COMBINED SPILL RESPONSE PLAN

Groundwater Pollution Prevention Plan GPP (3 yr)
Spill Prevention Control and Countermeasures Plan SPCC (5 yr)

Eastern Kentucky University

Facilities Services

Environmental Compliance and Energy Management

Plan Period:
January 1, 2017 to December 31, 2019

INTNTIONALLY LEFT BLANK FOR DUPLEXING

This document has been updated with current physical information for the period covered. There has been no substantial change within the University to cause alteration of the applicable regulations or the methods of compliance.

This document meets the requirements for the:

GPP	**Groundwater Pollution Prevention Plan**
SPCC	**Spill Prevention Control and Countermeasures Plan**

Applicable sections for each plan are listed in Appendix 25.

A separate EKU Stormwater Quality Management Plan (SWQMP) meets the following requirements:

BMP	**Stormwater Best Management Practices Plan**
SWPP	**Storm Water Pollution Prevention**

Questions should be directed to the Assistant Director of Environmental Compliance and Energy Management:

Bill Rhodes
bill.rhodes@eku.edu
office 859 622-4104
cell 859 893-2100

INTNTIONALLY LEFT BLANK FOR DUPLEXING

COMBINED SPILL RESPONSE PLAN: QUICK REFERENCE

EMERGENCY CHEMICAL RELEASE AND MATERIAL SPILL ACTIONS:

- **Spill Emergency** (Section 5.2)
- **Medical Emergency** (Section 5.3)
- **Fire Emergency** (Section 5.4)

MATERIAL SPILLED	REFER TO	CALL EKU POLICE 911 or 622-2821	CONTAIN SPILL	CLEAN UP SPILL
Any Spill	**Section 1.1**	All Staff All Students All Visitors	Spill Response Team	Spill Response Team
Oil/ Petroleum	**Section 1.5**	All Staff All Students All Visitors	Spill Response Team	Spill Response Team or Contractor
Chemical/ Material	**Section 1.6**	All Staff All Students All Visitors	Spill Response Team	Spill Response Team or Contractor

Spill Response Actions - Refer To:

- **IMMEDIATE Spill Decision Tree** **(Section 1.1)**
- CERCLA OR ECPRA Spill Reporting Decision Tree (Section 1.2)
- Emergency Phone No's. - Government Agencies (Section 1.3)
- Emergency Phone No's. - EKU (Section 1.4)
- Action Plans for Spilled Material
  - Oil/Petroleum (Section 1.5)
  - Chemical or Material Spill (Section 1.6)
- Regulatory Agency Notification Chart (Section 1.7)
  - Emergency Release Notification Chart
  - Clean Water Act (SPCC)
  - CERCLA
  - EPCRA
  - RCRA - TSCA
- Emergency Release Responsibility Assignments (Section 1.8)
- Plan Definitions and Acronyms (Section 1.9)

INTNTIONALLY LEFT BLANK FOR DUPLEXING

TABLE OF CONTENTS

Page

COMBINED SPILL RESPONSE PLAN: QUICK REFERENCE I

EMERGENCY CHEMICAL RELEASE AND MATERIAL SPILL ACTIONS: I

1.0 SPILL RESPONSE ACTIONS AND POLICY 1
- 1.1 Spill Decision Tree 2
- 1.2 CERCLA or EPCRA Reporting Decision Tree 3
- 1.3 Emergency Phone Numbers - Agencies [40 CFR 112.7(3)(vi)] 4
- 1.4 Emergency Phone Numbers - EKU [40 CFR 112.7(3)(vi)] 4
- 1.5 Action Plan - Oil/Petroleum Spill [40 CFR 112.7(5)] 5
- 1.6 Action Plan - Chemical /Material Release [29 CFR 1910.138] 6
- 1.7 Agency Notification Chart [40 CFR 112.7(4)] 7
- 1.8 Emergency Release Responsibility Assignments [40 CFR 112.7(4)] ... 9
- 1.9 PLAN DEFINITIONS AND ACRONYMS 10

2.0 FACILITY INFORMATION 12
- 2.1 Name and Address 12
- 2.2 Location - Latitude and Longitude 12
- 2.3 Type of Facility 12
  - 2.3.1 SIC 12
  - 2.3.2 NAICS 12
- 2.4 Location of Facility - County 12
- 2.5 Facility Drainage 12
- 2.6 Person Responsible for Implementing the GPP and SPCC 13
- 2.7 Designated Person(s) Responsible [40 CFR 112.7(f)(2)] 13
- 2.8 Person(s) Developing the GPP and SPCC 14
- 2.9 Facility Security [40 CFR 112.7(g)] 14
- 2.10 Hydrogeologic Setting 15

3.0 REGULATORY REQUIREMENTS 17
- 3.1 Applicable Regulations [40 CFR 112.1] 17
  - 3.1.1 Spill Prevention Control and Countermeasures Plan (SPCC) . 17
  - 3.1.2 Kentucky Groundwater Protection Plan (GPP) 17
  - 3.1.3 Kentucky Stormwater Permit 20
- 3.2 Plan Amendment, Review, and Submittal Requirements 20
  - 3.2.1 Prepare, Implement, and Review [40 CFR 112.3] 21
  - 3.2.2 Amendment of SPCC Plan by Regional Administrator [40 CFR 112.4] 21
  - 3.2.3 Amendment of SPCC Plan by Owner/Operator [40 CFR 112.5]22
- 3.3 Review Location for GPP & SPCC 22
- 3.4 Record Maintenance [40 CFR 112.7] 22
- 3.5 Plan Procedures 23
- 3.6 Emergency Response and Plan Responsibilities 23
  - 3.6.1 Plan Coordinator 23

3.6.2 Spill Committee and Responsibilities....23

4.0 REGULATED ACTIVITIES AND MATERIALS....25
4.1 Storage of Regulated Materials SPCC [40 CFR 112.7(a)] GPP (401 KAR 5:037 & 5:065)....25
4.2 Transfer of Petroleum Products (GPP, SPCC)....26
4.3 Solid Waste Storage and Disposal (GPP)....27
4.4 Storage of Special Waste (GPP)....28
4.5 Onsite Water or Wastewater Treatment Operations....28
4.6 Applying Fertilizers of Pesticides for Institutional Lawn Care....28

5.0 SPILL RESPONSE PROCEDURES AND NOTIFICATION [40 CFR 112.7(A)]....30
5.1 Emergency Spill Response - Responsibility Decision Tree....30
5.2 Emergency Response - Evacuation Due to Spill....32
5.3 Emergency Response - Injury....32
5.4 Emergency Response - Fire....33
5.5 Immediate Response -Non-Hazardous Small Spill of less than 55 gallons - 40 CFR 117.7(d)....33
5.6 Immediate Response Non-hazardous Large Spill greater than 55 gallons....34
5.7 Notification in Event of Spills [40 CFR 11.27(a)(4)]....35
5.8 Notification Contact List - Also Appendix 2.1....36
5.9 Spill Notification Form....37

6.0 EMERGENCY RESPONSE PROGRAM [40 CFR 112.7(A)]....38
6.1 EKU Response Organization....38
6.2 Response Equipment....38
6.3 Personal Protective Equipment....39
6.4 Visual Inspections [40 CFR 112.7(e)]....39
6.4.1 Visual Inspection - Bulk Storage Containers....40
6.4.2 Visual Inspection and Test Records....40

7.0 TRAINING....41
7.1 Training Operations Spill Response Team....41
7.2 Training for Spill Awareness for affected Employees....42
7.2.1 Employee Training - GPP....42
7.2.2 Employee Training - SPCC....43

8.0 SPILL POTENTIAL....44
8.1 Spill Potential Categories....44
8.2 Discharge Potential - Uncontrolled - Natural/Weather....45
8.3 Discharge Potential - Administrative....45
8.4 Discharge Potential - Structural [40 CFR 11.27(b)] SPCC GPP....46
8.5 Discharge Potential - Operational [40 CFR 112.7(b)] SPCC GPP....46

9.0 POLLUTION PREVENTION MEASURES AND CONTROLS....48
9.1 UST Preventative Structural Controls – GPP....48
9.2 Secondary Containment Preventative Structural Controls [40 CFR 112.8(c)] - SPCC....48
9.3 Preventive Practices - Application of Pesticides/Fertilizers....50

9.4 Preventive Practices - Pesticide Fertilizer Storage 51
9.5 Preventive Practices - Good Housekeeping 51
9.6 Preventive Practices - Maintenance Activities 52
9.7 Preventive Practices - Periodic Visual Inspections 53
9.8 Preventive Practices - Petroleum Loading/Unloading [40 CFR 112.7(h)] 54
9.9 Preventive Practices - Brittle Fracture [40 CFR 112.7(i)] SPCC 55
9.10 Preventive Practices - Petroleum Transfer Operations [40 CFR 112.8(d)] 55
9.11 Preventive Programs - Employee Training [40 CFR 112.7(f)] 56

10.0 CONTAINER INTEGRITY TESTING [40 CFR 112.7(C)(6)] 57
10.1 Container Integrity Testing Regulations 57
10.2 Bulk Container Integrity Testing Program [40 CFR 112.8] 58
10.3 Bulk Containers That Require Integrity Testing 58
10.4 Bulk Containers That Do Not Require Integrity Testing 59

11.0 COMBINED SPCC/GPP PLAN REVISIONS 61

12.0 PLAN CERTIFICATIONS [40 CFR 112.3] 62
12.1 ADMINISTRATIVE CERTIFICATION 62
12.2 REQUIRED - Administrative Approval -SPCC [40 CFR 112.3] 63
12.2.1 Assignment of SPCC Plan Responsibility 64
12.3 REQUIRED - Engineers Certification - SPCC [40 CFR 112.3(d)] 66
12.4 REQUIRED - Administrative Certification - SPCC - Harm Criteria 67
12.5 REQUIRED - Administrative Certification - GPP [401 KAR 5:037] 68

INTNTIONALLY LEFT BLANK FOR DUPLEXING

APPENDICES

APPENDIX 1	FIGURE 1 - SITE LOCATION ON TOPOGRAPHIC MAP
	FIGURE 2 - SITE LOCATION ON AERIAL MAP (OUTFALL 001)
	FIGURE 3 - SITE LOCATION ON GEOLOGIC MAP
	FIGURE 5 - TATES CREEK FAULTLINE
	FIGURE 5 - WET TRANSFORMER LOCATIONS
	FIGURE 6 - AST AND UST LOCATIONS
	FIGURE 7 - MIDDLETON COAL BIN
	FIGURE 8 - DONALDSON SANITARY & STORM SEWERS
	FIGURE 9 - COAL BIN SEDIMENT AND OIL SEPARATORS
APPENDIX 2	EMERGENCY PHONE NUMBERS
	EH&S OR FACILITIES SERVICES CONTACT GUIDE
	EMERGENCY ACTION PLAN
APPENDIX 3	EKU BUILDING KEY
	BULK MATERIAL CONTAINER AND CONTAINMENT DETAILS
	CHEMICAL STORAGE BUILDING MAINTENANCE MANUAL
	CHEMICAL STORAGE BUILDING DRAWING
	CHEMICAL STORAGE BUILDING ELECTRICAL
	ACADEMIC CHEMICALS INVENTORY
	FACILITIES SERVICES CHEMICAL LIST
	COAL BIN CAPACITY LETTER
APPENDIX 4	EKU NATURAL RISK CHARTS:
	EARTHQUAKE
	FLOOD
	TORNADO
APPENDIX 5	EPA SPCC INSPECTIONS & TESTING REQUIREMENTS
	MONTHLY INSPECTIONS CHECKLIST
	INDOOR AST MONTHLY INSPECTION FORM
	OUTDOOR AST MONTHLY INSPECTION FORM
	MCGREGOR HALL UST MONTHLY INSPECTION FORM
	CUSTODIAL PESTICIDES MONTHLY INSPECTION FORM
	BULK STORAGE MONTHLY INSPECTION FORM
	HAZARDOUS WASTE MONTHLY INSPECTION
	CHEMISTRY DEPARTMENT CHEMICALS MONTHLY INSPECTION
	OUTDOOR TRANSFORMERS MONTHLY INSPECTION FORM
	INDOOR TRANSFORMERS SEMI-ANNUAL INSPECTION FORM
APPENDIX 6	ANNUAL SITE COMPLIANCE EVALUATION FORM
	STORMWATER OUTFALL INSPECTION FORM

APPENDIX 7	SPCC BULK CONTAINER INVENTORY WORKSHEET
	AST RECORD FORM
	TANK INTEGRITY TESTING PROCEDURE
APPENDIX 8	MS_4 KPDES PERMIT COVER LETTER
	MS_4 KPDES PERMIT
APPENDIX 9	ESTILL COUNTY SOLID WASTE PERMIT
	ADVANCED DISPOSAL SOLID WASTE PERMIT
	SPENT LAMP / UNIVERSAL WASTE REQUIREMENTS
APPENDIX 10	TRAINING MATRIX
	RECORD OF SPILL TRAINING
	RIGHT-TO-UNDERSTAND SLIDE DISTRIBUTION NON-ATTENDEES
APPENDIX 11	SPILL NOTIFICATION DECISION TREE
	HAZARDOUS WASTE DISPOSAL PROCEDURE
APPENDIX 12	STANDARD OPERATING PROCEDURE - PETROLEUM SPILL
	SPILL NOTIFICATION FORM
APPENDIX 13	LIST OF SPILLS AND LEAKS LOG
APPENDIX 14	EMERGENCY RESPONSE GUIDE - PETROLEUM
APPENDIX 15	CERCLA HAZARDOUS SUBSTANCE LIST - 40 CFR 302.4 &302.5
APPENDIX 16	EPCRA HAZARDOUS SUBSTANCE LIST - 40 CFR 335.50
APPENDIX 17	CWA HAZARDOUS SUBSTANCE LIST - 40 CFR 117.3
APPENDIX 18	EPA LIST OF LISTS
APPENDIX 19	AGENCY GUIDANCE MEMOS
	U.S. COAST GUARD DEFINITION OF OIL
	EPA MEMO - SECONDARY CONTAINMENT
	EPA MEMO - SPCC INDUSTRY QUESTIONS
APPENDIX 20	SPCC REGULATIONS
	SP001 STANDARD
APPENDIX 21	KENTUCKY UST GUIDANCE MEMO
APPENDIX 22	GPP MEMOS
	GPP GUIDANCE
	GPP CONTENT GUIDANCE
APPENDIX 23	CURRENT SAFETY DATA SHEETS
APPENDIX 24	SPILL CONTRACTOR LETTER(S) OF AGREEMENT
APPENDIX 25	REGULATORY COMPLIANCE PLAN CHECKLISTS

1.0 SPILL RESPONSE ACTIONS AND POLICY

Eastern Kentucky University (hereafter EKU) has prepared this Spill Response Plan (SRP) to provide guidance to all STAFF, STUDENTS, VISITORS, AND CONTRACTORS in the event of a discharge of any chemical, petroleum, or raw material. This SRP has been prepared to address the plan requirements identified in the following regulations.

Oil Pollution Act - Spill Response Control and Countermeasures Plan (SPCC)
Kentucky Water Regulations - Groundwater Protection Plan (GPP)

Spill Response Policy is as follows:

ONLY STAFF or INDIVIDUALS WITH DOCUMENTED PROPER TRAINING WILL RESPOND TO MATERIAL SPILLS

EKU has communicated or will communicate the elements of this plan and document that communication to all employees, students, and contractors:

1) Whose job function and activity could contribute to contamination of groundwater or stormwater if they fail to properly follow procedures,
2) Who are required to respond to material spills or releases,
3) Who have been designated by EKU as responsible for emergency response actions which could result in incident command over a chemical, material, or petroleum spill or release incident.

All staff, students, and contractors are trained to notify EKU POLICE at 911 or 622-2821 in the event of a spill or release. Only trained staff or individuals will implement spill control and cleanup actions.

Emergency response actions to a spill of material at EKU are summarized in Section 1.1 of this plan and described in more detail in the body of this combined plan. **Immediate spill response actions** are detailed in **Sections 1.3, 1.5 and 1.6.**

1.1 Spill Decision Tree

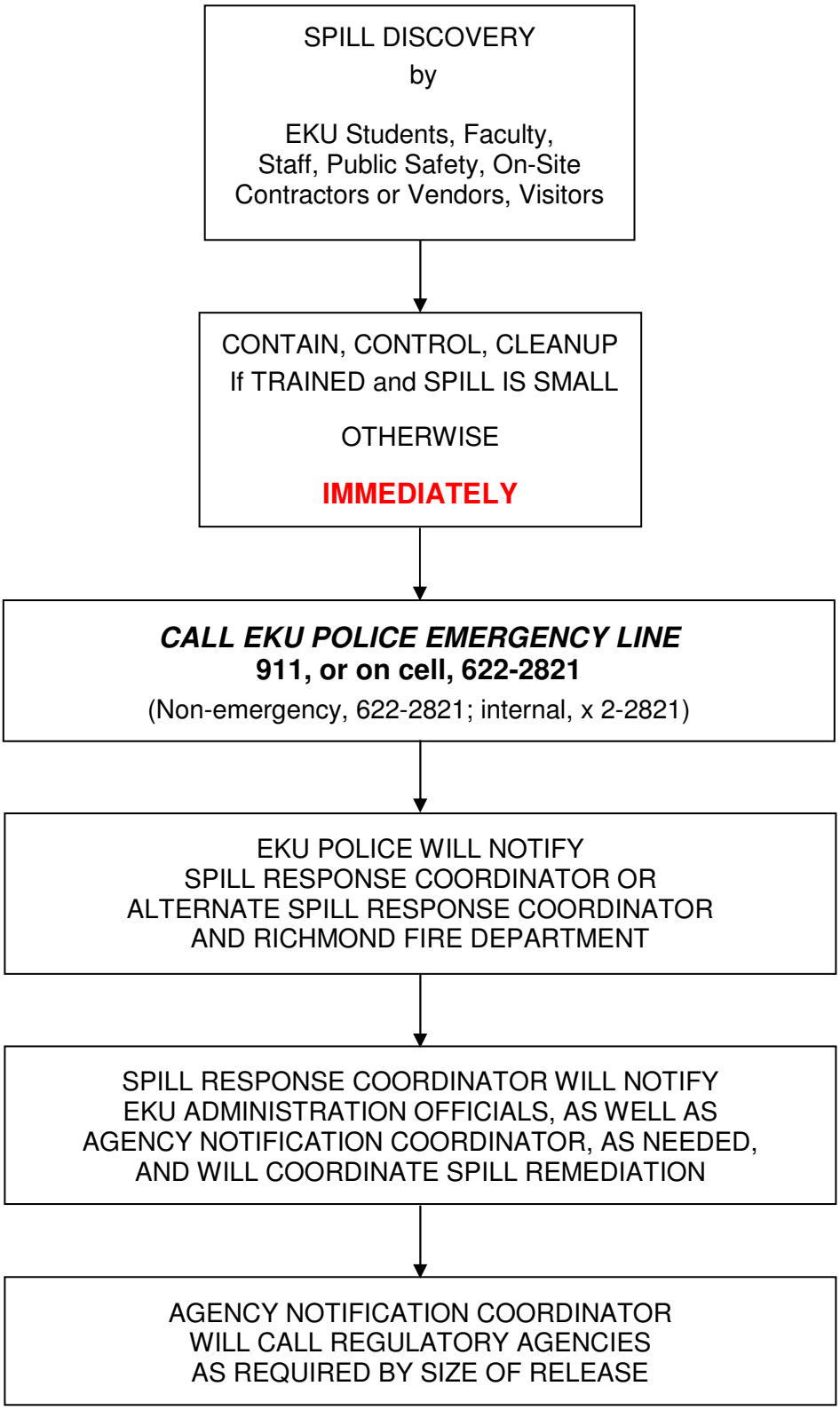

1.2 CERCLA or EPCRA Reporting Decision Tree

SPILL NOTIFICATION DECISION TREE - CERCLA or EPCRA RELEASES

1	WHAT SPILLED - EPCRA EHS, CERCLA HS, or CWA HS MATERIAL or
2	WHICH PROGRAM IS CHEMICAL UNDER?

3	Appendix 16 - EPCRA EHS 40 CFR 355.50	Appendix 15 - CERCLA HS 40 CFR 302.4	Appendix 17 -CWA HS 40 CFR 117.3

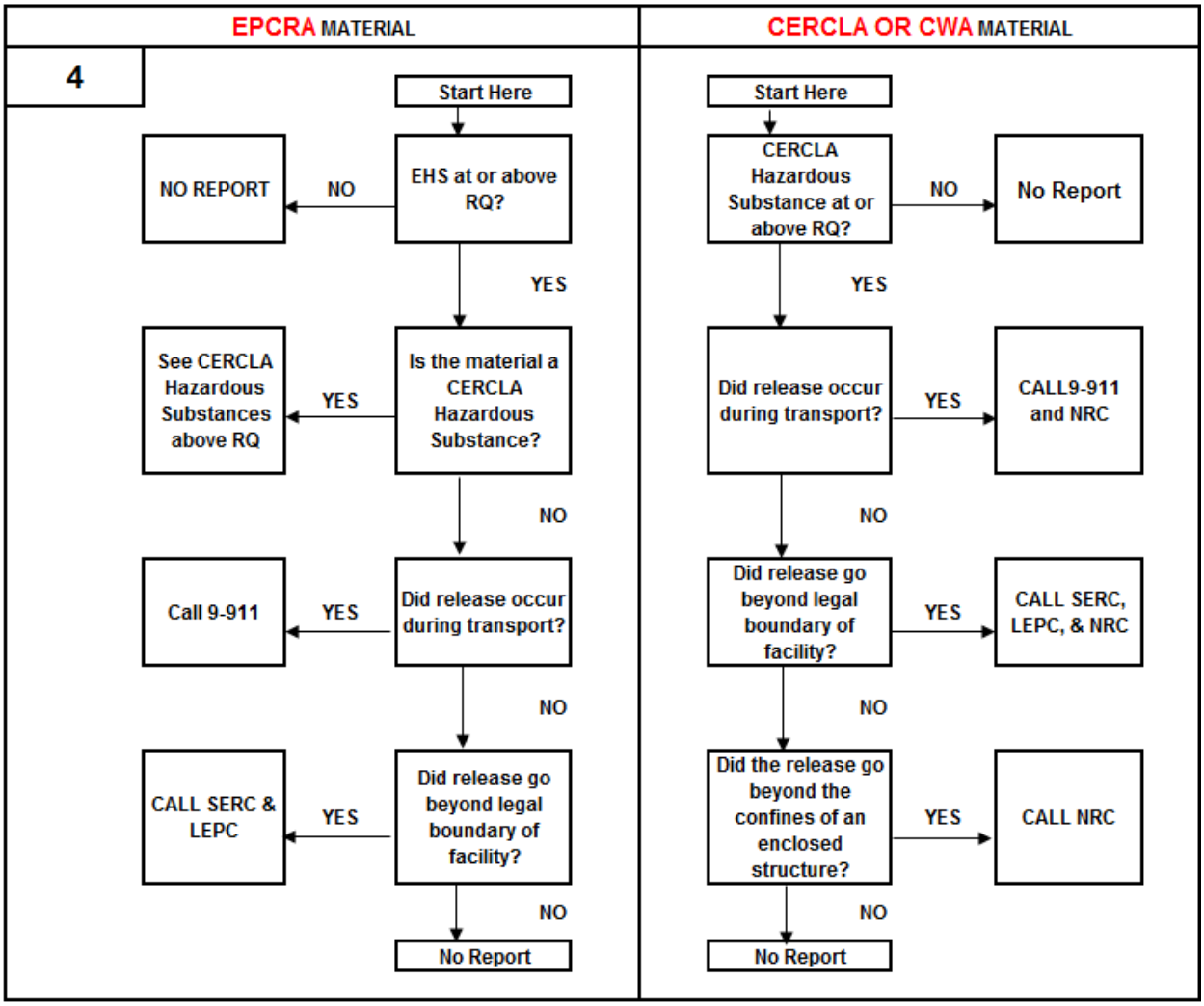

Emergency Phone Numbers

LEPC	LEPC Phone No.	911
NRC	National Response Center Phone No.	1-800-424-8802
KYERT	Kentucky Emergency Response Team	1-800-928-2380

PETROLEUM RELEASE TO ENVIRONMENT - REPORTING

25 Gallons of Petroleum in 24-hours	IMMEDIATE PHONE CALL TO KYERT and NRC
75 Gallons of Diesel Fuel	
Sheen on Waters of the US (off property)	

1.3 Emergency Phone Numbers - Agencies [40 CFR 112.7(3)(vi)]

Emergency Phone Numbers	
Richmond - Fire	911 land line; cell call 859 624-4776
Richmond - Police	911 land line; cell call 859 624-4776
Richmond - Medical	911 land line; cell call 859 624-4776
Kentucky Environmental Emergency Response Hotline	(502) 564-2380 or (800) 928-2380
National Response Center (NRC)	(800) 424-8802
Richmond Utilities (Gas, Water, Sewer)	(859) 623-2323
Kentucky Division of Water	(502) 564-3410
Kentucky Division for Air Quality	(502) 573-3382
Kentucky Division of Waste Management	(502) 384-4734
Spill Response Contractor: PECCO, Inc.	(859) 887-5508

1.4 Emergency Phone Numbers - EKU [40 CFR 112.7(3)(vi)]

Spill Respondents	
EKU Police Department (Spill Response Dispatch)	911 (859) 622-1111 (cell)
Spill Response Coordinator: Bryan Makinen – Executive Director of Public Safety and Risk Management	(859) 622-2421 (work) (859) 893-6503 (cell)
Alternate Spill Response Coordinator: Gary Folckemer - Director, Emergency Management & Security	(859) 622-8987 (work) (859) 625-8370 (cell)
Agency Notification Coordinator: Bryan Makinen – Executive Director of Public Safety and Risk Management	(859) 622-2421 (work) (859) 893-6503 (cell)
Alternate Notification Coordinator: Paul Gannoe – Assoc VP, Fac Serv & Cap Planning	(859) 622-1497 (work) (502) 330-7872 (cell)

1.5 Action Plan - Oil/Petroleum Spill [40 CFR 112.7(5)]

PETROLEUM SPILL ACTION PLAN Oil, Diesel or Gasoline			
Spill Classification:	Small < 5 gallons	Medium 5 to 55 gallons	Large Over 55 gallons
Personnel	**Action**		
EKU Police	Assess spill based on phone call from release site **Call Spill Response Coordinator, or, if cannot be reached:** **Call Alternate Spill Response Coordinator** Conduct ON SCENE Operations as required by SPILL INCIDENT		
Students/Faculty/Staff	**IF NOT TRAINED, EVACUATE AREA - CALL EKU POLICE**		
Visitors/Contractors/Vendors	**IF NOT TRAINED, EVACUATE AREA - CALL EKU POLICE**		
SPILL TRAINED Facilities Services Personnel and other trained Staff, Faculty and Contractors or Vendors	Contain, Control, Cleanup, Notify EKU Project Manager	Contain & Control	Contain and Control
Spill Response Coordinator/ Alternate Spill Response Coordinator	Implement Incident Command and Control, Safely Assess Scene Contact Local (Regional) Haz Mat Team Implement Remediation thru Waste Disposal Actions Coordinate Agency Notifications (as needed) Contact Spill Contractor based on SCOPE OF SPILL INCIDENT		
Spill Response Team	Based on SPILL INCIDENT ASSESSMENT - Using Proper PPE, Contain, Control, Cleanup, and perform Waste Material Storage / Disposal Support Response Contractor as needed		
Spill Contractor	AS NEEDED - Contain, control, cleanup, label waste containers, store waste containers, prepare waste / haz waste manifests, transport waste, dispose of waste consistent with RCRA regulations, return paperwork to Spill Response Coordinator		

Spill Response and Agency Notification Coordinator: Bryan Makinen - Executive Director of Public Safety and Risk Management	(859) 622-2421 (work) (859) 893-6503 (cell)
Alternate Spill Response Coordinator: Gary Folckemer - Director, Emergency Management & Security	(859) 622-8987 (work) (859) 625-8370 (cell)
External Contacts: • National Response Center (NRC) • KY Emergency Response Commission • KY Department for Environmental Protection - Division of Water	 (800) 424-8820 (800) 564-7815 (800) 564-2380
Spill Response Contractor: PECCO, Inc.	(859) 887-5508

1.6 Action Plan - Chemical /Material Release [29 CFR 1910.138]

CHEMICAL OR MATERIAL SPILL ACTION PLAN			
Spill Location:	Chemistry Department		Other
Spill Classification:	Small < 0.5 liters	Large 0.5 liters and up	Any
Personnel	**Action**		
EKU Police	Assess spill based on phone call from release site **Call Spill Response Coordinator, or, if cannot be reached:** **Call Alternate Spill Response Coordinator** Conduct ON SCENE Operations as required by SPILL INCIDENT		
Students/Faculty/Staff	**IF NOT TRAINED, EVACUATE AREA - CALL EKU POLICE**		
Visitors/Contractors/Vendors	**IF NOT TRAINED, EVACUATE AREA - CALL EKU POLICE**		
SPILL TRAINED Students	Contain, Control, Cleanup and Dispose - Follow LAB WASTE DISPOSAL PROCEDURE		**EVACUATE AREA - CALL EKU POLICE**
SPILL TRAINED Facilities Services Personnel and other trained Staff, Faculty, and Students	Contain, Control, Cleanup and Dispose - Follow LAB WASTE DISPOSAL PROCEDURE		Contain and Control
SPILL TRAINED Contractors or Vendors	Contain, Control, Cleanup, Notify EKU Project Manager	Contain & Control	Contain and Control
Spill Response Coordinator/ Alternate Spill Response Coordinator	Implement Incident Command and Control, Safely Assess Scene Contact Local (Regional) Haz Mat Team Implement Remediation thru Waste Disposal Actions Coordinate Agency Notifications (as needed) Contact Spill Contractor based on SCOPE OF SPILL INCIDENT		
Spill Response Team	Based on SPILL INCIDENT ASSESSMENT - Using Proper PPE, Contain, Control, Cleanup, and perform Waste Material Storage / Disposal Support Response Contractor as needed		
Spill Contractor	AS NEEDED - Contain, control, cleanup, label waste containers, store waste containers, prepare waste / haz waste manifests, transport waste, dispose of waste consistent with RCRA regulations, return paperwork to Spill Response Coordinator		

Spill Response and Agency Notification Coordinator: Bryan Makinen - Executive Director of Public Safety and RM	(859) 622-2421 (work) (859) 893-6503 (cell)
Alternate Spill Response Coordinator: Gary Folckemer - Director, Emergency Management & Security	(859) 622-8987 (work) (859) 625-8370 (cell)
External Contacts: • National Response Center (NRC) • KY Emergency Response Commission • KY Department for Environmental Protection - Division of Water	 (800) 424-8820 (800) 564-7815 (800) 564-2380
Spill Response Contractor: PECCO, Inc.	(859) 887-5508

1.7 Agency Notification Chart [40 CFR 112.7(4)]

The Spill Response Coordinator and the EKU Police can use the following chart to determine if the release is a REPORTABLE QUANTITY (RQ) and subsequently reportable to an agency (see Agency Notification Phone Numbers in Section 1.3 of this Plan).

- CERCLA Hazardous Substance RQ are listed in Appendix 15
- EPCRA Extremely Hazardous Substance RQ are listed in Appendix 16
- CWA Hazardous Substance RQs are listed in Appendix 17

Type of Material	**Spill Activity**	Quantity (qty.) See Note 2.	Employees aware of spill should immediately notify:		Agency Notification Coordinator should take the following actions
			Spill Response Coordinator (page 5)	**Richmond Utilities (page 4)**	
Fuel (e.g. gasoline, diesel), Used Oil	Entered floor or street drains	Any qty.	X	X	See Note 1
	Entered drainage ditch, river or stream	Any qty.	X	X	See Note 1
	Entered soil	Any qty.	X		See Note 1
	100% contained on pavement or within the secondary containment system	≥ 50 gallons	X		See Note 1
		≤ 50 gallons	X		No action
Hazardous Substances	Entered floor or street drains	≥ reportable qty. found in 40 CFR 302.4	X	X	See Note 1
	Entered drainage ditch, river or stream	≥ reportable qty. found in 40 CFR 302.4	X	X	See Note 1
	Entered soil	≥ reportable qty. found in 40 CFR 302.4	X		See Note 1
	Contained or non-contained spill	≥ reportable qty. found in 40 CFR 302.4	X		See Note 1
	Contained or non-contained spill	< reportable qty. found in 40 CFR 302.4	X		No action
Extremely Hazardous Substances 40 CFR 355.50	Entered floor or street drains	≥ reportable qty. found in 40 CFR 302.4 or 40 CFR 355 Appendices 15 & 16	X	X	See Note 1

	Entered drainage ditch, river, or stream	≥ reportable qty. found in 40 CFR 302.4 or 40 CFR 355 Appendices 15 & 16	X	X	See Note 1
	Entered or Contaminated soil	≥ reportable qty. found in 40 CFR 302.4 or 40 CFR 355 Appendices 15 & 16	X		See Note 1
	Contained or non-contained spill	≥ reportable qty. found in 40 CFR 302.4 or 40 CFR 355 Appendices 15 & 16	X		See Note 1
	Contained or non-contained spill	< reportable qty. found in 40 CFR 302.4 or 40 CFR 355 Appendices 15 & 16	X		No action

X Take the action specified in the column

Note 1 - Spill Response Coordinator/Incident Commander will immediately notify the following:

- National Response Center (NRC) 1800-424-8802
- KY Dept. of Natural Resource's Emergency Response Hotline 800-928-2380
- Local Emergency Planning Commission (LEPC) 911

Note 2 - See "List of Lists" - US EPA chemical specific reporting requirements. Current US EPA List of Lists is included Appendix 18

1.8 Emergency Release Responsibility Assignments [40 CFR 112.7(4)]

The following chart describes the typical response actions to a release of regulated materials at this facility. Staff responsibilities for emergency actions are described below by job description or job title:

Emergency Action	Primary Person(s) Authorized to Implement Action - Job Description	Employee Name or Title
1. **NOTIFY EKU Police** of a fire, medical emergency, spill, release, or material discharge	All Staff	All Employees
2. **CONTAIN** Using - Spill Pads, Apply Absorbent, Spill Booms, Plug Storm Sewer Line, Drain Covers	Small Spill - Trained Staff Other Spill - Spill Response Team	Trained Employees Only
3. **EVACUATE** if needed	Spill Response Coordinator, Alternate Spill Response Coordinator	EKU Police, Executive Director of Public Safety and RM, Assistant Director Facilities Services
4. Call 911 - fire, police, ambulance	All Staff EKU Police	All Employees EKU Police
5. Incident Command - Assess Spill	Initial - EKU Police Final - Spill Response Coordinator or Alternate	Executive Director of Public Safety and RM, Assistant Director Facilities Services
6. **CONTROL** Spill Using - plugs, dikes, dams, and stop flow	Spill Response Coordinator or Alternate, Trained Staff on Spill Response Team	Executive Director of Public Safety and RM, Assistant Director Facilities Services, Safety Trained Employees Only
7. **Notify** University Administration and Legal Department **Notify EKU** Public Relations Officer	Spill Response Coordinator, Alternate Spill Response Coordinator	Executive Director of Public Safety and Risk Management, Assistant Director Facilities Services
8. **NOTIFY** Local Agencies - LEPC, Fire, Police; Notify State Agencies - SERC, Ky. Emergency Response Hotline, Div Water, Div Waste, Div Air; Notify Federal Agencies - NRC	Spill Response Coordinator or University Administrator	Executive Director of Public Safety and Risk Management, Assistant Director Facilities Services
9. CLEANUP SPILL	Spill Response Coordinator Directs Spill Response Contractor	Spill Response Contractor
10. DISPOSE OF SPILL	Spill Response Coordinator Directs Spill Response Contractor	Spill Response Contractor

1.9 PLAN DEFINITIONS AND ACRONYMS

ACRONYM	DESCRIPTION or DEFINITION as used in this Plan
ACM	Asbestos-Containing Material
ANSI	American National Standards Institute
API	American Petroleum Institute
ASHRAE	American Society of Heating, Refrigeration and Air Conditioning Engineers
ASTM	American Society for Testing and Materials
ATSDR	Agency for Toxic Substances and Disease Registry
BOD	Biological Oxygen Demand
BTU	British Thermal Units
CAAA	Clean Air Act Amendments
CAS	Chemical Abstract Service
CERCLA	Comprehensive Environmental Response Compensation Liability Act of 1980 (amended in 1984 and later)
CFR	Code of Federal Regulations
CHEMTREC	Chemical Transportation Emergency Center
COD	Chemical Oxygen Demand
CWA	Clean Water Act
DMR	Discharge Monitoring Reports
DO	Dissolved Oxygen
DOT	Department of Transportation
EMS	Environmental Management System (also see ISO14000)
EPA	Environmental Protection Agency
EPCRA	Emergency Planning and Community Right-to-Know Act
FIFRA	Federal Insecticide, Fungicide and Rodenticide Act
FR	Federal Register
GPP	Groundwater Protection Plan
HAP	Hazardous Air Pollutant
HAZCOM	29 CFR 1910.1200 OSHA Hazardous Communication Standard requiring employers to communicate MSDS/material to employees
HAZWOPER	29 CFR 1910.120 - the OSHA / EPA requirement to have all employees trained if they will be handling, managing or shipping hazardous wastes
HCFC	Hydrofluorochlorocarbon
HM	Hazardous Material
HWM	Hazardous Waste Management
ID	(as in ID number) - Hazardous Waste Identification Number assigned to RCRA generators, transporters, and TSDFs
KDAQ	Kentucky Division for Air Quality
KDOW	Kentucky Division of Water
KDWM	Kentucky Division of Waste Management
KPDES	Kentucky Pollutant Discharge Elimination System
LEPC	Local Emergency Planning Committee
LQG	Large Quantity Generator of hazardous wastes - this term has a specific definition under RCRA!
LWHUW	Large Quantity Handlers of Universal Waste (haz wastes)
LUST	Leaking Underground Storage Tanks
MCL	Maximum Concentration Limit or Level
MSDS	Material Safety Data Sheet (under OSHA)
MSW	Municipal Solid Waste (trash, nonhazardous waste, etc.)
NAAQS	National Ambient Air Quality Standards

NESHAP	National Emissions Standard for Hazardous Air Pollutants
NFPA	National Fire Protection Association
NIH	National Institute for Health
NIOSH	National Institute of Occupational Safety and Health
NPDES	National Pollution Discharge Elimination System
NRC	National Response Center
OSHA	Occupational Safety and Health Administration (29 CFR)
PCB	Polychlorinated biphenyl - A toxic cooling oil used in the past in transformers and capacitors
PEL	Permissible Exposure Limit
POTW	Publicly Owned Treatment Works
PPB	Parts Per Billion
PPE	Personal Protective Equipment (such as gloves, respirators, etc.)
PPM	Parts Per Million
RCRA	Resource Conservation and Recovery Act of 1976 - resulted in hazardous waste regulations - 40 CFR Parts 260 to 280
RQ	Reportable Quantity
RUST	RCRA Underground Storage Tanks
SARA	Superfund Amendments and Reauthorization Act
SDWA	Safe Drinking Water Act of 1974
SERC	State Emergency Response Commission
SPCC	Spill Prevention Control and Countermeasures
SQG	Small Quantity Generator of hazardous wastes (has a specific definition!)
SQHUW	Small Quantity Handlers of Universal Waste (haz waste)
TPQ	Threshold Planning Quantity (CERCLA community right-to-know)
TSCA	Toxic Substances Control Act of 1976 - regulates asbestos, PCBs, new chemicals being developed for sale and other chemicals
TSS	Total Suspended Solids
TWA	Time Weighted Average
UST	Underground Storage
VA	Vulnerability Assessment
VOC	Volatile Organic Compounds

2.0 FACILITY INFORMATION

2.1 Name and Address

Owner

Eastern Kentucky University
521 Lancaster Avenue
Richmond, Kentucky 40475-3102

Facility

Same as above

2.2 Location - Latitude and Longitude

The facility is shown on the Topo Map (See Appendix 1 Figure 1) and is located at the following latitude and longitude: 37° 44' 07.88" N / 84° 17' 26.44" W
(Note this data is for the location of Outfall 001 from the Coal Pad)

2.3 Type of Facility

The facility is a University.

2.3.1 SIC

The facility is classified under the Standard Industry Code Classification as 8221 - Colleges, Universities, and Professional Schools

2.3.2 NAICS

The facility is classified under the North American Industry Classification System as 611310 - Colleges, Universities, and Professional Schools.

2.4 Location of Facility - County

The facility is located on 892 acres in the city of Richmond, Kentucky; Madison County. See Section 2.2 for Latitude Longitude.

2.5 Facility Drainage

All ultimately discharge to the Kentucky River.

EKU has vegetation in all areas of campus not covered by buildings, road surface, parking lots, or material storage pads. The University Campus has three outfalls of

stormwater discharge. Generally, surface flow north of Alumni Coliseum flows into the Richmond City storm sewer, as well as to an outfall that is adjacent the railroad track on the far eastern edge of campus, and from there, flowing north along the eastern border of the Richmond Cemetery and into Dreaming Creek, and on to Otter Creek and the Kentucky River. Surface flow south of Alumni Coliseum also flows into the Richmond City storm sewer, as well as to two adjacent outfalls just east of the Madison County EMS and south of the Eastern Bypass, and from there to Taylor Fork, then Wilgreen Lake, and on to the Kentucky River. (see Appendix 1, Figures 1 & 3)

Release of materials from the Gentry Building (facilities operations area) flows to the Dreaming Creek outfall.

2.6 Person Responsible for Implementing the GPP and SPCC

The Owner/Operator has the overall responsibility for administering and implementing the facility's oil spill prevention program, stormwater protection plan, and groundwater protection plan:

Mr. Barry Poynter - Vice President, Finance & Administration
Phone: (859) 622-5012

2.7 Designated Person(s) Responsible [40 CFR 112.7(f)(2)]

The following persons have been delegated the operational responsibility of maintaining the GPP and SPCC plans and implementing specific actions to conform with the plans:

Mr. Paul Gannoe - Associate VP, Facilities Services & Capital Planning
Phone: (859) 622-1497

Mr. Bryan Makinen - Executive Director of Public Safety & Risk Management
Phone: (859) 622-2421

This delegation is in writing and forms the basis for the University's compliance with the following applicable Federal and State Laws and regulations:

1. Oil Pollution Act - 40 CFR 112 - SPCC Plan
2. Kentucky GPP Regulation - 401 KAR Chapter 5:037 - GPP Plan

For purposes of this plan, the responsibility for plan administration has been assigned to the Associate VP, Facilities Services & Capital Planning. His role will be to keep the

plan document current and certified and to insure required training. For purposes of this combined plan, the operational responsibility for Spill Response Coordinator and Environmental Coordinator has been assigned to the Executive Director of Public Safety & Risk Management. His role will be to implement the operational plan elements, insure periodic inspections and maintain required inspection records, direct the site emergency response to spills or releases of materials, oversee remediation and recovery actions resulting from spills and releases of regulated substances subject to these three regulatory areas and provide response notifications to agencies as required, both verbal and written.

2.8 Person(s) Developing the GPP and SPCC

Fred Rial, PE Tetra Tech, Inc. under authority of
Bill Rhodes - Assistant Director, EKU Facilities Services
Tetra Tech Project No. 200-11693-07001
800 Corporate Drive, Suite 100
Lexington, KY 40503
859 223-8000

Updates:
Bill Rhodes - Assistant Director, EKU Facilities Services
Gentry Building / CPO 6A-1
521 Lancaster Ave.
Richmond, KY 40474-3102
859 622-4104

2.9 Facility Security [40 CFR 112.7(g)]

The campus is open to the public via public and University-owned roads. Entry into individual buildings is controlled by one or more of the following: building security staff, building receptionists with secure lobby access, key card access, key pad access, locked gates with key access, locked fences, and fence(s) around the property buildings and areas. During normal business hours, all commercial vehicles delivering campus

goods will go to the L.O. Martin Building for delivery of campus support materials, chemicals, and goods. Deliveries to the science department, boiler operation, cafeteria operation, and administration building will occur at the receiving docks of those respective buildings. The campus coal storage facility is open to the public and is monitored by 24-hour cameras and campus police patrols.

2.10 Hydrogeologic Setting

Geology and Hydrology

EKU is located in Richmond, Kentucky on 892 acres of land. According to the Natural Resources Conservation Service's website, soils underlying the campus area all consist of silty loams and are of the Caleast, Faywood, Lowell, Newark, and Shelbyville Series. Loamy material is typically a permeable soil composed of clay, silt, sand, and organic matter.

The campus is split into two different bedrock settings due to the Tates Creek Fault. The Tates Creek Fault is a northwest-southeast trending fault that extends from the Blue Grass Army Depot property in Madison County into Fayette County. Within Richmond, it runs just north of Crabbe Street to Oak Street on the west and Mayfield Elementary on the east. Because the north side of the fault is the downthrown side of the fault, a portion of EKU's campus is underlain by the Drakes Formation, as well as the upper and lower parts of the Ashlock Formation. The Drake Formation consists of dolomite, shale, and limestone, whereas the upper and lower Ashlock Formations consist primarily of limestone and dolomite. These three bedrock types are all part of the Upper Ordovician Richmond Formation. The area south of the fault is underlain by only the upper and lower parts of the Ashlock Formation.

Although limestone weathering can typically lead to karstic features such as sinkholes and caves, this is not a mature karst area. Upon review of the geologic map of the area, there does not appear to be any such features on the subject area. However, there are minor sinkhole depressions located to the east and south of the subject site.

The geologic map shows a spring that originates just south of the Eastern By-Pass and west of Kit Carson Drive (coordinates 37º 43' 54", 84º 17' 52"; similar to Outfall #3). According to the Kentucky Geological Survey's website, another spring (KGS spring #3570, coordinates 37º 43' 05", 84º 17' 35"; south of Outfall #3) is located on the southern portion of the subject property. It is unknown if these springs are connected to a karst feature off-site without conducting a thorough dye trace study.

In the event that a spill does occur on the subject property, there does not appear to be any sinkholes that could be impacted, which could lead to subsurface conduits causing extensive off-site contaminant migration. However, potential subsurface pathways could be fractures associated with the fault along the northern portion of the campus. If a spill occurs within the fault zone and the overburden is thin, contaminants may enter a fracture and travel along the fracture for an unknown distance, possibly off-site. A fracture associated with the fault may also connect with a conduit leading to a spring, a surface water feature, such as a pond or creek, or even deeper to impact the groundwater. Therefore, it is recommended that storage and handling of materials not be conducted near the fault zone at the northern end of Kit Carson Drive or near Madison Drive.

3.0 REGULATORY REQUIREMENTS

This Combined Regulatory Plan combines the administrative requirements, spill response actions, plan elements, training requirements, and reporting requirements of the following:

1. SPCC Plan - Code of Federal Regulation, Chapter 40, Section 112 (40 CFR 112)
2. GPP Plan - Kentucky Groundwater Protection Plan Regulation (401 KAR 5:037)

Applicable regulations and administrative compliance requirements are discussed in this section of the plan. Copies of plan guidances are provided in Appendix 22.

3.1 Applicable Regulations [40 CFR 112.1]

3.1.1 Spill Prevention Control and Countermeasures Plan (SPCC)

40 CFR 110, promulgated in November 1976, prohibits the discharge of oil into or upon navigable waters of the U. S. or adjoining shorelines or into or upon the waters of the contiguous zone in such quantities that it has been determined may be harmful to the public health or welfare of the U.S. The Oil Pollution Act identifies in 40 CFR 112 the specific requirements, procedures, methods, and/or equipment that facilities must implement in a spill prevention control and countermeasures plan to prevent the discharge of harmful quantities of oil into or upon waters of the U. S.

This facility stores over 1,000 gallons of petroleum in bulk containers and is therefore subject to the federal regulations that require EKU to prepare and implement a written Spill Prevention Control and Countermeasures (SPCC) Plan under 40 CFR 112.6, including certification by a licensed Professional Engineer.

3.1.2 Kentucky Groundwater Protection Plan (GPP)

Kentucky Administrative Regulation (KAR), 401 KAR 5:037, define those activities that require a facility to prepare and implement a groundwater protection plan (GPP). The

following chart summarizes activities that are applicable or not applicable at EKU. The specific activities that apply are identified in the following chart with the term "Applies" in the first column. Those activities that do not apply at EKU are noted with "NA."

KENTUCKY GROUNDWATER PROTECTION PLAN REQUIREMENTS	
Applies or NA	**Per 401 KAR 5:037 Section 2) - Facilities conducting any of the following activities shall prepare and implement a groundwater protection plan:**
NA	(a) Storing or related handling of bulk quantities of pesticides or fertilizers for commercial purposes;
NA	(b) Storing or related handling of bulk quantities of pesticides or fertilizers for the purpose of distribution to a retail sales outlet;
NA	(c) Applying of pesticides or fertilizers for commercial purposes;
Applies	(d) Applying of fertilizers or pesticides for public right-of-way maintenance or institutional lawn care;
NA	(e) Land treatment or land disposal of a pollutant;
Applies	(f) Storing, treating, disposing, or related handling of hazardous waste, solid waste, or special waste in landfills, incinerators, surface impoundments, tanks, drums or other containers, or in piles;
Applies	(g) Commercial or industrial storing or related handling in bulk quantities of raw materials, intermediate substances or products, finished products, substances held for recycling, or other pollutants held in tanks, drums or other containers, or in piles;
NA	(h) Transmission in pipelines of raw materials, intermediate substances or products, finished products, or other pollutants;
NA	(i) Installation or operation of on-site sewage disposal systems;
Applies	(j) Storing or related handling of road oils, dust suppressants, or deicing agents at a central location;
Applies	(k) Application or related handling of road oils, dust suppressants or deicing materials;
NA	(l) Mining and associated activities;
NA	(m) Installation, construction, operation, or abandonment of wells, bore holes, or core holes;
NA	(n) Collection or disposal of pollutants in an industrial or commercial facility through the use of floor drains which are not connected to on-site sewage disposal systems, closed-loop collection or recovery systems, or a waste treatment system permitted under the Kentucky Pollutant Discharge Elimination System;
NA	(o) Impoundment or containment of pollutants in surface impoundments, lagoons, pits, or ditches; or
NA	(p) Commercial or industrial transfer, including loading and unloading, in bulk quantities of raw materials, intermediate substances or products, finished products, substances held for recycling, or other pollutants.

The Kentucky groundwater protection plan regulations identify several exclusions that result in a facility not being required to prepare a GPP for those listed activities. The following chart identifies exemptions to the GPP plan requirements as they relate to EKU activities. Those exclusions to preparing a GPP are noted with the term "Applies."

KENTUCKY GROUNDWATER PROTECTION PLAN EXCLUSIONS	
Applies or NA	**Per 401 KAR 5:037 Section 3) - Exclusions from preparing and implementing a groundwater protection plan:**
NA	(3) General exclusion. Any person who conducts an activity identified in subsection (2) of this section shall not be required to prepare or to implement a groundwater protection plan for that activity if that person can demonstrate by substantial evidence based on the factors set forth in this subsection, the activity has no reasonable potential of altering the physical, thermal, chemical, biological, or radioactive properties of the groundwater in a manner, condition, or quantity that will be detrimental to the public health or welfare, to animal or aquatic life, to the use of groundwater as present or future sources of public water supply or to the use of groundwater for recreational, commercial, industrial, agricultural, or other legitimate purposes. The demonstration shall at a minimum consider the following factors: (a) Hydrogeologic sensitivity at or near the location of the activity; (b) Quantity of the pollutants, including the cumulative potential to pollute from small discharges, spills, or releases which individually would not have the potential to pollute; (c) Physical, chemical, and biological characteristics of the pollutants such as solubility, mobility, toxicity, concentration, and persistence; (d) Use of the pollutants at the locations of the activities; and (e) Present and potential uses of the groundwater.
GPP SPECIFIC EXCLUSIONS	
Applies	(a) Normal use or consumption of products sized and packaged for personal use by individuals;
NA	(b) Retail marketing of products sized and packaged for personal use or consumption by individuals;
Applies	(c) Activities conducted entirely inside enclosed buildings if: 1. The building has a floor sufficient to prevent the release of pollutants to groundwater; and 2. There are no floor drains, or all floor drains within the building are connected to an on-site sewage disposal system, closed-loop collection or recovery system or a waste treatment system permitted under the Kentucky Pollutant Discharge Elimination System;
NA	(d) Storing, related handling, or transmission in pipelines of pollutants that are gases at standard temperature and pressure;
Applies	(e) Storing municipal solid waste in a container located on property where the municipal solid waste is generated and which is used solely for the purpose of collection and temporary storage of that municipal solid waste prior to off-site disposal;
Applies	(f) Installing and operating sewer lines or water lines approved by the cabinet;
NA	(g) Storing water in ponds, lakes or reservoirs;
NA	(h) Impounding stormwater, silt, or sediment in surface impoundments;
NA	(i) Application of chloride-based deicing materials used on roads or parking lots;
Applies	(j) Emergency response activities conducted in accordance with local, state, and federal law;

The specific activities at this facility that require a GPP are: storing or handling of chemicals, materials, solid waste in tanks, drums, and other containers or in piles; application of fertilizer, herbicides, pesticides; and application of deicing materials. Bulk is defined in the Kentucky GPP regulation as 55-gallon drums or 100-pound dry weight packages.

EKU conducts specific activities that involve the storage, treatment, or transport of bulk materials. Specific details of container volume, contents, location and containment / control structures are shown in Appendix 3.2 - Bulk Material Container and Containment Details. Specific activities conducted at EKU are shown in Appendix 1, Figure 4 - Wet Transformer Locations and Figure 5 - AST and UST Locations. The activities subject to GPP plan development include the following:

- Storage of lubricating oil, motor oil, and antifreeze in 55-gallon containers
- Storage of coal in a bulk pile (10,000 tons)
- Storage of diesel and gasoline
- Storage of used lubricating oil and motor oil in 55-gallon containers
- Storage of chemicals for lawn application
- Storage of chemicals for boiler water treatment
- Storage of deicer for use on roads and parking lots
- Disposal of solid waste on site

3.1.3 Kentucky Stormwater Permit

EKU maintains a separate SWQMP to comply with the KPDES MS_4 Permit No. KYG00000.

3.2 Plan Amendment, Review, and Submittal Requirements

The SPCC portion of this plan needs to be reviewed, approved, and certified (See Section 14) by an authorized representative of the administration every **five** years. Technical changes to the facility may require Plan recertification by a professional engineer. An authorized administrative representative is a person who has been delegated, in writing, the authority to sign and certify this type of document.

The GPP portion of this plan requires a review of the Plan every **three** years, or more frequently, depending on the ability of the plan to protect the environment in the event of a release of material.

This Plan shall be reviewed and amended as indicated in this section. Reasons for Plan amendment or review include the following:

- Five year plan review and update (SPCC),
- Three year plan review and update (GPP),
- Change in facility design, construction, and operation,
- Maintenance, modification, or installation of existing or new containers,
- Increase in regulated pollutant storage capacity,
- Change in maintenance practices that materially affect the facility's potential for the discharge of pollutants,
- Spill of at least 42 gallons of petroleum in any 12-month period,
- Discharge of 1,000 gallons of petroleum in one spill during any 12-month period,
- Failure of the Plan to prevent a discharge from impact on the environment,
- Plan deficiencies identified by the Regional Administrator,
- Plan deficiencies identified from a regulatory agency inspection, or
- Changes to the regulations governing the plan requirements.

3.2.1 Prepare, Implement, and Review [40 CFR 112.3]

The Kentucky water regulations require EKU to prepare and implement a GPP plan. The plan is available for review by the EPA Regional Administrator, Division of Water staff, or the public during normal business hours. It is periodically reviewed by EKU staff and updated, as appropriate.

3.2.2 Amendment of SPCC Plan by Regional Administrator [40 CFR 112.4]

If, within a twelve-month period, EKU discharges more than 1,000 gallons, or more than 42 gallons in each of two discharges, EKU must submit information regarding this spill to the EPA Regional Administrator (RA) within 60 days. Based on a review by the RA, EKU may be required to revise and submit this SPCC plan. The RA is located at the US EPA Regional office in Atlanta, Georgia.

3.2.3 Amendment of SPCC Plan by Owner/Operator [40 CFR 112.5]

If this Plan is found to be deficient according to applicable regulations, pursuant to a state site inspection, or Plan review, the Spill Response Coordinator shall revise and resubmit this Plan to the Kentucky Environmental and Public Protection Cabinet (Cabinet) within 30 days for further review. The Cabinet will make a final determination regarding the ability of this Plan to prevent and/or contain the discharge of pollutants from EKU. The Spill Response Coordinator or Alternate Spill Response Coordinator shall implement the amendment of this Plan as soon as possible, but not later than six months after the amendment becomes part of this Plan.

If this plan fails to protect the environment when implemented to respond to a spill or emergency, the Spill Response Coordinator or the Alternate Spill Response Coordinator will initiate an immediate review of the plan elements that contributed to that failure. The changes to the plan must be certified by EKU administration and certified by a registered professional engineer if the change is technical and not administrative.

3.3 Review Location for GPP & SPCC

This plan document is a combined plan prepared in conformance with the US EPA Integrated Contingency Plan guidance for preparing emergency response and spill response plans. The Groundwater Protection Plan and the Spill Prevention Control and Countermeasures Plan and inspections are kept on a shared drive maintained by EKU Information Technology and an additonal hardcopy of the plan is in the office of the Assistant Director of Facilities Services; Environmental Compliance and Energy Management (Gentry Building).

3.4 Record Maintenance [40 CFR 112.7]

The master files for the Plan are kept at N:Administrative\Facilities\Environmental Compliance\GPP & SPCC\Plan Document

The Plan shall be available for review for a period of six years to comply with the GPP and SPCC regulatory records retention requirements.

Additionally, all records evidencing compliance, including inspection records, secondary containment discharge and tank integrity test reports, are considered a part of this Plan and shall be maintained for a period of three years. A record summarizing the results of the inspections, a certification that EKU is in compliance with this Plan, and a record identifying any incidents of noncompliance shall be maintained for a period of six years.

3.5 Plan Procedures

This plan identifies procedures that will be used by EKU and staff to respond to the following:

- Emergency Response to Spills
- Emergency Response Equipment Use
- Spill Response Notifications
- Employee Training for Spill Response
- Routine Area Inspections

3.6 Emergency Response and Plan Responsibilities

3.6.1 Plan Coordinator

The Spill Response Coordinator is responsible for implementation of the elements identified in this plan. The Executive Director of Public Safety & Risk Management provides operational response for events identified in this plan. The Director of Emergency Management & Security serves as the Alternate Spill Response Coordinator. Contact phone numbers for those staff are presented in Section 1.0 and Appendix 2. Administrative coordination is performed by the Assistant Director of Environmental Compliance and Energy Management under the office of Facilities Services.

3.6.2 Spill Committee and Responsibilities

The function of the Spill Plan Committee is to develop and update EKU's spill plan elements and to assist EKU Administration in the implementation of the spill plans and

general combined regulatory plan, maintenance, and revision. The following persons constitute the Spill Plan Committee for EKU:

Spill Response Coordinator

Responsibilities:

- Establish, train and equip spill response operations
- Coordination of plant incident response and cleanup
- Environmental assessments associated with spill, release, reporting, and agency notifications (as required)
- Mandatory and awareness training and documentation
- Annual comprehensive site compliance evaluation

Alternate Spill Response Coordinator:

Responsibilities:

- Back-up first response
- Overall plan coordination and updating
- Monitoring, inspections and record keeping
- Periodic sampling, analysis and reporting as required by KPDES
- Review and managerial control of technical projects and programs

Spill Team

Responsibilities:

- Spill response
- Review incidents and recommend changes to plan
- Assist in performing inspections and reporting deficiencies
- Identification of potential spill sources
- Review of process or facility changes that may affect existing plan

4.0 REGULATED ACTIVITIES AND MATERIALS

The locations and description of tank contents for regulated activities with the potential to contribute pollutants to groundwater and/or stormwater are shown in Appendix 1, Figure 4 - Wet Transformer Locations and Figure 5 - AST and UST Locations. The following observed activities at EKU require one or more plans to be prepared and implemented:

- Storing petroleum in bulk containers (55-gallon or greater)
- Transferring petroleum to bulk containers
- Unloading bulk liquid and dry materials
- Transfer of bulk liquid and dry materials from delivery trucks to inside and outside storage locations
- Transferring coal from point of storage to boiler house
- Storing waste materials in containers

4.1 Storage of Regulated Materials SPCC [40 CFR 112.7(a)] GPP (401 KAR 5:037 & 5:065)

Storage of petroleum or bulk materials is regulated and requires one or more of the following: SPCC, GPP or SWQMP. Improper storage activity can potentially contribute pollutants to groundwater or stormwater and the plan procedures provide a framework to prevent this environmental impact. The drainage pathways for a spill that would impact stormwater are shown in Appendix 1, Figure 2 and are related to pollutants that could be released from the coal pile through Outfall 001.

Regulated activities requiring the SPCC Plan include:

- Over 1,320 gallons of petroleum storage in bulk containers. Bulk containers are defined as 55-gallons or larger. Actual total petroleum inventory is over 16,000 gallons.
- Storage of petroleum in operational bulk containers. Operational containers include transformers, elevator hydraulic units, trash compactor hydraulic units.
- Storage of fat and grease from cafeteria operations in bulk containers.

Fifty-five gallon drums of fresh motor oil and antifreeze are stored in the maintenance building on concrete floors. Fresh hydraulic oil and transmission fluid are stored in 5 gallon buckets in the maintenance building on concrete floors. Fifty-five gallon drums of used motor oil and used hydraulic oil are stored outside the maintenance building on a concrete floor. Universal Environmental Services, LLC collects any used oil. Oil filters are drained into the 55 gallon drums and the filters disposed of in the local landfill.

Regulated activities requiring the GPP Plan include (Appendix 1, Figures 4 & 5):

- Storage of bulk liquid materials. Bulk is defined as 55-gallons or larger and includes water treatment chemicals, antifreeze, boiler treatment chemicals.
- Storage of bulk dry materials in excess of 100-pound dry weight or in piles. Bulk dry materials include the coal pile (stored for use in the boiler operation) and coal combustion products (fly ash from baghouse and bottom ash).
- Storage of used equipment outside.

An inventory of current petroleum and other materials stored and used at EKU with potential to contribute pollutants to stormwater or groundwater is presented in Appendix 3.2.

4.2 Transfer of Petroleum Products (GPP, SPCC)

Transfer of petroleum products is a regulated activity under the SPCC and GPP regulations and requires the preparation and implementation of both the SPCC and GPP to address this requirement.

There is no transfer of petroleum products into or from the numerous transformers located at this site. There are transfer activities associated with all petroleum containing aboveground storage tanks (AST) and underground storage tanks (UST). These petroleum storage tanks are associated with emergency equipment [generator(s) and fire pump(s)] and as a fuel supply for vehicles and equipment used by the University to support maintenance and facility/grounds activities. These are identified in Appendix 1, Figures 4 & 5 by building location, container volume, and container contents.

ASTs and USTs are filled by commercial tanker trucks.

4.3 Solid Waste Storage and Disposal (GPP)

Solid waste storage and disposal activities are regulated under various state and federal regulations. EKU is required to prepare a GPP to address the structural and administrative activities related to solid waste storage and disposal.

It is illegal to dispose of any solid waste without a permit. Permits to dispose of solid waste on property are included in Appendix 9 where applicable. Storage of solid waste must be conducted in a manner to be protective of the environment. The GPP plan elements address the structural and administrative practices by EKU to prevent groundwater contamination from solid waste storage practices.

Solid waste is generated by campus activities including boiler operations (coal combustion waste), cafeteria operations, building maintenance, grounds maintenance, road maintenance, utility maintenance, HVAC maintenance, university academic activities, administrative office operations, science and chemistry department activities, coal fired boiler operations, and fleet / vehicle maintenance.

Solid wastes are stored and disposed of in accordance with local, state, and federal regulations. Waste streams on campus have been identified and there is no mixing of hazardous waste (RCRA waste) and regular or special waste. Solid waste is generated from the construction, remodeling, repair, and demolition of structures and roads. Solid waste may also consist of vegetation resulting from landscape activities, land clearing and grubbing, utility line maintenance, and seasonal and storm related cleanup.

Waste is primarily disposed of in a local licensed landfill. Waste equipment and materials are stored for recycle or reuse in covered areas to prevent impact on stormwater.

4.4 Storage of Special Waste (GPP)

Special waste is defined by the Kentucky Division of Waste Management as follows: coal boiler fly ash (dust collector waste), coal boiler bottom ash, batteries, mercury containing switches and equipment, light bulbs (fluorescent), tires, used oil, and electronic equipment (CRT, TV, computers, keyboards, electronic storage devices).

These special wastes are stored either inside on solid concrete floors, in totally enclosed tanks or containers, or in locations to prevent impact on the environment from stormwater. EKU also manages each of these waste streams in a manner to prevent impact on the environment due to transfer and disposal. Recycling contractors are used to remove and recycle selected special wastes generated by EKU operations.

4.5 Onsite Water or Wastewater Treatment Operations

EKU does not have any on-site waste water treatment operations.

EKU does not have any on-site potable water treatment operations.

Potable water is purchased for campus use through Richmond Utilities. EKU does have boiler feed water treatment inside the boiler house. Concentrated boiler treatment chemicals are stored inside on a continuous concrete floor. Diluted boiler feedwater (with chemical addition) is stored in bulk containers inside the boiler house on continuous concrete floors.

EKU does not have any wastewater treatment for municipal sewage generated by campus operations. Each building on EKU's campus is connected to the municipal sewer department maintained by EKU Facilities Services (building side) and Richmond Utilities (street side). EKU does not use any septic systems on campus.

4.6 Applying Fertilizers of Pesticides for Institutional Lawn Care

EKU does store and use fertilizers and pesticides for institutional lawn care. These are stored by the building and grounds staff and applied to University property on a

scheduled basis. Storage and use follow the manufacturer's recommendations. These materials are stored on solid surfaces away from drains. These materials are used by staff who have been trained in the proper use of these materials. The materials are placed into the dispensing equipment over hard surfaces and any spill materials are cleaned up promptly to prevent impact to the stormwater or groundwater.

5.0 SPILL RESPONSE PROCEDURES AND NOTIFICATION [40 CFR 112.7(A)]

EKU has prepared an emergency response plan for various emergencies including material spills and releases, fire, medical emergencies, weather emergencies, bomb threats, and hostile actions. The current plan is included in Appendix 2. This section of the plan has been prepared to provide an overview of the detailed planning steps identified in the documents prepared by EKU's staff and included in Appendix 2.

5.1 Emergency Spill Response - Responsibility Decision Tree

The following chart describes the typical response actions to a release of regulated materials at EKU. The staff who are authorized and responsible for the emergency actions are described below by job description or job title:

Emergency Action	Primary Person(s) Authorized to Implement Action - Job Description	Employee Name or Title
1. Internal notification to staff or emergency team of a fire, medical emergency, spill, release, or material discharge	All Employees, Students, Visitors, Contractors, Vendors	See list to left
2. Implement Containment - Spill Pads, Apply Absorbent, Spill Booms, Close Retention Pond Valve, Plug Storm Sewer Line, Drain Covers	Small Spill - All Trained Employees Other - Spill Response Team	Trained Employees Only
3. Implement Evacuation	EKU Police, Spill Response Coordinator	EKU Police
4. Call 911 - fire, police, ambulance	All Employees	All Employees
5. Incident Command - Assess Spill	Initial - EKU Police Final - Spill Response Coordinator	Executive Director of Public Safety and Risk Mgmnt
6. Implement Spill Control - plug drains, plug Leaks, build dike, stop flow	Spill Response Coordinator and Spill Response Team	Executive Director of Public Safety and Risk Mgmnt and Spill Response Team

Emergency Action	Primary Person(s) Authorized to Implement Action - Job Description	Employee Name or Title
7. Notify Local Agencies - LEPC, Fire, Police Notify State Agencies - SERC, Ky. NREPC Emergency, Div Water, Div Waste, Div Air Notify Federal Agencies - NRC	Spill Response Coordinator	Executive Director of Public Safety and Risk Mgmnt
8. Implement Contractor Response Actions	Spill Response Coordinator	Executive Director of Public Safety and Risk Mgmnt
9. Implement Cleanup Actions / Response	Spill Response Coordinator and Spill Response Team	Executive Director of Public Safety and Risk Mgmnt
10. Implement - Post Incident Decontamination Include - Operating Equipment and Response Equipment	Spill Response Coordinator and Spill Response Team	Executive Director of Public Safety and Risk Mgmnt and Spill Team Members
11. Implement Spill/Waste Containerization and Labeling	Spill Response Coordinator and Spill Response Team	Executive Director of Public Safety and Risk Mgmnt
12. Implement Waste Disposal	Spill Response Coordinator	Executive Director of Public Safety and Risk Mgmnt
13. Complete Waste Manifests	Spill Response Coordinator	Executive Director of Public Safety and Risk Mgmnt
14. Prepare Incident Report and Submit to local, state, or federal agency	Agency Notification Coordinator University Administrator	Executive Director of Public Safety and Risk Mgmnt Assoc VP, Fac Serv & Cap Planning
15. Review/Revise Emergency Spill Plan as needed	Spill Response Coordinator	Executive Director of Public Safety and Risk Mgmnt
16. Develop and Implement Employee Emergency and Spill Training program	Spill Response Coordinator	Executive Director of Public Safety and Risk Mgmnt
17. Conduct and Document Employee Emergency and Spill Response Training	Spill Response Coordinator	Executive Director of Public Safety and Risk Mgmnt

5.2 Emergency Response - Evacuation Due to Spill

In the event the spill or leak requires an evacuation of a location; staff, students, visitors, contractors, vendors, will be alerted by EKU Police or the Spill Response Coordinator - that they should leave the building immediately. Each responsible EKU Staff person on campus has received formal, documented training with respect to his or her duties and responsibilities depending upon the type of emergency.

The evacuation steps include the following actions:

- Shut off equipment in the immediate area of the spill or leak if time permits
- Leave the building by the closest exit that is not involved in the spill or emergency incident
- Go quickly to the evacuation assembly point for this location
- Assembly area supervisor will take a headcount of employees
- Wait until the "All Clear Signal" is given by the EKU official in charge of evacuation or the local "Incident Commander"

5.3 Emergency Response - Injury

DO NOT ENTER THE SPILL AREA IF YOU DO NOT HAVE REQUIRED PPE

In the event that there is an injury as a result of or incidental to a spill or leak, EKU has staff with first aid training to respond. All staff, students, vendors, contractors, and visitors should take the following actions, prior to the arrival of medical help:

a. Immediately call EKU Police, spill response coordinator, or spill team by radio, phone, or through available EKU staff.
b. Determine if you have the knowledge to know if the area is safe to enter where the injured person is located.
c. If trained, immediately administer appropriate care techniques until the medical help unit arrives

5.4 Emergency Response - Fire

DO NOT ENTER THE SPILL AREA IF YOU DO NOT HAVE REQUIRED PPE

If a fire occurs as a result of or incidental to a spill of material, immediately use a fire extinguisher on small fires (if you have received proper training); otherwise, take the following actions:

a. Call EKU Police (911)
b. Pull the closest fire alarm.
c. If possible, remove source of fuel, shut off equipment, and evacuate the area.
d. Follow the instructions of EKU Spill Response Coordinator or Local Fire Department Personnel.

5.5 Immediate Response -Non-Hazardous Small Spill of less than 55 gallons - 40 CFR 117.7(d)

NOTIFY EKU POLICE IMMEDIATELY BY PHONE

1. Extinguish any open flames or smoking material, or cease any operation such as welding, cutting, or brazing that could ignite the spilled material.
2. The person discovering the spill should take the necessary steps to reduce or eliminate any further spillage then implement spill cleanup procedures.
3. Curb the spill with spill control materials such as spill blankets, spill pigs, absorbent clay, or other available materials. Prevent the spill from migrating.
4. When the spill is curbed, soak up oil or spilled material via sorbent pads and wring out liquid in a clean, unused spill cleanup drum. Be sure that appropriate labels are placed on drums, and that the drum contents are properly identified.
5. The Spill Response Coordinator will contact the off-site contractor to assist in the cleanup and removal of spilled materials.
6. If the spilled material has left the property and has impacted a stream, review the spill notification action plan decision tree in Section 1 of this plan to determine if a RQ spill has occurred. If it is determined that a reportable quantity (RQ) spill has occurred, immediately notify the following:

National Response Center	1 800 424-8802
Kentucky Emergency Response Commission	502 564-2380
Richmond Fire Department	859 623-1164

Spill Response Coordinator will use the Spill Notification Form in Section 5.9 for reporting spills to these agencies.

7. Contaminated soils areas should be promptly removed by a soil remediation firm to prevent contamination of groundwater.
8. Accumulated oil or oil contaminated materials within containment areas caused by oil leaks or spills shall be completely removed within 72 hours of the leak or spill.

5.6 Immediate Response Non-hazardous Large Spill greater than 55 gallons

NOTIFY EKU POLICE IMMEDIATELY BY PHONE

1. Extinguish any open flames or smoking material, or cease any operation such as welding, cutting, or brazing that could ignite the spilled material.
2. If the person discovering the spill is trained in the spill response procedures, take the necessary steps to reduce or eliminate any further spillage then contact Spill Response Coordinator or office.
3. If the person discovering the spill is not trained in spill response actions, immediately notify the area supervisor.
4. Curb the spill with spill control materials such as spill blankets, spill pigs, absorbent clay, or other available materials. Prevent the spill from migrating to floor drains or storm drains.
5. A large spill will be cleaned up by an off-site spill cleanup contractor. The Spill Response Coordinator will contact the off-site contractor to mobilize the cleanup and removal of spilled materials.
6. If the spilled material has left the property and has impacted a stream, review the spill notification action plan decision tree in Section 1 of this plan to determine if a RQ spill has occurred. If it is determined that a RQ spill has occurred, immediately notify the following:

National Response Center	1 800 424-8802
Kentucky Emergency Response Commission	502 564-2380
Richmond Fire Department	859 623-1164

NOTE: Use the Spill Notification Form in Section 5.9 for reporting spills that leave the property to these agencies.

7. Accumulated oil or oil contaminated materials within containment areas caused by oil leaks or spills shall be completely removed within 72 hours of the leak or spill.

   NOTE: Use the Spill Notification Form in Section 5.9 for reporting spills to these agencies.

8. Contaminated soils areas should be promptly removed by a soil remediation firm to prevent contamination of ground water.

5.7 Notification in Event of Spills [40 CFR 11.27(a)(4)]

1. In the event of spills of any substance

NOTIFY EKU POLICE IMMEDIATELY BY PHONE

2. EKU POLICE will assess the scene by phone and contact the Spill Response Coordinator.
3. The Spill Response Coordinator will implement the appropriate spill cleanup and proper notification.
4. If the Spill Response Coordinator is not available, EKU Police will contact the Alternate Spill Response Coordinator.
5. External regulatory agencies will only be notified if the spill is reportable. The determination of a reportable quantity (RQ) spill may be made using the US EPA Region 4 spill chart listed in Section 1.6 of this Plan. The following agencies may be contacted:

   - Richmond Fire Department: **911**
   - Kentucky Department of Natural Resources and Env. Protection: **(502) 564-2380**
   - U.S. Coast Guard National Response Center: **(800) 424-8802**

5.8 Notification Contact List - Also Appendix 2.1

Emergency Phone Numbers	
Richmond - Fire	911 land line; cell call 859 624-4776
Richmond - Police	911 land line; cell call 859 624-4776
Richmond - Medical	911 land line; cell call 859 624-4776
Kentucky Environmental Emergency Response Hotline	(502) 564-2380 or (800) 928-2380
National Response Center (NRC)	(800) 424-8802
Richmond Utilities (Gas, Water, Sewer)	(859) 623-2323
Kentucky Division of Water	(502) 564-3410
Kentucky Division for Air Quality	(502) 573-3382
Kentucky Division of Waste Management	(502) 384-4734
Spill Response Contractor: PECCO, Inc.	(859) 887-5508

Spill Respondents	
EKU Police Department (Spill Response Dispatch)	911 (859) 622-1111 (cell)
Spill Response Coordinator: Bryan Makinen – Executive Director of Public Safety and Risk Management	(859) 622-2421 (work) (859) 893-6503 (cell)
Alternate Spill Response Coordinator: Gary Folckemer - Director, Emergency Management & Security	(859) 622-8987 (work) (859) 625-8370 (cell)
Agency Notification Coordinator: Bryan Makinen – Executive Director of Public Safety and Risk Management	(859) 622-2421 (work) (859) 893-6503 (cell)
Alternate Notification Coordinator: Paul Gannoe – Assoc VP, Fac Serv & Cap Plng	(859) 622-1497 (work) (502) 330-7872 (cell)

5.9 Spill Notification Form

A discharge of a harmful quantity of oil to navigable waters includes discharges of oil that violate water quality standards, cause a fire or sheen upon the water surface or discolor the water surface or adjoining shoreline, or cause a sludge or emulsion to be deposited beneath the water surface or upon adjacent shoreline. A hazardous waste spill requires reporting using this form.

Name of caller:	Date of call:	Time of call:
Facility Name: EKU , Richmond, Kentucky 40475 Building: _____		Facility phone number (859) _____ (building)
Spill date:	Spill time:	
Type of material spilled:		
Estimated total quantity spilled:		
Estimated total quantity spilled into navigable waters:		
Source of the spill:		
Description of receiving water affected: Taylor Fork Creek	Location of discharge from property:	
Cause of spill:		
Any damage or personal injury caused by spill:		
Actions taken by facility to stop, remove or mitigate the effects of the spill		
Whether evacuation is needed		
Names of individuals and agencies contacted including the following:		
National Response Center (800) 424-8802	Name of person contacted:	Log Number of Call (if any)
Kentucky Emergency Response Commission (502) 564-2380	Name of person contacted:	Log Number of Call (if any)
Richmond Local Emergency Response 911	Name of person contacted:	Log Number of Call (if any)
Other:		

Post spill response follow-up actions (name and date)	Written report:	
	Restock response materials	
Corrective actions:	Waste/spill material removal:	
	SPCC plan review:	
	Other:	

6.0 EMERGENCY RESPONSE PROGRAM [40 CFR 112.7(A)]

6.1 EKU Response Organization

The EKU Emergency Response Organization is a group of employees trained in response to spills of materials. These employees will respond to emergency incidents at EKU. These people receive annual training and conduct exercises to maintain proficiency in the use of emergency equipment and application of same in emergency situations. The following describes the responsibilities for employees (by job title) who will receive training in various phases of spill response identified in Section 7 of this Plan:

Internal Spill Notification	All EKU Employees, Students, Contractors, Vendors
Incident Commander	Spill Response Coordinator
Spill Cleanup Responsibility	
Non-hazardous Material	
Inside	Employee, Area Staff, Spill Team
Outside	Spill Response Coordinator, Off-Site Spill Contractor (based on size)
Incident Reporting	
ANY SPILL	Spill Response Coordinator
Incident Notification Report	(see Appendix 12)
Call Medical or Fire Emergency	All Employees
Call Richmond EMS, Richmond Fire Department	All Employees

6.2 Response Equipment

EKU has the following emergency equipment and communication systems on hand to respond to a spill incident:

- Strategically located eyewash (permanent and portable) and showers
- Fire blankets

- Dry sweep and oil dry
- Oil Absorbent Pads, Booms, and Ropes (snakes)
- Chemical Spill Kits (Chemistry Department)
- Wet Dry Vacuum
- Empty 55 Gallon Drums (Spill Cleanup)
- Brooms, mops, shovels
- Internal phone systems
- Two-way radio systems
- Air monitor (LEL, Oxygen, H2S, CO)
- pH paper
- First aid cabinets and blood borne pathogen spill kits

EKU verifies equipment listed above in the monthly inspection forms - See Appendix 5.

6.3 Personal Protective Equipment

EKU has stockpiled personal protective equipment that may be needed by the Spill Response Team during a spill or release response. The Spill Response Team members have been trained in the use of this equipment and are responsible for monthly inspections of the personal protective equipment stockpiles to insure that this equipment is available. The monthly checklist for personal protective equipment is included in each of the appropriate monthly inspections in Appendix 5. The following equipment is available for routine operations and for emergency response: rubber gloves, rubber boots, rubber aprons, chemical resistant clothing, tyvex suits, face shields, goggles, hearing protection, dust masks, dust respirators, organic vapor respirators, acid gas respirators, self-contained breathing apparatus, cold weather outerwear garments.

6.4 Visual Inspections [40 CFR 112.7(e)]

EKU has developed this Plan to organize the program for response to spills of petroleum related products and solid waste. The employees with responsibilities for

spill response receive training regarding the spill response actions described in Sections 5 and 6 of this Plan. Details of training to prepare these employees for their spill response actions are presented in Section 7 of this Plan.

EKU has also developed and implemented periodic inspections of storage areas, storage tanks, dikes, and other facility areas where petroleum is stored or used.

6.4.1 Visual Inspection - Bulk Storage Containers

EKU has developed a periodic inspection procedure to evaluate the status of bulk containers, valves, pipes, fittings, secondary containment dikes, and other equipment used in storage, transfer, or use of paint or petroleum materials. The inspection checklists must be retained for a period of at least three years. The bulk containers included in the visual inspection include the following:

- Indoor drum storage
- Outside drum storage
- Outside AST
- Culverts, ditches, sediment ponds, buffer zone, lateral field

This procedure for periodic inspections and the inspection forms are included in Appendix 5.

6.4.2 Visual Inspection and Test Records

The Spill Response Coordinator or his designee is responsible for maintaining the documentation of inspections of the bulk petroleum tanks, bulk chemical storage areas, all outside secondary containment, and operating equipment that contains fluids that if spilled could result in an environmental impact. Any deficiencies noted on any inspection checklist must be corrected with the written documentation attached to the inspection checklist.

7.0 TRAINING

NO STAFF MAY ENTER THE HOT ZONE WITHOUT PROPER TRAINING

The HOT ZONE is defined as a SEVERE HEALTH OR LIFE risk area in or adjacent to a spill or release which, without PPE or training; staff, students, or other personnel would become victims as a result of entering that area.

SEVERE HEALTH OR LIFE risk areas include but are not limited to the following:

- Permit Required Confined space (see OSHA 29 CFR 1910.119)
- Atmospheric conditions that could result in death (oxygen below 19.5%, toxic fumes, asphyxiates, dust, air contaminants)
- Combustible air conditions above the lower explosive limits
- Physical site conditions that are hazardous (power line, electrical issue, unstable structure)
- Release of chemicals or materials in an enclosed lab, room, or building and the ventilation system has failed in the lab, room, or building

7.1 Training Operations Spill Response Team

Proper training for staff with responsibilities for spill response, including containment, control, cleanup, and disposal are required by OSHA. This includes at a minimum the following:

- Training on the SWQMP and SPCC and GPP combined plan
- Spill Notification and First Response - Internal Spill
- Training on EKU's emergency plan prepared for 29 CFR 1910.38
- HAZCOM training for the chemicals and materials in the areas where they will respond (per 29 CFR 1910.1200)
- HAZWOPER training per 29 CFR 1910.120
- Proper personal protective equipment (PPE) use (based on MSDS)
- Medical Response - CPR First Aid
- Fire extinguisher training

Note if the operations spill response team or the department response team (including students) are required by the SPECIFIC BUILDING OR CHEMICAL RESPONSE PROCEDURE to use respirators then each person with that responsibility must follow the OSHA standard with respect to respiratory personal protective equipment. It is not the intent of this plan to provide that training. It is the intent of this plan to provide the framework that describes safe practices to be used when response involves more than the use of the following PPE: gloves, boots, face shield, goggles, and apron.

Recommended training for facility staff by job title or job description is identified in Appendix 10.

7.2 Training for Spill Awareness for affected Employees

All affected employees receive annual documented awareness training in EKU's emergency plans which covers the following:

SWQMP and SPCC and GPP combined plan - content, awareness, employee responsibilities

HAZCOM training for chemicals or materials in their work area

Awareness of EKU's Emergency Plan (see Appendix 2)

Documentation of this awareness training will conform to EKU's training policy, not included in this plan.

7.2.1 Employee Training - GPP

Training focuses on groundwater protection and includes educating the employees, contractors, and vendors regarding the importance of groundwater protection. Specific training practices are discussed in detail in this combined plan. The training includes all aspects of the GPP and includes, but is not limited to the following topics:

- Review of the GPP
- Importance of groundwater protection
- Activities that have the potential to pollute groundwater
- Review of storage, use, and disposal of pesticides and fertilizers

- Inspection schedule
- Spill response
- Review of SWQMP and SPCC plans - as they relate to groundwater

Annual documented training is provided to all staff whose activities could impact groundwater.

7.2.2 Employee Training - SPCC

SPCC training focuses on prevention actions related to managing, transferring, storing, and spill response related to petroleum products in inventory at EKU. The training includes educating employees, contractors, and vendors regarding the importance of preventing impact on groundwater and stormwater from activities involving petroleum products at EKU. Specific training practices are discussed in detail in this combined plan. The training includes all aspects of the combined SPCC/GPP and SWQMP and includes, but is not limited to, the following topics:

- Review of the SPCC
- Importance of groundwater and stormwater protection
- Activities that have the potential to pollute groundwater and stormwater
- Inspection schedule
- Spill response
- Review of combined SPCC/GPP and SWQMP

Annual documented training is provided to all staff whose activities involve petroleum products.

8.0 SPILL POTENTIAL

Total petroleum in storage at this location exceeds 19,400 gallons in over 100 containers ranging in size from 55 gallons to 2,000 gallons. The release of this material due to a natural catastrophe (earthquake) would result in the materials entering both the groundwater and flowing by surface water toward and into the Kentucky River. Due to the fact that most of the structures containing petroleum are transformers, the likelihood that all of these containers would impact stormwater or groundwater at the same time is remote.

Spill potential for the coal stored in the coal pile is remote.

8.1 Spill Potential Categories

This section of the Plan identifies the administrative, structural, and operational programs implemented to prevent discharge of regulated substances to the environment. Failure of one or more of these programs could result in a discharge that could impact the environment.

Uncontrolled elements that may require activation of the Plan to prevent discharge include natural events like floods, hurricanes, tornados, and earthquakes; third party acts of vandalism; and impact by offsite activities and operations.

Administrative elements include: procedures, training, labeling, monitoring, inspecting, checking, implementing corrective actions, and availability of contractor spill response resources.

Structural elements include: security, container specification, tank piping, tank supports, overfill protection, secondary containment, containment valves, containment pumps, dike material, leak detecting alarms, berms, retention basins, or unloading containment areas.

Operational preparedness includes: labels, spill kits, spill response equipment, fire response equipment, overfill alarms, leak detector alarms and systems, and fire alarms.

8.2 Discharge Potential - Uncontrolled - Natural/Weather

The probability of a petroleum or bulk contained material discharge due to a natural or weather related event is relatively low in the Richmond area.

Historic meteorological data suggests that the EKU facility in Madison County, Kentucky, will not be affected by hurricanes and should not be affected by tornados. The likelihood that a tornado would impact this facility is low based on the USGS NOAA severe weather maps for tornado activity in Kentucky (see Appendix 4).

The risk for a petroleum discharge due to a flood is low. This is based on review of the Richmond floodplain map from FEMA. EKU is not included in any flood-prone area in Richmond, Kentucky.

The risk for a petroleum discharge due to an earthquake is low due to the fact that EKU is located in a peak acceleration rating of 4 (mild disturbance) relative to a peak acceleration rating of 40. This peak acceleration (%g) with a 10% probability of exceedance in 50 years is shown in the USGS August 2002 Map of the Eastern half of the United States (see Appendix 4).

The risk for discharge of petroleum from an uncontrolled third party (vandal) is low based on the fact that a significant portion of the petroleum stored at this location is in transformers and not in bulk containers available to the public (i.e. inside buildings).

8.3 Discharge Potential - Administrative

The potential for discharge related to failure of an administrative activity is low. EKU conducts periodic inspections, implements corrective actions, provides employee training, and annually reviews all procedures related to elements of this plan.

EKU conducts and documents periodic review or inspections of the following: bulk storage tanks, security equipment, spill kits, spill response equipment, secondary containment dikes, fire extinguishers, administrative procedures related to emergency response, and emergency plans (combined SPCC/GPP, SWQMP).

In addition to the inspection of equipment and containment, EKU conducts annual training for spill team personnel and makes all employees aware through periodic and new employee awareness training of the requirements to promptly report and take action for spills.

8.4 Discharge Potential - Structural [40 CFR 11.27(b)] SPCC GPP

Potential pollutants can enter the groundwater through cracks in the concrete floor in the maintenance facility or through leaks or spills from transformer casings, tanks storing bulk fluids, and USTs. Structural controls include diversion berms, diversion ditches, and concrete pads and solid concrete floors to prevent a petroleum or material release from impacting groundwater.

Included in Appendix 1 are facility diagrams showing flow direction of a release or spill of bulk material. These include the facility location shown on the topographic location map (Figure 1), location of tanks shown on the activity map (Figure 4) and the discharge direction shown on the stormwater discharge direction map (Figure 2). The groundwater discussion is included with the hydrogeology discussion is in Section 2.10 of this plan.

8.5 Discharge Potential - Operational [40 CFR 112.7(b)] SPCC GPP

EKU has developed and implemented operational procedures for numerous activities that involve storage, transfer, use, and disposal of chemicals, materials, hazardous substances, and bulk substances (bulk as defined by GPP and SPCC regulations). The operational procedures include but are not limited to the following:

- installation of equipment, controls (cathodic protection, overfill alarms), monitors (fire, heat, smoke, unauthorized entry), and secondary containment (spill pallets, individual over pack containers, double wall tanks),
- developing and implementing procedures to prevent impact on groundwater and stormwater including: good housekeeping, fuel dispensing, fuel transfer, vehicle washing, discharge of materials or wastes to the environment, storing waste and hazardous waste, disposing of wastes and hazardous waste, emergency response procedures.
- developing and implementing a combined SPCC/GPP and SWQMP, and procedures for periodic and annual inspections of all areas where activities, practices, and storage of materials subject to the combined SPCC/GPP and SWQMP occur.

Failure of any of these operational programs and procedures could result in impact to the groundwater or stormwater. Prompt corrective actions by alert and trained staff are part of EKU's proactive approach to preventing operational failures that would result in impact to the environment.

9.0 POLLUTION PREVENTION MEASURES AND CONTROLS

Preventive structural controls are used to prevent a release of a pollutant from reaching the environment. These controls are considered passive controls since they are constructed as a permanent installation. Examples include but are not limited to dikes, berms, retention ponds, detention ponds, solid surfaces, curbs, unloading/transfer dikes, and double wall tanks/containers. These preventive controls typically include permanent components like valves, plugs, flanges, pipe caps, etc.; to prevent release of contaminants. The actions by the facility staff to drain non-polluted water from these permanent structures is not part of the preventive structural control. That action is part of the operational or administrative preventive control and will be discussed in that section of this plan.

9.1 UST Preventative Structural Controls – GPP

Preventive structural controls for the protection of ground water include the following:

- USTs are registered with the Kentucky Underground Storage Tank Branch of the Division of Waste Management and are regulated by 401 KAR Chapter 42 (and federal regulations listed at 40 CFR Part 280).
- UST tank suction side is of the European design that permits fluids to return to the tank rather than retain petroleum in the supply side (for example - fluid held above a tank check valve).
- A leak detection system is in place and operational.

9.2 Secondary Containment Preventative Structural Controls [40 CFR 112.8(c)] - SPCC

Preventive structural controls are mandatory for petroleum as defined in the SPCC regulations. Permanent or temporary secondary containment of materials in tanks and containers is an important safeguard to prevent release of materials to the environment. The SPCC regulations require secondary containment for bulk containers unless other

administrative or operational programs are in place to provide equal protection of the environment. The GPP regulations require that facilities prevent the release of materials stored in bulk containers that if spilled would impact the environment. The same secondary containment used to comply with the SPCC regulations will also provide the same preventive structural control for materials subject to the GPP regulations.

Preventive structural controls include dikes for secondary containment for bulk containers, double wall tanks as secondary containment for bulk containers, solid surfaces at petroleum unloading and transfer locations, spill pallets for 55-gallon drums, and bulk storage container material compatible with the fluid in storage.

- Bulk containers larger than 55-gallons storing petroleum products are stored in double wall tanks
- Bulk containers storing petroleum products are stored in dikes with sufficient volume to contain 110% of the contents of the largest tank in the dike
  - Dikes are designed with materials that will contain the fluid stored in the bulk tank and meet the design criteria specified in the SPCC regulations
  - If dikes have valves to drain precipitate, those valves are locked closed at all times
  - Where a floor surface is designed as the secondary containment
    - the floor is continuous with no cracks
    - there are no drains in the floor
    - sumps or trenches are sealed to prevent discharge to the environment
    - curbs are provided to prevent a release to the environment
- Bulk containers (of any material subject to SPCC or GPP) are stored on spill pallets where the spill pallet is constructed of material compatible with the fluid and has a volume greater than the largest container on the pallet.

9.3 Preventive Practices - Application of Pesticides/Fertilizers

Pesticides and fertilizers are used for lawn care on EKU property. This includes the storage of pesticides and fertilizers and the application of same to facility grounds. The following practices are followed to be in compliance with local, state, and federal law and also to comply with the requirements of the GPP portion of this plan:

- These products are applied according to manufacturer's recommendations.
- EKU will only use commercial fertilizers that contain a detailed fertilizer analysis which has been properly registered with the University of Kentucky, Regulatory Services, Division of Fertilizer Inspection.
- EKU will only use slow release fertilizer to prevent the leaching of potential fertilizer application to surface water or groundwater.
- Staff who apply pesticides are certified applicators (Note - a certified applicator is a person who has received training, passed a test, and received an annual certificate from the state of Kentucky.).
- Staff who applies pesticides who are not certified will work directly under the supervision of a certified applicator.
- Staff will apply pesticides and fertilizers using proper applicator equipment and confirm that the application is following the proper manufacturer settings for spray nozzles, bottom feed hopper settings, and proper calibrations of applicator pressure for the type of material being applied.
- Staff will insure that pesticides and fertilizers are applied in a minimum amount adjacent to storm drains.
- Cleaning of spray or applicator equipment is permitted if the location is greater than 100 feet from a creek, stream, or drainage ditch.
- No pesticide or fertilizer may be sprayed on water surfaces, ponds, or lakes.
- No pesticide or fertilizer may be disposed of by burying the excess material on site.
- Applications of pesticides must be recorded and documented in EKU service files.

- EKU attempts to limit the volume of pesticide application through spot treatment and using less pesticide when infestations are light.

9.4 Preventive Practices - Pesticide Fertilizer Storage

Good storage practices for pesticides and fertilizers are inexpensive way of preventing pollution. The following storage practices are used at KEU to reduce stormwater pollution and prevent groundwater impact:

- All pesticides and fertilizers are stored in their original labeled containers until used in a labeled applicator.
- Pesticides and fertilizers are stored under roof on an impervious surface.
- Pesticide and fertilizer containers are triple rinsed when emptied with the rinse water collected and recycled through the applicator system (i.e. there is no discharge of pesticide or fertilizer contaminated water to the storm sewer or the sanitary sewer).
- Empty pesticide and fertilizer containers will be disposed of in a landfill permitted by the State of Kentucky Division of Waste Management.
- MSDS sheets are maintained in the immediate area where pesticides and fertilizers are stored.
- Emergency equipment for a spill release response is immediately available at the L.O. Martin Building.
- Pesticide and fertilizer inventories will be taken periodically to insure that product does not become obsolete through lack of use and to confirm that there have been no leaks, spills, or damages to containers.

9.5 Preventive Practices - Good Housekeeping

Good housekeeping practices are inexpensive way of preventing pollution. The following good housekeeping practices are used at EKU to reduce stormwater pollution:

- No equipment is stored outside unless it is free of contaminants or covered.
- No drums of bulk materials are stored outside.
- Routine inspections are performed to determine bulk container status.
- Visual inspections are conducted to observe any history of leaks or conditions that could lead to the potential discharge of pollutants.
- Containers are stored away from direct traffic routes to prevent accidental spills.

- Containers are stored (stacked) according to manufacturer's instructions to avoid damaging the containers from improper weight distribution.
- Drains and catch basis are kept clear and free of debris.
- Drums are stored to prevent direct contact with the ground surface, and possible corrosion due to contact with moisture.

9.6 Preventive Practices - Maintenance Activities

Preventive maintenance of fixed and mobile equipment exposed to stormwater can prevent or reduce the contamination of stormwater and impact on groundwater. EKU does maintain equipment and vehicles used at this site. The following preventive maintenance activities will be used to prevent or reduce stormwater and groundwater pollution:

- Equipment, forklifts, trucks, and trailers are regularly inspected and maintained to prevent leaks or fluids.
- Equipment is maintained inside on solid surfaces with floor drains closed to prevent fluids that may spill or leak during these activities from impacting the environment. Rock and gravel are placed in required areas to reduce erosion due to high stormwater velocity.
- Preventive maintenance programs, on all vehicles, are performed inside to minimize stormwater contamination.
- Waste materials are stored in closed top containers to prevent impact by stormwater.
- Bulk containers of oil and antifreeze are placed in secondary containment.
- Leaking fluids are collected in containers and transferred into proper waste drums with secondary containment.
- Caution signs are placed next to dumpsters and trash containers warning staff and contractors not to place liquids in these containers.
- Maintenance staff will be reminded of good maintenance practices through the use of signs and other visual aids placed by waste containers, wash sinks, and floor drains.

Special waste is collected by EKU and maintained in a manner to prevent impact on the environment. Collection sites have been designated for special waste and are listed in the following table:

SPECIAL WASTE and UNIVERSAL WASTE LOCATIONS

Waste Description	Building / Location	Container Type	Max. Quantity
Used Oil	Black Building Carter Building	Drum Tank	100 Gal 55 Gal
Coal Ash	Middleton Coal Bin	Concrete Silo	unknown
Coal Bottom Ash	Middleton Coal Bin	Concrete Silo	unknown
Batteries	Grounds Shed	Pallet Pan	25
Used Tires	Grounds Shed	Stack	50
Spent Lamps	L.O. Martin Custodial	Box	Designated Area
Recycle CFC	L.O. Martin HVAC	Recovery Tank	300#
Ballasts	Gentry Dock	Pallet Box	Load
Waste Pesticides	Gentry Building Carter Building	Chemical Shed Designated Area	Moved to Moore Science at collection date

9.7 Preventive Practices - Periodic Visual Inspections

Preventive maintenance involves regular visual inspections and periodic testing of facility emergency equipment and operating systems. These inspections reveal conditions that if uncorrected, could result in a release of a pollutant to surface water or groundwater. The following practices are followed to identify the status of tanks, equipment, and storage locations:

- Develop and periodically update the site visual inspection checklists (updates based on new equipment, new storage locations, or modifications to buildings, roads, or site operations).
- Conduct periodic inspections or testing of equipment (See Appendix 5) and correct any noted deficiencies immediately.
- Maintain records of inspections, findings, and actions taken to eliminate the pollutant source.

9.8 Preventive Practices - Petroleum Loading/Unloading [40 CFR 112.7(h)]

Fuel loading into bulk tanks from tankers (fuel supply contractor) and fuel unloading by EKU staff into fleet vehicles and yard equipment is conducted on solid surfaces. In the event of a catastrophic leak, EKU can use the collective capacity of the adjacent storm sewer system and paved parking area to contain the release if necessary.

The storm sewer and adjacent retention areas will contain the fuel / oil until a vacuum truck can be mobilized to remove the fuel. The phone number for the vacuum service will be posted at the fuel storage tank. Absorbent pads will be used to collect any freestanding oil outside the containment area.

Preventive practice - disconnect Warning System: State law requires that the operator filling the storage tank from a tanker truck must be in control of a shut-off valve during the transfer process. This replaces the need for an automatic disconnect warning system.

The tank truck attendant is on duty by the truck at all times during unloading and will immediately shutoff fuel to the bulk tank to prevent accidental release during the fuel transfer process. All tanks with the exception of the USTs are fitted with overfill prevention measures that include an overfill alarm and a visual level indicator. All product transfers are constantly monitored.

Preventive practice - tank truck examination: The tank truck driver is responsible for examination of drains and outlets on vehicle prior to loading used motor oil, unloading petroleum products (including grease/fat at the cafeteria, diesel fuel, and gasoline), and prior to departure of the tank truck from the premises. An EKU staff person or representative must be present during transfer of petroleum product.

9.9 Preventive Practices - Brittle Fracture [40 CFR 112.7(i)] SPCC

EKU currently does not have any field-constructed bulk petroleum storage tanks and therefore has not conducted an evaluation of tanks for risk of discharge related to failure due to brittle fracture as specified in 40 CFR 112.7(i).

If EKU does install a field-constructed aboveground container and that container undergoes a repair, alteration, reconstruction, or a change in service that might affect the risk of a discharge or failure due to brittle fracture or other catastrophe, or has discharged oil or failed due to brittle fracture failure or other catastrophe; then EKU will evaluate that bulk container for risk of discharge or failure due to brittle fracture or other catastrophe, and as necessary, take appropriate action. This action will be documented and retained in EKU Facilities Services files.

9.10 Preventive Practices - Petroleum Transfer Operations [40 CFR 112.8(d)]

EKU stores diesel fuel for fleet vehicles and yard equipment in a double wall 1000 gallon AST along the east wall of the Black Building.

EKU stores gasoline in two 600 gallon AST's adjacent the Black Building for yard equipment.

EKU stores diesel fuel in AST's and UST's for use in generators and fire pumps. Details of these tanks are in Appendix 3.2.

EKU stores fats and greases from the cafeteria operation in 200 gallon steel tanks on the back dock of the cafeteria building.

There are transfer pipes and hoses used to deliver petroleum from these bulk tanks to mobile vehicles owned by EKU. With the exception of the cafeteria fats and grease, the petroleum (diesel fuel and gasoline fuel for vehicles) is transferred from bulk mobile tankers to the tanks upon filling and from these tanks by flexible hoses with pressure stop fuel dispensers.

The transfer pumps and fuel dispensers are locked when not in use.

Protective practices for buried tanks

1. The McGregor Diesel UST is registered with the Division of Waste Management UST Branch
2. EKU has developed a UST program consistent with the elements identified in the new UST regulations (referenced in Appendix 21)
3. McGregor UST piping has cathodic protection on all pipes
4. The McGregor UST is monitored following the UST program for leaks
5. Transfers from mobile bulk tankers into the UST are supervised by EKU staff who are present at UST filling.

Protective practices for above ground tanks

1. All above ground petroleum containers (larger than 55-gallons) are either double wall steel tanks or are placed in secondary containment with sufficient volume to retain a rupture or spill of the contents of the largest tank in the containment area.
2. Tanks are place on solid surfaces away from drains or storm drains.
3. Tanks are periodically examined (see 10 tank integrity testing) and corrective action is taken as necessary.
4. Tank supports for aboveground piping are examined and corrective action is taken as necessary.
5. Tanks and piping are adequately protected with bumper guards at the fuel dispensing location or otherwise located in areas not normally accessible to vehicular traffic.
6. Filling areas have sufficient lighting at night for detection of spills and to prevent accidents (vehicular collision).
7. EKU will use spill booms for spill protection during transfer operations.

9.11 Preventive Programs - Employee Training [40 CFR 112.7(f)]

Employees involved in activities that could impact stormwater pollution or contribute to groundwater contamination are given awareness training with regards to the goals and objectives of the combined SPCC/GPP and SWQMP annually. Training attendance is documented. Documentation is kept in EKU Facilities Services files.

10.0 CONTAINER INTEGRITY TESTING [40 CFR 112.7(C)(6)]

10.1 Container Integrity Testing Regulations

This section of the Plan addresses the integrity testing required by the SPCC regulations (40 CFR 112) for bulk containers storing petroleum product. This section does not describe any regulatory requirement to conduct integrity testing for containers or tanks that do not store petroleum and are therefore not subject to the specific SPCC regulations. For purposes of this section, the term bulk container will be used to describe any storage tank or container storing petroleum product and equal to or larger than 55-gallons. For clarification, the use of the term "bulk container" and the term "tank" will be used interchangeably in this section and have the same meaning as defined in the Federal SPCC regulations.

The SPCC regulations at 40 CFR 112.8(c)(6) state that a facility required to prepare a SPCC must:

> *Test or inspect each aboveground container for integrity on a regular schedule and whenever you make material repairs. You must determine, in accordance with industry standards, the appropriate qualifications for personnel performing tests and inspections, the frequency and type of testing and inspections, which take into account container size, configuration, and design (such as containers that are: shop-built, field-erected, skid-mounted, elevated, equipped with a liner, double-walled, or partially buried). Examples of these integrity tests include, but are not limited to: visual inspection, hydrostatic testing, radiographic testing, ultrasonic testing, acoustic emissions testing, or other systems of non-destructive testing. You must keep comparison records and you must also inspect the container's supports and foundations. In addition, you must frequently inspect the outside of the container for signs of deterioration, discharges, or accumulation of oil inside diked areas. Records of inspections and tests kept under usual and customary business practices satisfy the recordkeeping requirements of this paragraph.*

EKU is subject to the SPCC regulations as previously discussed in this plan. As required by 40 CFR 112.8(c)(6), EKU has prepared and implemented a periodic integrity testing program for bulk petroleum storage containers that addresses the regulatory requirements stated above.

10.2 Bulk Container Integrity Testing Program [40 CFR 112.8]

EKU has developed the following bulk container inspection and testing program to comply with the requirements of 40 CFR 112.8(c)(6) by using an industry standard -, the Steel Tank Institute (STI) "Standard for the Inspection of Aboveground Storage Tanks," SP001 Issued July 2006, 4th Edition as a guide. The STI SP001 standard identifies inspection and testing protocols based on the type of containment, size of tank, and location of the tanks. The STI SP001 standard describes monthly and annual visual inspections, checklists to record these inspections, and periodic Certified External Inspection. The certified external inspection per STI SP001 must be conducted by an inspector who is certified to conduct this type of inspection, based on the certification criteria identified in STI SP001 Section 4, "AST Inspector Qualifications."

An EPA assessment stating that STI SP001 is an acceptable industry standard is included in the testing program procedure included in Appendix 7 of this plan.

10.3 Bulk Containers That Require Integrity Testing

Bulk containers that are classified as a Category 2 or 3 configuration (see STI SP001 standard) must have periodic integrity testing; include external and internal inspections, and have leak testing according to the inspection schedule listed in Table 5.5 of the STI SP001 4th Edition, issued July 2006.

EKU has recorded each bulk petroleum container larger than 55-gallon in Appendix 3.2, including tank type, size, material, date installed, construction, containment and integrity testing schedule as required. Portable containers or operational containers were not included since they are considered transient or temporary.

10.4 Bulk Containers That Do Not Require Integrity Testing

The engineering review of the bulk petroleum containers indicates that EKU stores petroleum in portable tanks, operational containers, and Category 1 bulk tanks only.

Therefore, EKU is subject only to periodic inspections as discussed in this section. If in the future, EKU installs a bulk tank classified as a Category 2 or 3 (as described in the STI SP001 standards) then EKU must fill out the "STI SP001 AST Record" in Appendix 7 to include the inspection schedule for that tank based on its configuration and risk as specified in the STI SP001 standard.

The tank test and inspection program discussed in this section of the Plan is based on guidance in the July 2006 STI SP001 standard. The STI SP001 standard describes tank configurations in Categories ranging from 1 to 3 based on the following conditions:

- Category 1 - Above ground storage tanks (AST) with spill control and continuous release determination methods (CRDM)
- Category 2 - AST with spill control and without CRDM
- Category 3 - AST without spill control and without CRDM

The STI SP001 standard identifies the following tank configurations as Category 1 tanks:

- Elevated AST with spill control and CRDM
- Vertical AST with release prevention barrier (under tank) and spill control
- Double wall AST with CRDM
- AST with secondary containment and CRDM

The STI SP001 standard also identifies the following designations for tank inspections:

- P - periodic visual inspections,
- E(20) - formal external inspections by a certified inspector with a 20 year interval between inspections starting with the date the tank was fabricated (not date installed)
- I - formal internal inspections by a certified inspector, and
- L - leak testing by qualified individual.

The tank inspection schedule recommended by STI SP001 is based on the Category describe above and the size of the container. The STI SP001 standards inspection guide for "Shop-fabricated ASTs" under 30,000 gallons capacity is as follows:

STI SP001 - AST Inspection Schedule - Category 1 Tanks Only			
Size (Gallons)	**Periodic Inspection Forms in Appendix 5**	**External Inspection Certified Inspector**	**Leak Test or Internal Inspection**
Portable (>55 Gal)	Monthly SPCC AST Inspection Form	Not Required	Not Required
55 to 5,000 gal	Monthly SPCC AST Inspection Form and Annual SPCC AST Inspection Form	Not Required	Not Required
5,001 to 30,000 gal		External - Every 20 yr	Not Required
30,001 to 50,000 gal		External - Every 20 yr	Not Required

In addition to the guidance from the STI SP001 standards, the SPCC regulations state that operating equipment containers that store petroleum and are at least 55 gallons in size do not require integrity testing. Transformers at EKU fall into the operational container category as defined in 40 CFR112. Therefore, transformers with capacity equal to or greater than 55 gallons are exempt from integrity testing but must be included in the periodic inspection and checking program.

11.0 COMBINED SPCC/GPP PLAN REVISIONS

Plan	Revision Date	Next Revision Date
SPCC	January 2017	January 2020
GPP	January 2017	January 2020

12.0 PLAN CERTIFICATIONS [40 CFR 112.3]

EKU is required to have administrative certification of plans prepared for certain activities conducted at EKU and subject to federal and state regulations. The following chart describes those regulatory plans that are required by this facility based on one or more of the following regulatory compliance elements:

1. Bulk materials in storage or use (oil in excess of 1,320 gallons, bulk storage of materials - e.g. coal pile, bulk storage of water treatment chemicals, bulk storage of solvents),
2. Activities that could impact stormwater (transfer of coal to boiler house, application of pesticides and herbicides),
3. Activities that could impact groundwater (transfer of petroleum to USTs, bulk storage of materials),
4. Services provided by this facility, or
5. Products or wastes produced at this facility.

Certifications Required in the EKU Plan		
Plan Required	**Certification Required**	**Regulation**
SPCC - Spill Prevention Control and Countermeasures Plan	**REQUIRED** - More than 1,320 gallons of petroleum in storage	40 CFR 112
GPP - Kentucky Groundwater Protection Plan	**REQUIRED** - Bulk Materials Stored and Handled (55-gal) Pesticides/Herbicides applied	401 KAR 5:037

12.1 ADMINISTRATIVE CERTIFICATION

This plan requires Facilities Services administration and the reviewing engineer to certify that the plan has been prepared according to the provisions of the applicable regulations and that the actions as described in the plan will be implemented and carried out by administration or operations management of this facility. The certifications included in this section must be signed by University Administration or their designated representative and the certifying engineer to meet the requirements of these regulations.

12.2 REQUIRED - Administrative Approval -SPCC [40 CFR 112.3]

EKU is subject to the provisions of the SPCC regulations due to storing more than 1,320 gallons of petroleum, therefore the following certification must be completed by administration or operations management.

I, Barry Poynter, delegate the authority to implement the provisions of this plan to Paul Gannoe, Bryan Makinen, and their assignees. This delegation is in writing as evidenced by my signature below.

Barry Poynter Vice President, Finance & Administration
Eastern Kentucky University

07/13/2017
Date

12.2.1 Assignment of SPCC Plan Responsibility

I, Paul Gannoe, certify, under penalty of law, that I have personally examined and am familiar with the information submitted in this document. I further certify that all attachments were prepared under my direct supervision in accordance with a system designed to assure that qualified personnel properly gathered and evaluated the information submitted. Based on my inquiry of the person or persons who manage the system, or those persons directly responsible for gathering information; the information submitted is to the best of my knowledge and belief; true, accurate, and complete. I am aware that there are significant penalties for submitted false information, including the possibility of fine and imprisonment for knowing violations.

This SPCC plan is a carefully thought-out plan, prepared in accordance with good engineering practices and has the full approval of University Administration. This plan conforms to the requirements for a SPCC plan found in 40 Code of Federal Regulations 112, Oil Pollution Prevention. We will commit the necessary resources to implement and maintain the provisions of this plan.

Paul Gannoe 7/12/17

Assignee Signature Date

Paul Gannoe - Associate VP, Facilities Services & Capital Planning

Name and Title

I, Bryan Makinen, certify, under penalty of law, that I have personally examined and am familiar with the information submitted in this document. I further certify that all attachments were prepared under my direct supervision in accordance with a system designed to assure that qualified personnel properly gathered and evaluated the information submitted. Based on my inquiry of the person or persons who manage the system, or those persons directly responsible for gathering information; the information submitted is to the best of my knowledge and belief; true, accurate, and complete. I am aware that there are significant penalties for submitted false information, including the possibility of fine and imprisonment for knowing violations.

This SPCC plan is a carefully thought-out plan, prepared in accordance with good engineering practices and has the full approval of University Administration. This plan conforms to the requirements for a SPCC plan found in 40 Code of Federal Regulations 112, Oil Pollution Prevention. We will commit the necessary resources to implement and maintain the provisions of this plan.

_____ _____

Assignee Signature Date

Bryan Makinen - Executive Director of Public Safety & Risk Management.

Name and Title

12.3 REQUIRED - Engineers Certification - SPCC [40 CFR 112.3(d)]

With my signature below, I certify the following:

1. I have personally examined the EKU facility in Madison County, KY.;
2. I am familiar with the current SPCC regulation, 40 CFR 112;
3. This Plan was prepared in accordance with good engineering practices, including consideration of applicable industry standards;
4. The Plan conforms to the requirements of 40 CFR 112, SPCC Plans;
5. Procedures for required bulk container inspections and integrity testing have been established;
6. This Plan is adequate for the facility assuming that the administration implements the plan elements;
7. ~~This Plan conforms to the requirements to prepare a best management practices plan (BMP);~~
8. This Plan conforms to the Kentucky GPP requirements of 401 KAR 5:037; and
9. I have reviewed the facility response to 40 CFR 112 Appendix 2 "Applicability of the Substantial Harm Criteria" and the facility's responses are true, accurate, and complete.

This certification in no way relieves EKU of the duty to prepare and fully implement the elements contained in this Plan document.

3-4-2011

J. Frederick Rial, PE — Date

Kentucky Professional Engineer #19060

STATE OF KENTUCKY
J.FREDERICK RIAL
19060
LICENSED
PROFESSIONAL ENGINEER

12.4 REQUIRED - Administrative Certification - SPCC - Harm Criteria

EKU is subject to the SPCC regulations. The following must be completed. Appendix B to 40 CFR Part 112 is used to determine whether EKU "could reasonably be expected to cause substantial harm to the environment by discharging into or on navigable waters or adjoining shorelines." A facility that has the potential to cause substantial harm to the environment in the event of a discharge must prepare and submit a facility-specific response plan to EPA. The checklist for applicability follows:

Certification of the Applicability of the Substantial Harm Criteria

Facility: Eastern Kentucky University
Richmond, Kentucky

1. Does EKU transfer oil over water to or from vessels and does EKU have a total oil storage capacity greater than or equal to 42,000 gallons?
   Yes ___ No _X_
2. Does EKU have a total oil storage capacity greater than or equal to 1 million gallons and does EKU lack secondary containment that is sufficiently large to contain the capacity of the largest aboveground oil storage tank plus sufficient freeboard to allow for precipitation within any aboveground oil storage tank area?
   Yes ___ No _X_
3. Does EKU have a total oil storage capacity greater than or equal to 1 million gallons and is EKU located at a distance (as calculated using the appropriate formula in Attachment C-III to this appendix [40 CFR 112] or a comparable formula) such that a discharge from EKU could cause injury to fish and wildlife and sensitive environments?
   Yes ___ No _X_
4. Does EKU have a total oil storage capacity greater than or equal to 1 million gallons and is EKU located at a distance (as calculated using the appropriate formula in Attachment C-III to this appendix [40 CFR 112] or a comparable formula) such that a discharge from EKU would shut down a public drinking water intake? For the purposes of 40 CFR part 112, public drinking water intakes are analogous to public water systems as described at 40 CFR part 143.2(c).
   Yes ___ No _X_
5. Does EKU have a total oil storage capacity greater than or equal to 1 million gallons and has EKU experienced a reportable oil spill in an amount greater than or equal to 10,000 gallons within the last 5 years?
   Yes ___ No _X_

I, Paul Gannoe, certify under penalty of law that I have personally examined and am familiar with the information submitted in this document, and that based o n my inquiry of those individuals responsible for obtaining this information, I believe that the submitted information is true, accurate, and complete. I further certify I have reviewed the checklist document identified as "Certification of the Applicability of the Substantial Harm Criteria" and have determined that this facility is not subject to the preparation and submittal of a facility response plan requirements found in 40 CFR 112.20 (a), (f)(1)i, and (f)(1)ii.

Paul Gannoe _____ 7-28-17 _____

Assignee Signature Date

Paul Gannoe - Associate VP, Facilities Services & Capital Planning

Name and Title

12.5 REQUIRED - Administrative Certification - GPP [401 KAR 5:037]

The following certification is to be signed by the responsible University official:

I, Paul Gannoe, certify that this Groundwater Protection Plan complies with the requirements of 401 KAR 5:037, and that I have reviewed the terms of this plan and will implement its provisions. I certify that this document and all attachments were prepared under my direction or supervision in accordance with a system designed to assure that qualified personnel properly gathered and evaluated the information submitted. Based on my inquiry of the person or persons who manage the system, or those persons directly responsible for gathering the information, the information submitted is, to the best of my knowledge and belief, true, accurate, and complete.

Paul Gannoe
Assignee Signature

7/21/17
Date

Paul Gannoe - Associate VP, Facilities Services & Capital Planning
Name and Title

APPENDICES

APPENDIX 1

FIGURE 1 – SITE LOCATION ON TOPOGRAPHIC MAP

FIGURE 2 – SITE LOCATION ON AERIAL MAP (OUTFALL 001)

FIGURE 3 – SITE LOCATION ON GEOLOGIC MAP

FIGURE 4 – TATES CREEK FAULTLINE

FIGURE 5 – WET TRANSFORMER LOCATIONS

FIGURE 6 – AST AND UST LOCATIONS

FIGURE 7 – MIDDLETON COAL BIN

FIGURE 8 – DONALDSON COMPLEX SANITARY & STORM SEWERS

FIGURE 9 – COAL BIN SEDIMENT AND OIL SEPARATORS

Appendix 1

Figure 1: Site Location on Topographic Map

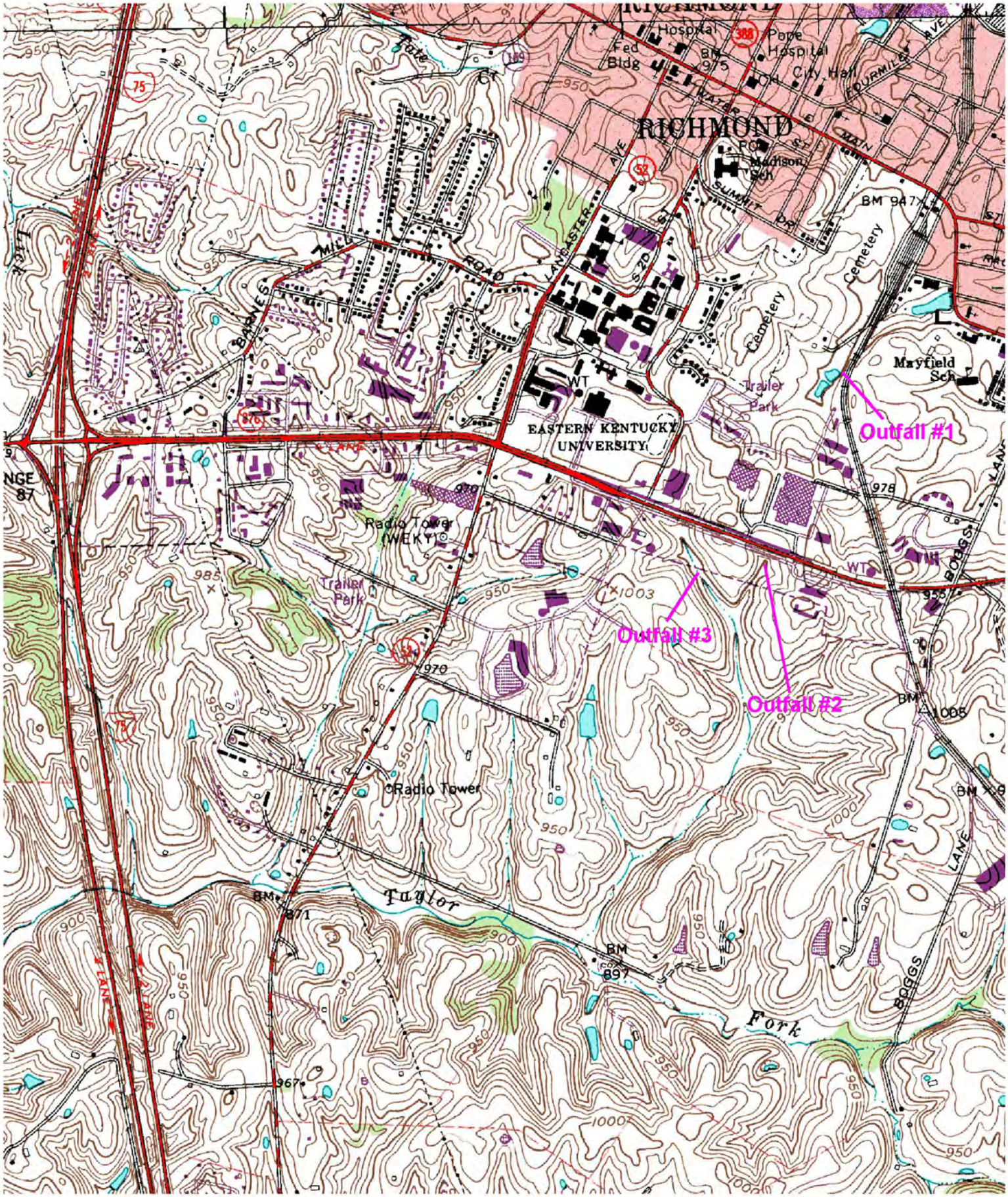

Stormwater Point
- <all other values>
- Area Drain
- Curb Box Inlet
- Drop Box Inlet
- Headwall
- Junction Box
- Manhole
- Outlet Structure
- Yard Drain

Stormwater Line
- UNKNOWN ABOVE/BELOW
- ABOVE
- BELOW
- Line NOT field verified

EASTERN KENTUCKY UNIVERSITY STORM SEWER SYSTEM

CITY OF RICHMOND PLANNING AND ZONING

Stormwater Detention
- Unknown
- Above Ground
- Below Ground
- GIS Outfall

- Water Body
- Stream Reach
- Drainage by Contours
- NHD Streams

Appendix 1

Figure 3: Site Location on Geologic Map

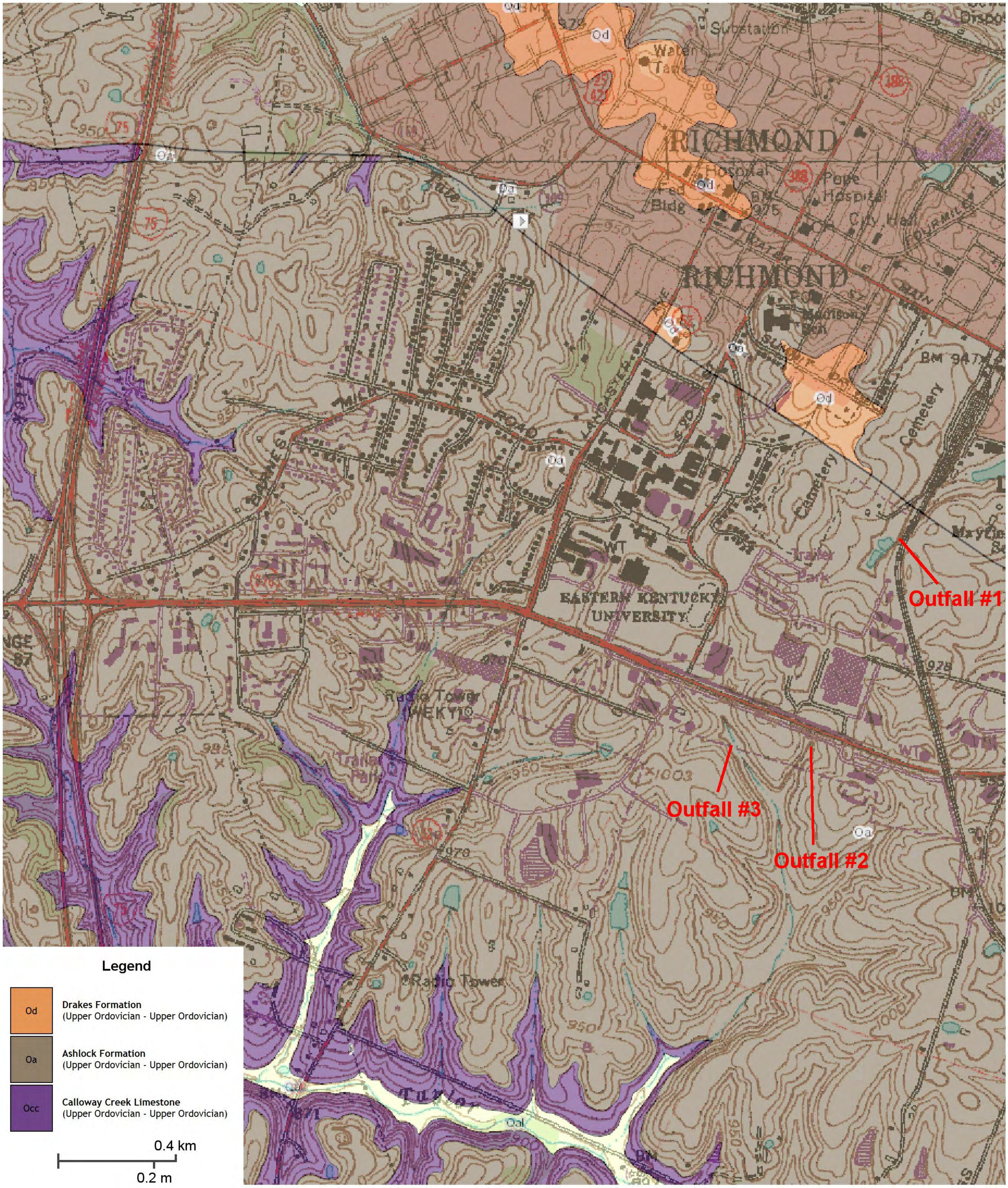

Appendix 1

Figure 4: Tates Creek Faultline

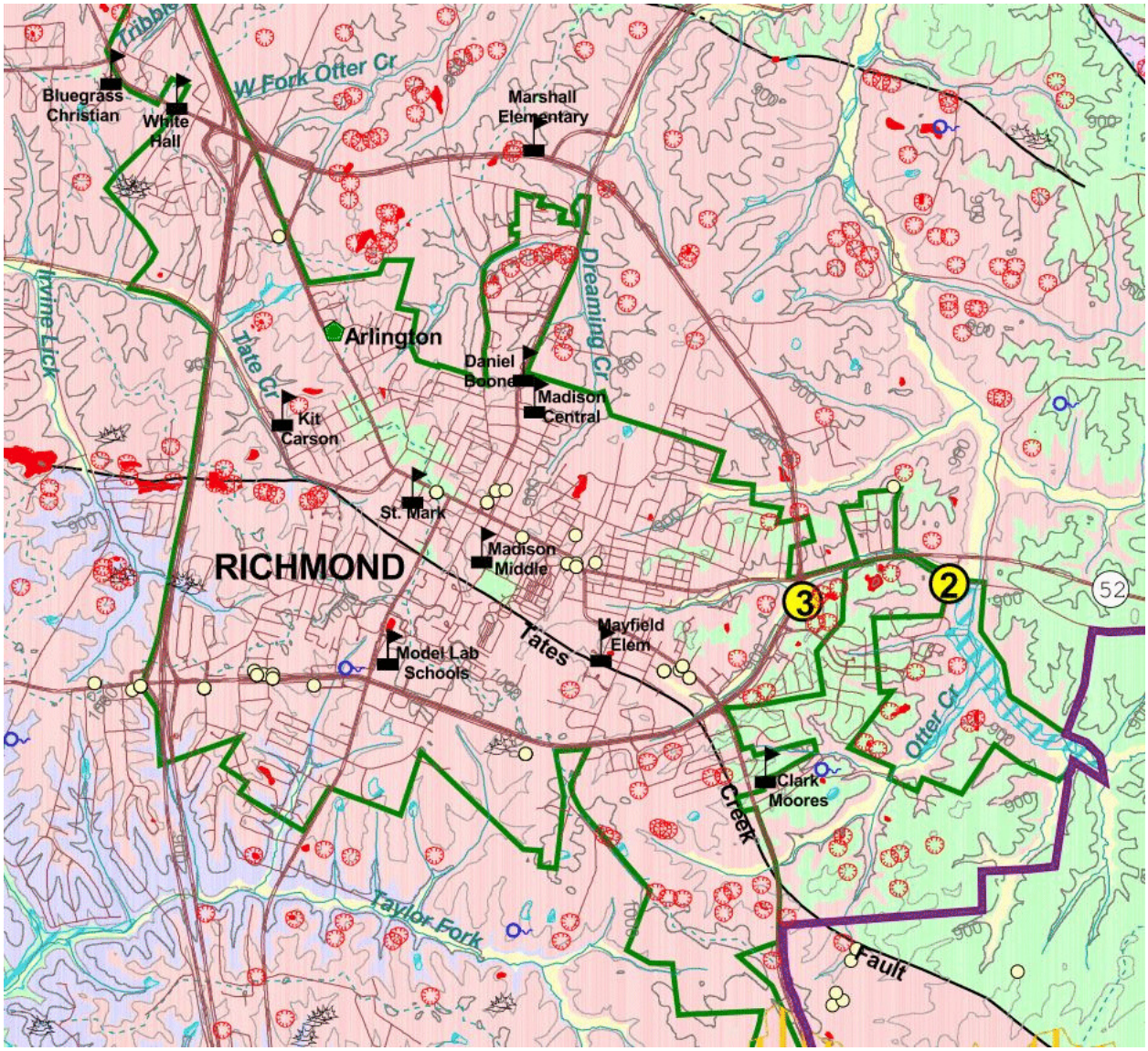

Appendix 1

Figure 5: Wet Transformer Locations

Location	Inside or Outside?	Contents	Capacity (Gal)
Adams	Outside	Silicone	149
Alumni Lighting 1 phase	Outside	Silicone	87
Alumni Lot Basketball	Outside	Mineral	93
Ashland	Outside	Mineral	363
Ashland Lot	Outside	Mineral	93
Ault Lot	Outside	Mineral	62
Begley Field Lights	Outside	Mineral	258
Black	Outside	Mineral	182
Brockton Lot	Outside	Silicone	87
Burnam	Outside	Mineral	139
Burrier	Inside	Silicone	259
Bypass Lights 1 phase	Outside	Silicone	87
Campbell	Inside	Silicone	246
Campbell	Inside	Silicone	235
Carter	Outside	Mineral	125
Carter Greenhouse 1 phase	Outside	Mineral	106
Clay	Inside	Silicone	149
Coates	Inside	Silicone	183
Combs Classroom	Inside	Silicone	220
Commonwealth	Inside	Silicone	249
CRAFT	Outside	Mineral	135
Daniel Boone Drive	Outside	Mineral	115
Daniel Boone Lot	Outside	Mineral	89
Dizney	Outside	Mineral	315
DOCJT Firing Range	Outside	Mineral	243
DOCJT Simulator	Outside	Mineral	328
Donovan	Inside	Silicone	193
Dupree	Inside	Silicone	245
Fire Station Lot	Outside	Mineral	93
Foster	Outside	Mineral	271
Gabbard	Outside	Silicone	93
Gentry	Outside	Mineral	246
Hall Drive Lights	Outside	Mineral	108
Hummel Planetarium	Outside	Silicone	146
Intramural Fields	Outside	Silicone	93

Location	Inside or Outside?	Contents	Capacity (Gal)
Jones	Inside	Silicone	200
Keen Johnson	Inside	Silicone	214
Keene	Inside	Silicone	260
Leach Driving Range	Outside	Mineral	182
Mattox Lot	Outside	Mineral	102
McGregor	Inside	Silicone	214
Miller/Beckham/McCreary	Outside	Mineral	145
Moberly	Outside	Mineral	381
Moore	Inside	Silicone	250
New Residence Hall	Outside	Mineral	307
Palmer	Inside	Silicone	192
Powell 750 KVA 1	Inside	Silicone	249
Powell 750 KVA 2	Inside	Silicone	260
Presnell	Outside	Silicone	102
Ramsey Courtyard	Outside	Mineral	246
Ramsey Front	Outside	Mineral	285
Roark	Inside	Silicone	233
Schoolhouse	Outside	Silicone	87
Smith Observatory	Outside	Mineral	76
Softball North	Outside	Mineral	279
Softball South	Outside	Mineral	93
Sullivan	Outside	Mineral	102
Summit Lot	Outside	Mineral	93
Telford	Inside	Silicone	213
Telford	Inside	Silicone	252
Todd	Inside	Silicone	214
Track East 3 phase	Outside	Mineral	102
Track West 3 phase	Outside	Mineral	102
Turley House	Outside	Mineral	88
Van Hoose 01 02	Outside	Silicone	75
Van Hoose 03 04	Outside	Silicone	87
Van Peursem Pavilion	Outside	Mineral	139
Wallace	Inside	Silicone	252
Weaver	Outside	Mineral	194

Total Petroleum: 12,355

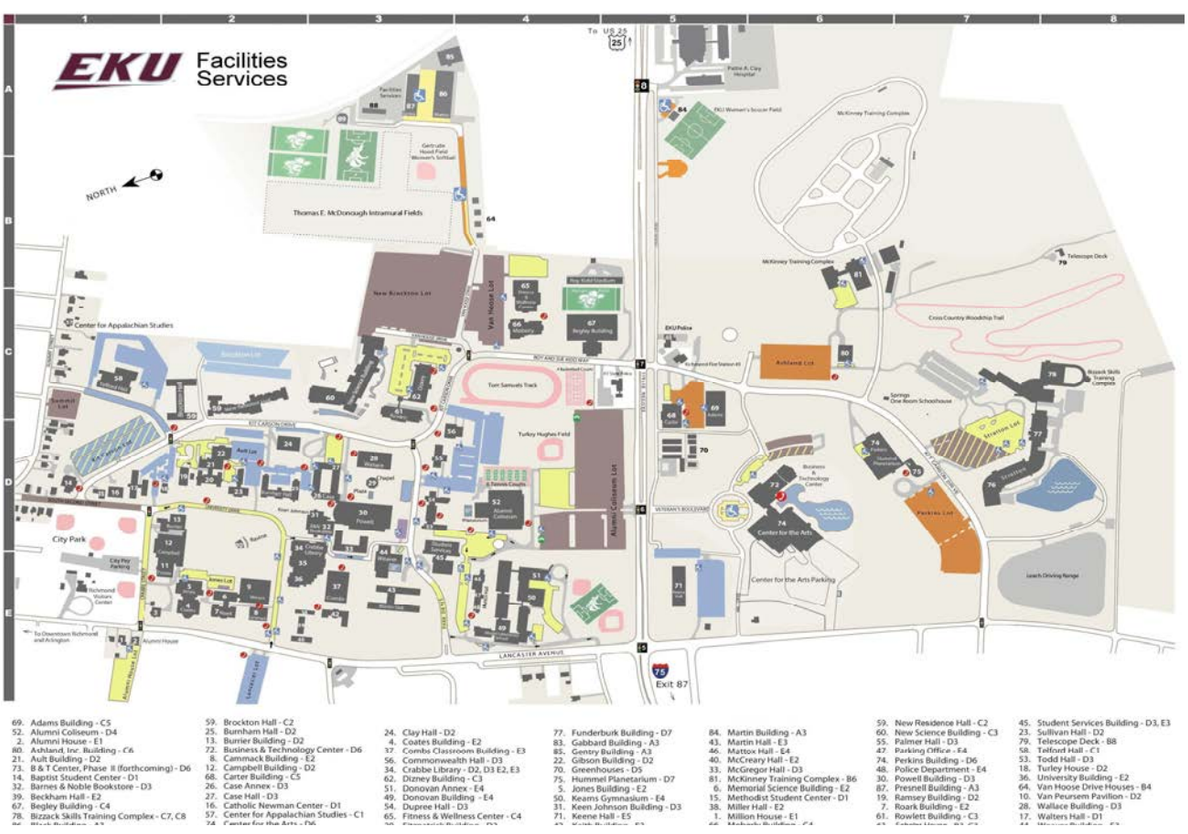

Appendix 1

Figure 6: AST & UST Locations

Bldg No.	Map Grid	Location Name	Container Type	Use	Inside or Outside?	Contents	Tank Capacity (gal)
78	C8	Bizzack	AST	Generator	Outside	Diesel	175
86	A3	Black	AST	Vehicles	Outside	Diesel	1,000
86	A3	Black	AST	Vehicles	Outside	Gasoline	600
86	A3	Black	AST	Vehicles	Outside	Gasoline	600
72	D6	Bus & Tech	AST	Generator	Outside	Diesel	2,000
4	E2	Coates	AST	Generator	Outside	Diesel	500
56	D3	Commonwealth	AST	Fire Prtctn	Inside	Diesel	150
62	C3	Dizney	AST	Generator	Inside	Diesel	65
54	D3	Dupree	AST	Fire Prtctn	Inside	Diesel	185
--	C5	Behind Fire Stn #3	AST	Vehicles	Outside	Diesel	1,000
77	D7	Funderburk	AST	Generator	Inside	Diesel	75
71	E5	Keene	AST	Fire Prtctn	Inside	Diesel	120
33	D3	McGregor	AST	Fire Prtctn	Inside	Diesel	120
81	B6	McKinney Skills	AST	Generator	Outside	Diesel	340
66	C4	Moberly	AST	Generator	Outside	Diesel	147
59	C2	South Hall	AST	Generator	Outside	Diesel	200
60	C3	New Science	AST	Generator	Outside	Diesel	2,500
74	D6	Performing Arts	AST	Generator	Outside	Diesel	550
30	D3	Powell	AST	Generator	Outside	Diesel	366
19	D2	Ramsey Heat Plant	AST	Generator	Outside	Diesel	600
81	B6	Sayre	AST	Generator	Ouside	Diesel	145
45	D3-E4	Whitlock Building	AST	Generator	Inside	Diesel	300
58	C1	Telford	AST	Fire Prtctn	Inside	Diesel	185
						Total AST Capacity:	11,923
33	D3	McGregor	UST	Generator	Outside	Diesel	300
						Total UST Capacity:	300

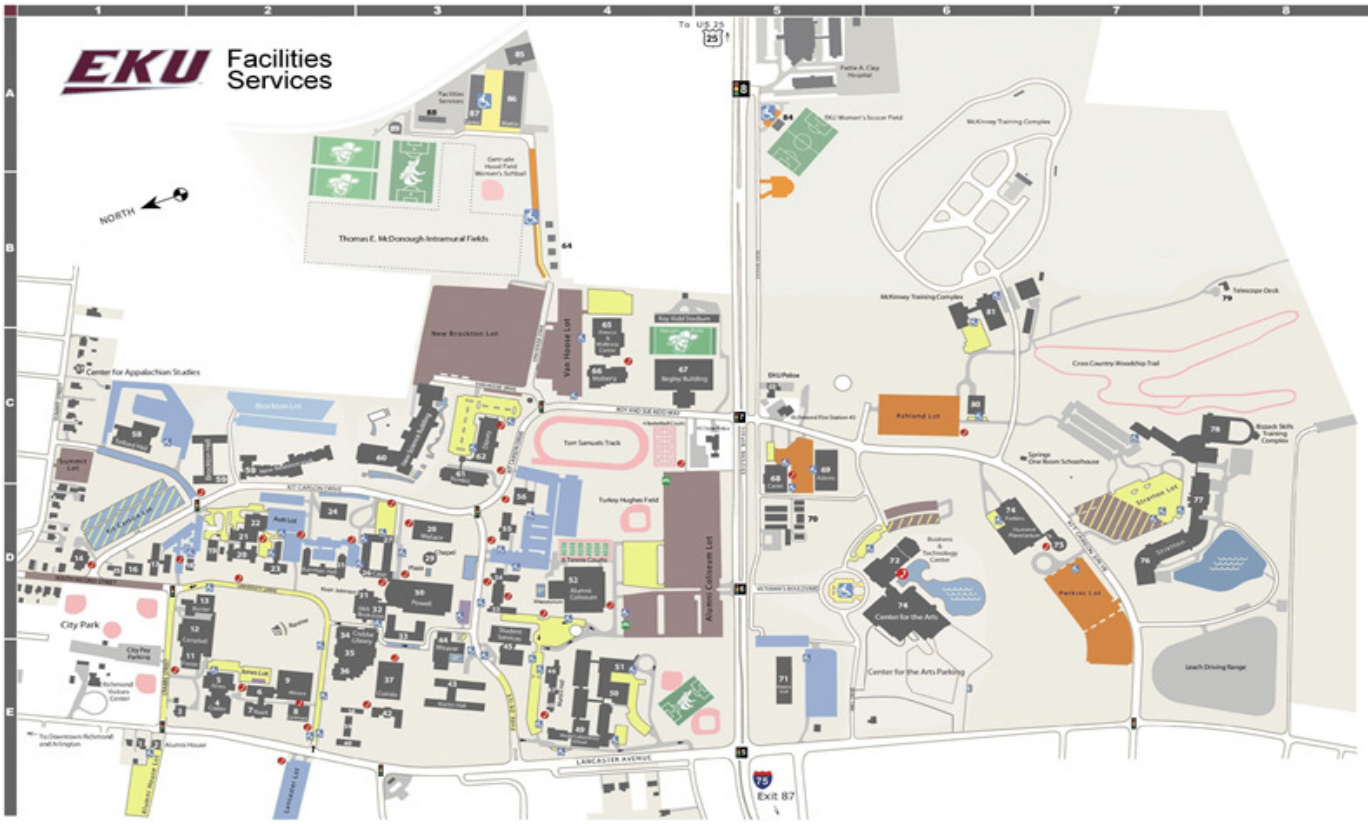

69. Adams Building - C5
52. Alumni Coliseum - D4
2. Alumni House - E1
80. Ashland, Inc. Building - C6
21. Ault Building - D2
73. B & T Center, Phase II (forthcoming) - D6
14. Baptist Student Center - D1
32. Barnes & Noble Bookstore - D3
39. Beckham Hall - E2
67. Begley Building - C4
78. Bizzack Skills Training Complex - C7, C8
86. Black Building - A3
3. Blanton House - E1
59. Brockton Hall - C2
25. Burnham Hall - D2
13. Burrier Building - D2
72. Business & Technology Center - D6
8. Cammack Building - E2
12. Campbell Building - D2
68. Carter Building - C5
26. Case Annex - D3
27. Case Hall - D3
16. Catholic Newman Center - D1
57. Center for Appalachian Studies - C1
74. Center for the Arts - D6
29. Chapel of Meditation - D3
24. Clay Hall - D2
4. Coates Building - E2
37. Combs Classroom Building - E3
56. Commonwealth Hall - D3
34. Crabbe Library - D2, D3 E2, E3
62. Dizney Building - C3
51. Donovan Annex - E4
49. Donovan Building - E4
54. Dupree Hall - D3
65. Fitness & Wellness Center - C4
20. Fitzpatrick Building - D2
11. Foster Music Building - E2
77. Funderburk Building - D7
83. Gabbard Building - A3
85. Gentry Building - A3
22. Gibson Building - D2
70. Greenhouses - D5
75. Hummel Planetarium - D7
5. Jones Building - E2
50. Kearns Gymnasium - E4
31. Keen Johnson Building - D3
71. Keene Hall - E5
42. Keith Building - E3
35. Little Building - E2, E3
84. Martin Building - A3
43. Martin Hall - E3
46. Mattox Hall - E4
40. McCreary Hall - E2
33. McGregor Hall - D3
81. McKinney Training Complex - B6
6. Memorial Science Building - E2
15. Methodist Student Center - D1
38. Miller Hall - E2
1. Million House - E1
66. Moberly Building - C4
9. Moore Building - E2
59. New Residence Hall - C2
60. New Science Building - C3
55. Palmer Hall - D3
47. Parking Office - E4
74. Perkins Building - D6
48. Police Department - E4
30. Powell Building - D3
87. Presnell Building - A3
19. Ramsey Building - D2
7. Roark Building - E2
61. Rowlett Building - C3
63. Scholar House - B3, C3
76. Stratton Building - D7
45. Student Services Building - D3, E3
23. Sullivan Hall - D2
79. Telescope Deck - B8
58. Telford Hall - C1
53. Todd Hall - D3
18. Turley House - D2
36. University Building - E2
64. Van Hoose Drive Houses - B4
10. Van Peursem Pavilion - D2
28. Wallace Building - D3
17. Walters Hall - D1
44. Weaver Building - E3
82. Women's Soccer Field - A5

Appendix 1

Figure 7: Middleton Coal Bin and Stormwater Drains

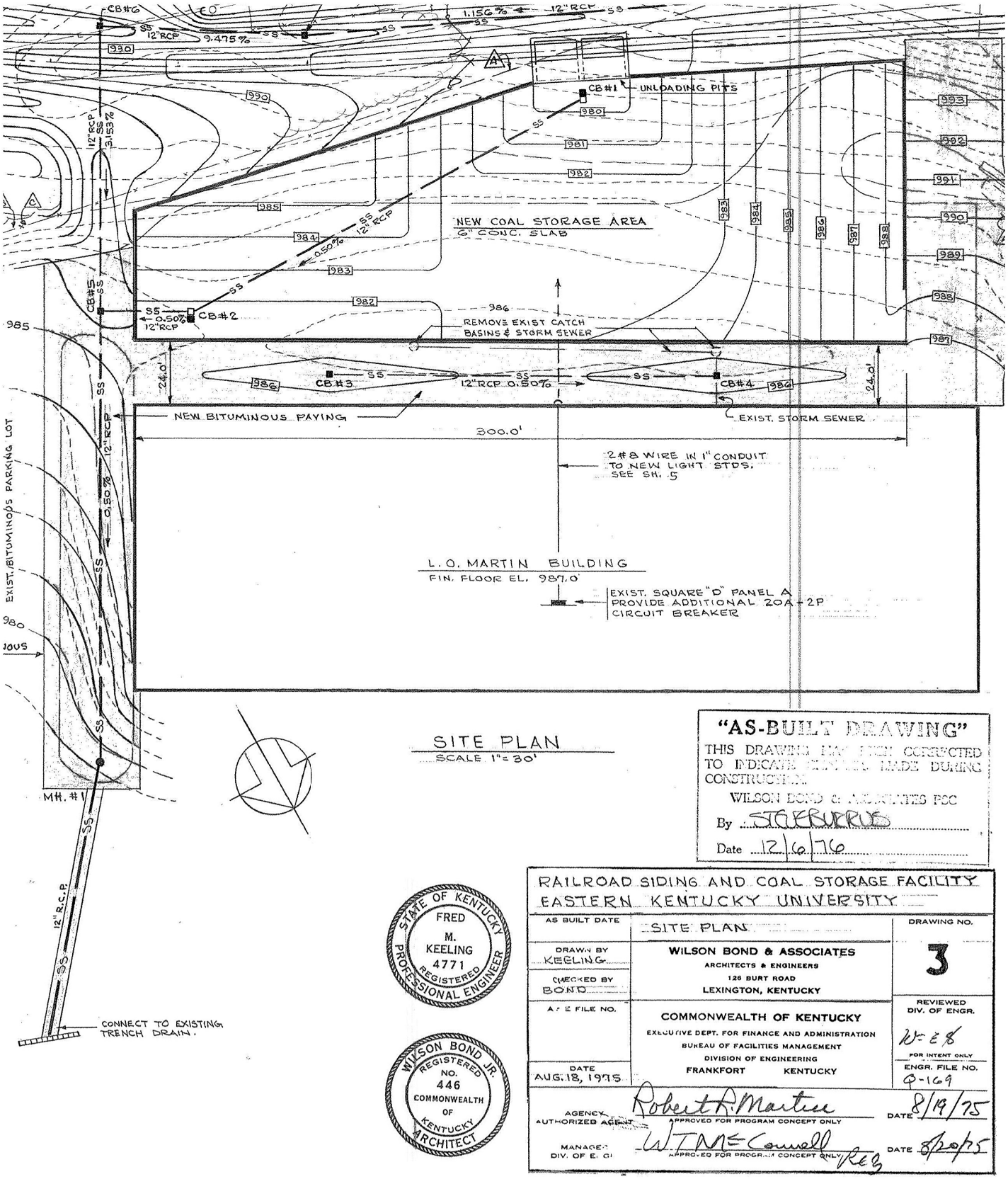

Appendix 1

Figure 8: Donaldson Complex Sanitary & Storm Sewers

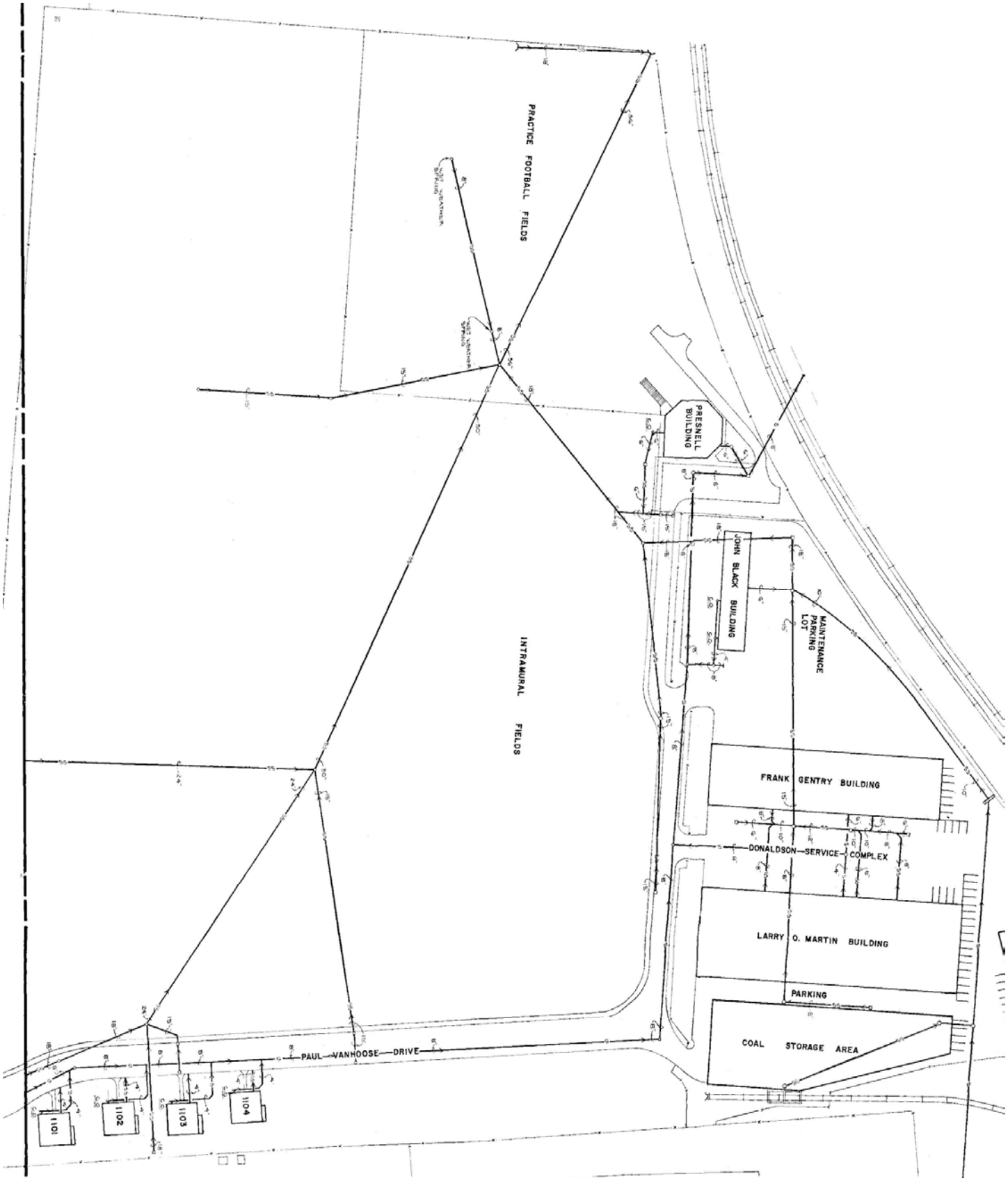

Appendix 1

Figure 9: Coal Bin Sediment and Oil Separators

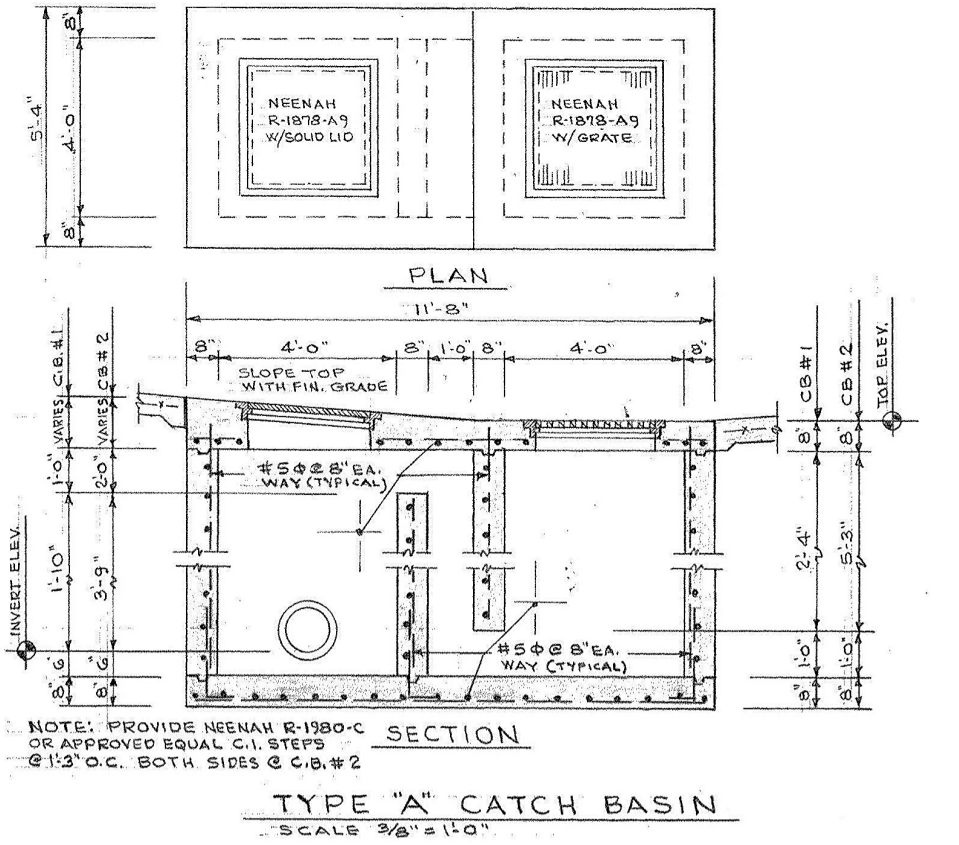

"AS-BUILT DRAWING"
THIS DRAWING HAS BEEN CORRECTED TO INDICATE CHANGES MADE DURING CONSTRUCTION.
WILSON BOND & ASSOCIATES PSC
By STOEBURRUS
Date 12/6/76

STATE OF KENTUCKY FRED M. KEELING 4771 REGISTERED PROFESSIONAL ENGINEER

WILSON BOND JR. REGISTERED NO. 446 COMMONWEALTH OF KENTUCKY ARCHITECT

RAILROAD SIDING AND COAL STORAGE FACILITY
EASTERN KENTUCKY UNIVERSITY

AS BUILT DATE	SITE PLAN	DRAWING NO.
DRAWN BY KEELING	WILSON BOND & ASSOCIATES ARCHITECTS & ENGINEERS 126 BURT ROAD LEXINGTON, KENTUCKY	3
CHECKED BY BOND		
A/E FILE NO.	COMMONWEALTH OF KENTUCKY EXECUTIVE DEPT. FOR FINANCE AND ADMINISTRATION BUREAU OF FACILITIES MANAGEMENT DIVISION OF ENGINEERING FRANKFORT KENTUCKY	REVIEWED DIV. OF ENGR. W-E 8 FOR INTENT ONLY
DATE AUG. 18, 1975		ENGR. FILE NO. 9-169
AGENCY AUTHORIZED AGENT	Robert R. Martin APPROVED FOR PROGRAM CONCEPT ONLY	DATE 8/19/75
MANAGER DIV. OF E. G.	W. T. McConnell APPROVED FOR PROGRAM CONCEPT ONLY REB	DATE 8/20/75

APPENDIX 2

EMERGENCY PHONE NUMBERS

EH&S OR FACILITIES SERVICES CONTACT GUIDE

EMERGENCY ACTION PLAN

Appendix 2.1

Emergency Phone Numbers	
Richmond - Fire	911 land line; cell call 859 624-4776
Richmond - Police	911 land line; cell call 859 624-4776
Richmond - Medical	911 land line; cell call 859 624-4776
Kentucky Environmental Emergency Response Hotline	(502) 564-2380 or (800) 928-2380
National Response Center (NRC)	(800) 424-8802
Richmond Utilities (Gas, Water, Sewer)	(859) 623-2323
Kentucky Division of Water	(502) 564-3410
Kentucky Division for Air Quality	(502) 573-3382
Kentucky Division of Waste Management	(502) 384-4734
Spill Response Contractor: PECCO, Inc.	(859) 887-5508

Spill Respondents	
EKU Police Department (Spill Response Dispatch)	911 (859) 622-1111 (cell)
Spill Response Coordinator: Bryan Makinen – Executive Director of Public Safety and Risk Management	(859) 622-2421 (work) (859) 893-6503 (cell)
Alternate Spill Response Coordinator: Gary Folckemer - Director, Emergency Management & Security	(859) 622-8987 (work) (859) 625-8370 (cell)
Agency Notification Coordinator: Bryan Makinen – Executive Director of Public Safety and Risk Management	(859) 622-2421 (work) (859) 893-6503 (cell)
Alternate Notification Coordinator: Paul Gannoe – Assoc VP, Fac Serv & Cap Plng	(859) 622-1497 (work) (502) 330-7872 (cell)

Appendix 2.2

Contact Guide

Environmental Health & Safety or Facilties Services

ISSUE	EH&S 622-5523	FACILITIES 622-2966	COMMENTS
Air stack emissions issues	X		
Asbestos	X		
Animals (dead)		X	
Biomedical waste	X		
Blood spill (trauma scene)	X		Triaged by EH&S to contractor
Building evacuation maps		X	
Circuit breaker trip and/or electrical fuse blown		X	
Confined space entry and signage	X		
Construction projects - health impacts	X		
Electrical equipment repair or replacement		X	
Electrical safety/Lock out tag out and signage	X		
Emergency eyewash/showers		X	
Ergonomics	X		
Fire extinguisher repair or replacement			Fire Science **622-8477**
Hazardous waste disposal	X		
Insects/Pests/Rodents & dead animals		X	
Keys/Locks		X	
Lab moves planning	X		
Lead	X		
Light bulb replacement		X	
Microbial or mold growth	X		
Odors (gas, burning, unidentified odors)		X	Triaged by Facilities to EH&S
Recycling:			
Chemicals	X		
Regular trash		X	
Universal waste (batteries, fluorescent lamps, cathode ray tubes, consumer electronic devices)	X		
Report unsafe conditions, practices or equipment:			
Employee accident/injury reporting			Managed by Workers' Compensation
Near miss	X		
Employee hazardous/unsafe condition	X		
Broken or faulty equipment		X	
Treads, floorboards or handrails	X		
Standing water/insect control		X	
Sharps disposal locations	X		
Ventilation:			
Ventilation surveys (fume hoods)	X		
Ventilation repair (HVAC, fume hoods)		X	
Water:			
Leaks and flooding in buildings (including fire sprinkler breaks)		X	Triaged by Facilities to EH&S
Water intrusion events discharging into storm sewer drains	X		Triaged by EH&S to Facilities

EMERGENCY ACTION PLAN

EASTERN KENTUCKY UNIVERSITY

RICHMOND CAMPUS

Date Created: August 3rd, 2009

Date Revised: February 11th, 2016

Produced By: EKU Emergency Management

This Page Intentionally Left Blank

Executive Summary

The Eastern Kentucky University Emergency Action Plan (EAP) is designed to provide basic information so that the reader can be better prepared in the event of an emergency or critical incident. The EAP is based upon the International Association of Campus Law Enforcement Administrators' (IACLEA) model, which is rooted in the National Incident Management System (NIMS). The EAP is not designed to give definitive answers for every type of emergency. Each incident is unique and constantly evolving. Only those involved in the incident can make decisions that they believe are correct to ensure their own safety. The EAP provides resource material so that informed decisions can be made.

This summary cannot provide detailed information about every type of incident. For more detailed information, please consult the appropriate section of the Emergency Action Plan. In order to ensure your safety, please follow the basic steps listed below.

- Fires/Fire Alarms – Evacuate the building immediately and do not return until authorized by emergency responders. Always know at least two evacuation routes in case the primary evacuation route is blocked. Do not use elevators.

- Severe Weather – Go to the interior of the lowest level of the structure away from windows, doors, and exterior walls. Remain there until the severe weather has passed.

- Medical Emergencies – Check to ensure you are safe, check the victim, call 911 for assistance, and render aid as necessary and appropriate to your training.

- Crime and Violent Behavior – Protect yourself as best you can and contact police as quickly as possible.

- Hostile Intruder – Includes a physically aggressive person, hostage taker, or an active shooter. Stay as calm as possible, avoid drastic actions that could escalate the situation, and do what is necessary to protect yourself. This could include running away, hiding, playing along, playing incapacitated, or fighting (if absolutely necessary).

- Bomb Threats – Leave the threatened area immediately and notify responders of any suspicious items you notice. Be aware of the potential for a second threat in the evacuation area.

- Hazardous Material Release or Spills – Evacuate the spill area immediately and attempt to secure the area. Attempt to isolate those who have been exposed. Call 911 immediately and provide as much information about the incident as possible.

- Seasonal or Pandemic Flu – To avoid spreading germs, always cover your coughs and sneezes. Wash hands or use sanitizer regularly. If you are sick, do not come to work or class. Get a yearly flu vaccination.

Being prepared is the most important step that anyone can take to minimize their risks during an emergency. Advanced planning can save time when making decisions about what action to take during a critical incident. No document or person can provide concrete answers about a given situation. Individuals are responsible for their own safety and to prepare themselves for emergencies. The information provided in the Emergency Action Plan is designed to provide the resources for informed decision making. We encourage you to familiarize yourself with the information contained within the EAP prior to an occurrence and to review the information on a regular basis.

This Page Intentionally Left Blank

Eastern Kentucky University Emergency Action Plan
Table of Contents

The Eastern Kentucky University (EKU) Emergency Action Plan (EAP) is the base layer of the University's Emergency Management Program. This function is coordinated through the Division of Public Safety and it is a collaborative effort between the Police Department, Emergency Management, Environmental Health and Safety, Risk Management and Insurance, 911, and the rest of the University Community. The EAP is meant to provide all members of the community with important information that is relevant both at work and at home on various emergencies that may occur. The EAP replaces the University's Campus Emergency Response Plan (CERP) and it is the foundation upon which each building and department can participate in crafting individualized Building Emergency Action Plans (BEAP). The formulation of the EAP was based on the International Association of Campus Law Enforcement Administrators (IACLEA) Campus Emergency Operations Planning Guide along with research, best practices, and the experience of officials within the EKU Division of Public Safety.

Section 1 (Page 7) – Building Information – Telephone Numbers – Emergency Notification Systems
(Modifiable to Create a Building or Department Emergency Action Plan)

Section 2 (Page 10) – Immediate Emergency Action and Notification

Section 3 (Page 12-13) – Building Alarms and Individuals with Disabilities
(Modifiable to Create a Building or Department Emergency Action Plan)

Section 4 (Page 14-15) – Evacuation Procedures and Floor Plans
(Modifiable to Create a Building or Department Emergency Action Plan)

Section 5 (Page 18) – Fire Procedures

Section 6 (Page 20) – Tornado

Section 7 (Page 22) – Thunderstorms – Flooding – Power Outages

Section 8 (Page 25) – Medical Emergencies

Section 9 (Page 26) – Crime and Violent Behavior

Section 10 (Page 28) – Hostile Intruder – Hostage Situation – Active Shooter Survival Guide

Section 11 (Page 35) – Psychological Crisis – EKU Faculty 911 Guide to Helping Students in Difficulty

Section 12 (Page 40) – Bomb Threats

Section 13 (Page 44) – Explosion

Section 14 (Page 45) – Hazardous Material Release or Spill - CSEPP

Section 15 (Page 56) – Earthquake

Section 16 (Page 58) – Civil Disorder

Section 17 (Page 61) – Seasonal and Pandemic Flu

Section 18 (Page 66) – Custodial Services – Training and Documentation – Drills

Section 19 (Page 68) – Appendices – Acronyms – Term Definitions – Resource List – Madison County

Section 20 (Page 81) – Acknowledgements

Section 21 (Page 82) – EKU Emergency Guide Poster and Disaster Supplies

Addendums to the Emergency Action Plan

Section 22 – ESIP Buildings, CPS Control Panels, and System Operations

Section 23 – Assembly and Accountability Planning

YOUR EMERGENCY ACTION PLAN

As a member of the University Community, you should be familiar with the University Emergency Action Plan. This manual describes the procedures to follow in a variety of emergencies.

As a building occupant, you need to be familiar with your specific Building Emergency Action Plan. Read it carefully. If you have any questions, consult your Department Safety Coordinator or Building Safety Team member (See the Term Definitions in Appendix A for an explanation of these positions).Keep the following in mind as you read this document:

- Evacuation routes, exit points, and where to report for roll call after evacuating the building
- When and how to evacuate the building
- Locations of emergency materials that may be needed in an emergency, such as fire extinguishers and fire pull alarms
- Proper procedures for notifying emergency responders about an emergency in the building or work area (Dial 911)
- Additional responsibilities, specific to your building
- Remember the following acronym: **PEER – Preparing for Emergencies is Everyone's Responsibility**

FACILITY INFORMATION
(MODIFIABLE TO CREATE A BUILDING OR DEPARTMENT EMERGENCY ACTION PLAN)

Facility Name: _____

Building Supervisor (BS) or Facility Leader (FL): _____ **Email:** _____

BS or FL Address: _____

BS or FL Telephone No.: **Ph:** _____ **Fax/Alt:** _____

Alternate Building Supervisor or Facility Leader: _____ **Email:** _____

Alternate BS or FL Campus Address: _____

Alternate BS or FL Telephone No.: **Ph:** _____ **Fax/Alt:** _____

FACILITY DESCRIPTION: ***(Modifiable to Create a Building or Department Emergency Action Plan)***

_____ is a _____ facility.

The primary uses for the facility include _____.

EAA LOCATION: ***(Modifiable to Create a Building or Department Emergency Action Plan)***

The Emergency Assembly Area location is _____ on the _____ side of the facility.

Departments ***(Modifiable to Create a Building or Department Emergency Action Plan)***
List the departments with employees in your building.

Department	Leadership	Phone	Building	Room

Building / Facility Safety Team ***(Modifiable to Create a Building or Department Emergency Action Plan)***
All departments with employees in your building should be represented on your team.
List team members and positions (chair, vice-chair, other officers, members, etc.).

Name	Department	Phone	Building	Room

Critical Operations ***(Modifiable to Create a Building or Department Emergency Action Plan)***
In this section, include information about critical operations that require special care during an emergency. These areas should have their own plans to ensure the safety and security of materials and information housed there. Be sure to check with each department before completing this section. Employees may need to notify University Police and Richmond Fire/Rescue Departments about the following critical operations:

Operation	Room	Department	Responsible Person	Phone

EMERGENCY NOTIFICATION SYSTEMS

Eastern Kentucky University has implemented a multi-modal emergency notification system to inform the community about incidents and emergencies affecting campus. Realizing that message redundancy is a necessity, Eastern Kentucky University has seven primary notification systems available for the community. Any one, or a combination, of the alert methods listed below may be used depending on the nature and severity of the event.

The primary message creator and/or sender is a Public Safety Team Member. A Public Safety Team Member is any one of the following positions: Telecommunicator, Police Supervisor (i.e. Lieutenant / Sergeant), Compliance & Telecom Manager, Emergency Manager, Chief of Police, and/or Executive Director of Public Safety. Each position has the authority to create and/or send Emergency Notifications and/or Timely Warnings. Each position serves as a back up to the other positions. The message creator and/or sender is the most available team member with the most current and relevant knowledge about the situation. Alert methods to be used are determined by the message creator/sender based on the nature and severity of the event. Alert methods have been pre-determined for various events, however, methods may be altered as deemed appropriate by the message creator/sender.
The Regional Campus Directors, and certain other administrators, are authorized and responsible for creating and sending Emergency Notifications and/or Timely Warnings specific to their campuses.
New technologies and other Emergency Notification Systems are periodically explored and evaluated. This section is subject to change as technology changes.

Systems Include:

- **Siren/Public Address System** - Audible sirens and announcements can be broadcast over four loudspeakers strategically placed on campus. This system can be activated by the EKU Division of Public Safety as well as the Madison County Emergency Management Agency for weather and community emergency notifications.
- **Text Messaging** - An opt-in notification where a text message can be received on your mobile phone. EKU does not charge for this service; however, your carrier may have standard text messaging charges. (Important: Students should re-enroll their mobile phone numbers at the beginning of each semester)
- **Voice Messaging** - An opt-in notification where a voice message can be received on your mobile or home phone. (Important: Students should re-enroll their mobile phone numbers at the beginning of each semester)
- **Email Messaging** - This notification provides an email message about an event. Current students, faculty, and staff are automatically registered to receive notifications on their EKU email account and cannot opt-out of this type of notification. You can opt-in to receive emails on other email accounts. Community members are encouraged to check their email, frequently throughout the day, to be sure they see any message sent by this alert method.
- **RSS Feeds -** A message can be posted on the Emergency Management, Police Department, or University web pages.
- **Network Messaging** - A visual notification can be made across computers connected to the EKU network. This requires a program to be installed on your computer that monitors the server. When an alert is sent out, a pop-up box appears on your screen. No personal information is gathered or transmitted with the use of this alerting system.
- **Social Media** - EKU can use Twitter and Facebook to send notifications to the community. These social systems require the user to check to receive any messages posted. Follow @EKUEmergency on Twitter and LIKE EKU Emergency Management on Facebook.

To Register:

Current Students, Faculty, and Staff:

- Log on to EKU Direct (https://web4s.eku.edu/pls/prod/twbkwbis.P_WWWLogin) with your EKU ID and PIN.
- Under the Main Menu, click the Rave Mobile Safety - Emergency Notifications link.
- Register to receive text, voice, and/or email messaging. *Note: Email messages are automatically sent to all current EKU email addresses and you cannot opt-out of receiving messages on your EKU email account.
- To receive text and voice messages you must opt-in by entering your telephone number(s).

Other Community Members:

- Goto the Rave Site Look-up and search for Eastern Kentucky University (http://www.getrave.com/login/eku).
- Click the Register Button in the upper right hand corner.
- Register your information and select to receive text, voice, and/or email messaging.

Network Messaging:
All EKU issued PC's have the Alertus network messaging program installed. If you wish to have the program installed on your personal PC or a MAC, please email Gary Folckemer (gary.folckemer@eku.edu).

EMERGENCY PROCEDURES

Immediate Emergency Action – Calling for Help and Notifications

EMERGENCY ACTION

In a **Life-Threatening Emergency - Dial 911**
From a Campus or Public Telephone or use an Emergency Call Box.

Dial **911** from your cell phone (Off Campus) and
Dial **859-622-1111** or **859-622-2821** from your cell phone (On Campus).
Program these numbers into the speed dial function of your cell phone.

1. **Protect Yourself First – Create and Manage Distance and Shielding from Threats**
   Generally, the farther you move away from a threat, and the more solid and stable objects that you position between you and a threat, the safer you are from that threat.

2. **Call 911 or 859-622-1111 or 859-622-2821**

   - Give your name, location, and phone number.
   - Describe the nature of the incident and its location.
   - Describe any injuries, weapons, hazards, devices, and property involved.
   - Describe the people involved, where they are, and where they went.

   - Stay on the line with the Dispatcher until help arrives.
   - Keep the Dispatcher updated on any changes so responding units can be updated.
   - Even if you cannot communicate, keep the line open.
   - The Dispatcher may be able to learn more about what is happening.

(Note)
Dialing 911 from an on campus (land line or corded) telephone, using an emergency call box, or dialing 859-622-1111 or 859-622-2821 from a cellular phone will connect you to the EKU Public Safety Dispatch Center.
Dialing 911 from a cellular phone or dialing 859-624-4776 will connect you to the Madison County 911 Center.
In any case, you can summon the help you need – Police – Fire – Rescue – HAZMAT – EMS.

INFORMATION NUMBERS

Department Telephone Number: **See Departments Listed on Page 8.**

Police: Eastern Kentucky University Police Department
911 (Campus Phone) or 859-622-1111 or 859-622-2821 (Outside / Cell Phone)
http://www.police.eku.edu/

Fire/Rescue:Richmond Fire/Rescue Department
911 (Emergency) or 859-624-4776 or 859-623-1164 (Non Emergency)
http://fire.richmond.ky.us/

Ambulance: Madison County Emergency Medical Services (EMS)
911 (Emergency) or 859-624-4776 or 859-623-5121 (Non Emergency)
http://www.madisoncountyky.us/

Medical Facilities:

EKU Student Health Services
521 Lancaster Avenue
103 Rowlett Building
Richmond, KY 40475
859-622-1761
http://www.healthservices.eku.edu/

Baptist Health Richmond
789 Eastern By Pass
Richmond, KY 40475
859-623-3131
https://www.baptisthealthkentucky.com/richmond/

Other Area Hospital Systems:

University of Kentucky Health Care
859-257-1000 or 1-800-333-8874
http://ukhealthcare.uky.edu/home/

Good Samaritan Hospital
859-226-7000
http://ukhealthcare.uky.edu/gs/ed/

Saint Joseph Health System
859-313-1000
http://www.kentuckyonehealth.org/saintjosephhospital

Baptist Health Lexington
859-260-6100
https://www.baptisthealthkentucky.com/lexington/

Occupational Medicine Center
646 University Shopping Center
Richmond, KY 40475
859-623-0535
859-623-1950 (Instant Care Center for after hours)

EKU Counseling Center
521 Lancaster Avenue
571 Student Services Bldg
Richmond, KY 40475
859-622-1303
http://www.counseling.eku.edu/

Madison County Health Department
216 Boggs Lane
Richmond, KY 40475
859-623-7312

Disability Support Services: EKU Office of Services for Individuals with Disabilities 859-622-2933
http://www.disabilities.eku.edu/

Facilities Services: EKU Facilities Services 859-622-2966
http://www.facilities.eku.edu/

Information Technology: EKUITHelpdesk 859-622-3000
http://www.it.eku.edu/

Environmental Health and Safety: 859-622-2421 or 859-622-1111
http://ehsrmi.eku.edu/

Kentucky Environmental Emergency Response Hotline: 502-564-2380 or 800-928-2380

Lexington Fayette Urban County Government DEEM: 859-258-3784

Lexington Fayette Urban County Government Emergency Operations Center: 859-258-3970

Madison County Emergency Operations Center: 859-624-4787

Madison County Joint Information Center: 859-624-4753

National Response Center (NRC): 800-424-8802

Richmond Utilities (Gas, Water, Sewer): 859-623-2323

Kentucky Division of Water: 502-564-3410

Kentucky Division for Air Quality: 502-573-3382

Kentucky Division of Waste Management: 502-384-4734

Spill Response Contractor: Pecco, Inc.: 859-887-5508

Poison Control Center: 1-800-222-1222

Other Telephone Numbers or Resources You Commonly Use:
(Modifiable to Create a Building or Department Emergency Action Plan)

Building Alarm(s) ***(Modifiable to Create a Building or Department Emergency Action Plan)***

Indicate all of the alarms that occupants should be able to identify. There may be several alarms in or near your building, such as evacuation alarms, elevator alarms, biosafety hood or fume hood alarms. Describe the different sounds, the significance of each alarm, and the appropriate occupant response to each alarm. Add other steps, actions, or precautions specific to your building or work area.

Fire Alarm ***(Modifiable to Create a Building or Department Emergency Action Plan)***

This building is equipped with a fire alarm system. The fire alarm is capable of being perceived above ambient noise or light levels by persons in the affected portions of the building. The alarm is distinctive and recognizable as a signal to evacuate the area or to perform actions designated under the emergency action plan.

(Or)

There is No Fire Alarm System in the _____.
Evacuation should be Accomplished through Voice or Touch
Directing Occupants to Leave the Area.
Any Person May Order an Evacuation if they Perceive Danger in the Area.

Because There is No Automatic Monitoring, Someone Must Call 911 to Report the Emergency.

If you hear any other alarm that you do not recognize, use caution, protect yourself, contact EKU Public Safety at 911 or 859-622-1111, and report the alarm.

Evacuation Plan ***(Modifiable to Create a Building or Department Emergency Action Plan)***

Upon being alerted to an emergency requiring evacuation, all occupants should immediately leave their area, closing the doors behind them, and proceed to the nearest exit or exit stairway. Occupants should exit or ascend/descend the stairs and exit in an orderly manner. Upon exiting the building, all occupants should gather in the Emergency Assembly Area.

The Emergency Assembly Area location is _____.

This plan was and can be further developed with input from the staff of EKU Public Safety, taking into account specific building and occupant needs. EKU Public Safety can be reached at 859-622-1111.

Sheltering In Place
Because sheltering in place may be the protective action recommendation for several emergencies with differing risks, and because sometimes the initial recommendation is to shelter in place followed by relocation, there is no single set of shelter in place procedures. Based on the type of emergency, such as Tornado, Hostile Intruder, or Hazardous Material Release Outside, you should consult each relevant section for guidance.

Emergencies change as they progress. The questions to ask yourself are:
Am I safer inside or outside? Where am I safest inside? Where am I safest outside?

Disabilities ***(Modifiable to Create a Building or Department Emergency Action Plan)***

With regard to persons requiring assistance in evacuation:

_____ Building/Hall/Facility has _____ exit stairwells.

Stairwell _____ is on the _____ part/side/end of the building and serves the _____ through _____ floors.
It exits inside/outside on the _____ floor. Egress can be made through the doors on the _____ side/end of the building.

Etc. . . .

The _____ Building/Hall/Facility _____ entrance/exit doors, at the _____ level/floor, on the _____ side/end, exit outside at grade and are accessible for individuals with mobility impairment.

Etc. . . .

All other doors have steps.

If someone with mobility impairment cannot exit, or if they cannot climb or descend the stairs, they may take refuge in a room.

Your safety is very important to EKU. Maintaining your safety is a joint responsibility, between you, the University, and emergency response agencies. The person most responsible for your safety is you. Here is some important advice so that you can take responsibility for your own personal safety and make informed decisions about actions you can take in an emergency.

Generally, during an emergency, where evacuation is the protective action recommendation, like a fire or fire alarm, everyone should evacuate. If someone cannot evacuate, for any reason, they should take refuge in a safe place, like an enclosed stairwell or in a room.

Any individual in need of rescue must call 911 (from a campus phone) or 859-622-1111 or 859-624-2947 (from a cell phone) and report their location to emergency responders. The individual should ask someone, who is evacuating, to relay their location and their need for assistance to the emergency responders. Individuals with hearing loss can call Public Safety via TDD at 859-622-6279 and/or text message someone who can inform authorities. Wherever and whenever possible, an individual with special needs, that might require assistance, should identify a trustworthy individual to assist them as much as is reasonable in an emergency. This principle should be thought of as a buddy system. It is recommended that individuals with disabilities or other special needs obtain a cell phone for use in emergencies. It is also recommended that a flashlight and light colored cloth be kept handy. The cloth can be fastened to the outside closure of a refuge area or they can wave a flashlight or light colored cloth from a window to let the Fire/Rescue Department know where they are located. Help will take time to arrive because responders must assess the situation, make the area safe, and have resources available to conduct rescue operations. If there is no life threatening emergency, the Fire/Rescue Department will not attempt to come to your specific location.

More information about disability preparedness can be found at:
http://www.redcross.org/www-files/Documents/Preparing/A4497.pdf and http://www.disabilities.eku.edu/

Building / Facility Evacuation Procedures *(Example Only – Modify to Fit Your Circumstances)*

These procedures represent best practices and are included here for reference. These procedures may be in effect during regular business hours if there are sufficient faculty and staff members present and available to implement them.

Individuals should determine their best course of action based upon the information presented in this Emergency Action Plan.

When Alerted to an Emergency Requiring Evacuation - Evacuate.

Prior to Evacuation:

Communication should be accomplished in person, through telecommunications, or through the use of runners.

- A high visibility vest and/or other appropriate equipment/materials may be located in the Facility Offices.
- The Facility Leader, their Alternate, or their designee (i.e. Admin Asst) should bring out this equipment.
- The Building Safety Team should gather to await assignments in the EAA (Describe Location).
- The Facility Leader, their Alternate, or their designee should make assignments as needed.
- A Facility Occupant should Call 911 to Report the Emergency.

During the Evacuation:

- When an alert is made, everyone must evacuate. Staff members that have been issued emergency equipment should take that equipment with them prior to exiting the area. If staff members are known to be out of the area, their equipment should be gathered up and taken outside during the evacuation. The Facility Leader, their Alternate, or their designee should bring out the high visibility vest and/or other equipment/materials.
- On the way out, check on others who might have disabilities or other special needs.
- Help them as much as is reasonable and safe.
- Once outside of the building, all staff should report to the EAA (Describe Location).
- A Primary Event Manager may be established and they may put on the vest.
- The remaining staff should be assigned an area entrance/exit to monitor.
- The Facility has _____ Exit Areas:
  ( ) Describe Location, ( ) Describe Location,
  ( ) Describe Location, and ( ) Describe Location.
- Entrances/Exits should be covered as well as possible given the staff present at the time.
- Staff assigned to an area entrance should attempt to:
  - Keep people at a safe distance from the area.
  - Keep others from entering the area prior to the all clear.
  - Monitor the status of the event.

Fire:

Generally, when a building fire alarm sounds, Kentucky law mandates that everyone must evacuate the building.

- Close your door as you leave.
- If possible, know at least two escape routes from wherever you are.
- If smoke or flame is detected, and no alarm is sounding, alert others as you exit.
- During the evacuation, go to the nearest exit or exit stairwell.
- Do not use the elevator, if there is one.
- If smoke is present, keep low to the floor.
- Once outside, move away from the area.

When Evacuation is Not Possible:

In a fire or fire alarm situation, always check doors to see if they are hot or warm to the touch before you open them. If heat or smoke prevents you from evacuating, return to your room and use towels or other cloth items to seal around the door. Hang a white object in the window and reclose the window (if it opens) as much as possible. Do not reopen your window (if it opens) unless forced to do so by smoke. After you have sealed your door, immediately call 911 and advise emergency responders of your location and situation. Wait for help to arrive.

Post Incident:

- At the completion of the incident, the Fire/Rescue Department [or other appropriate Emergency Official(s)] should release the building to the Facility Leadership. The facility should be pronounced all clear, or clear with conditions for re-occupancy. The Facility Leadership should then communicate the all clear or the clear with conditions to the area entrance monitors in person, via communications equipment, or by the use of a runner.
- On the way in, staff members should check on others who might have disabilities or other special needs and assist them as much as is reasonable and safe.

Sheltering In Place

Because sheltering in place may be the protective action recommendation for several emergencies with differing risks, and because sometimes the initial recommendation is to shelter in place followed by relocation, there is no single set of shelter in place procedures. Based on the type of emergency, such as Tornado, Hostile Intruder, or Hazardous Material Release Outside, you should consult each relevant section for guidance.

Emergencies change as they progress. The questions to ask yourself are:
Am I safer inside or outside? Where am I safest inside? Where am I safest outside?

Floor Plans

Fire Procedures

Fire Procedures

EMERGENCY ACTION

E.A.C.H. person is responsible for their own safety.

If you discover a fire or smoke or if you hear a fire alarm:

E. Evacuate the Building – Get Out– Don't Use Elevators – Use Stairs – Close (Don't Lock) Doors to Contain Fire

A. Alert Others – Activate the Fire Alarm (If Not Already Activated) – Help Others as You Leave

C. Call (911) For Help – Report to Emergency Responders Information about the Fire/Smoke/Need for Rescue

H. Have A Plan – You Must Protect Yourself – Be Knowledgeable About Fire Safety and Take Every Alarm Seriously

Fire Safety Information

A building occupant is required by law to evacuate the building when a fire alarm sounds. Know at least two escape routes from wherever you are. Review escape routes with others in your area. Practice escaping from each room with and without light(s). Never use the elevator to evacuate. In case of fire, always use the stairs to get out. Make sure to practice using the stairs as part of your escape plan. If someone has difficulty climbing up or down stairs, make sure to incorporate a contingency for this in your evacuation plans.

Do not re-enter the building or work area until you have been instructed to do so by the emergency responders.

To protect yourself, it is important to understand some basic characteristics of fire. Fire spreads quickly; there is no time to gather valuables or make extraneous phone calls. In just two minutes, a fire can become life-threatening. In five minutes, a residence can be engulfed in flames. Heat and smoke from fire can be more dangerous than the flames. Inhaling the super-hot air can sear your lungs. Fire produces poisonous gases that make you disoriented and drowsy. Instead of being awakened by a fire, you may fall into a deeper sleep. Asphyxiation is the leading cause of fire deaths, exceeding burns by a three-to-one ratio.

What to do during a fire:

If your clothes catch on fire:

- Stop, Drop, and Roll - until the fire is extinguished.
  Running only makes the fire burn faster.

To escape afire:

Hot Door	Cool Door
Do not open. Escape through a window if you can. If you cannot escape, hang a white or light-colored cloth outside the window, alerting Fire/Rescue to your presence. Seal yourself in for safety if you cannot exit due to smoke or fire. Call the fire department to report your exact location. Gather in a room with a window to await their arrival. Close all doors between you and the fire. Use duct tape or towels to create a seal around the door and over air vents in order to keep smoke from coming in.	Open slowly and ensure fire and/or smoke is not blocking your escape route. If your escape route is blocked, shut the door immediately and use an alternate escape route. If clear, leave immediately through the door and close it behind you. Be prepared to crawl. Smoke and heat rise. The air is clearer and cooler near the floor.

More information about fire safety can be found on the EKU Environmental Health & Safety Webpage:
http://ehsrmi.eku.edu/

- Check closed doors for heat before you open them. If you are escaping through a closed door, use the back of your hand to feel the top of the door, the doorknob, and the crack between the door and door frame before you open it. Never use the palm of your hand or fingers to test for heat - burning those areas could impair your ability to escape a fire (i.e., ladders and crawling).
- Crawl low under any smoke to your exit - heavy smoke and poisonous gases collect first along the ceiling.
- Close (but do not lock) doors behind you as you escape to delay the spread of the fire.
- Stay out once you are safely out. Do not reenter.
- Once outside, move to a clear area away from the affected building(s) or to a designated assembly area. Keep streets, fire lanes, hydrants, and walkways clear for emergency responders.
- Check in with your family and check in with someone who has responsibility for you.
- Seek medical attention if needed.

- **Basic First Aid for Burns:** Stop, Cool, and Cover.

  Stop the burn. Cool the burn with cool running water. Cover the burn loosely with sterile dressings.
  (When cooling the burn make certain that there is no contact with electricity)
  (Loose sterile dressings can help prevent infection)

Fire Extinguishers:

You should only consider using a fire extinguisher if you have been trained on how to use one and only if you feel confident that you can use one safely.

A portable fire extinguisher can save lives and property by putting out a small fire or containing it until the fire department arrives; but portable extinguishers have limitations.

Because fire grows and spreads so rapidly, the number one priority is to get out safely.

Safety Tips:

- Use a portable fire extinguisher when the fire is confined to a small area, such as a wastebasket, and is not growing; everyone has exited the building; the fire department has been called or is being called; and the room is not filled with smoke.
- To operate a fire extinguisher, remember the word **PASS**:
  Pull the pin. Hold the extinguisher with the nozzle pointing away from you, and release the locking mechanism. Test it by discharging a short blast onto the floor before you enter where the fire is.
  Aim low. Point the extinguisher at the base of the fire.
  Squeeze the lever slowly and evenly.
  Sweep the nozzle from side-to-side.
- For the home, select a multi-purpose extinguisher (can be used on all types of home fires) that is large enough to put out a small fire, but not so heavy as to be difficult to handle.
- Choose a fire extinguisher that carries the label of an independent testing laboratory.
- Read the instructions that come with the fire extinguisher and become familiar with its parts and operation before a fire breaks out. Local fire departments or fire equipment distributors often offer hands-on fire extinguisher trainings.
- Install fire extinguishers close to an exit and keep your back to a clear exit when you use the device so you can make an easy escape if the fire cannot be controlled. If the room fills with smoke, leave immediately.
- Know when to go. Fire extinguishers are one element of a fire response plan, but the primary element is safe escape.

Tornado Procedures

Know tornadoes inside and out.

Tornado Watch	Tornado Warning
Tornadoes are possible. Remain alert for approaching storms. Watch the sky and stay tuned to NOAA weather radio, commercial radio, or television for information. Local Emergency Alert System Radio Stations: WCBR 1110 AM, WEKY 1340 AM, WKXO 1500 AM, WIRV 1550 AM,WEKU 88.9 FM, WCYO 100.7 FM, WLFX 106.7 FM	**Warning ! Warning ! – Danger ! Danger !** A tornado has been sighted or indicated by weather radar. TAKE SHELTER IMMEDIATELY. **D = Downstairs:** Get to the lowest level you can, a basement if you have one, or just the ground floor. **U = Under:** Get under something sturdy like a heavy table or staircase to protect yourself from flying objects. Protect your head. **C = Center:** Go to the center part of a permanent structure. Put as many walls as you can between you and the outside. A closet, hallway or bathroom in the middle of the building is a good choice. **K = Keep Away:** Keep away from exterior doors and windows, which can be sources of flying glass and debris. http://www.lex18.com/Global/story.asp?s=8061636

If you are under a Tornado Warning, seek shelter immediately!

If you are in:	Then:
A structure (e.g. residence, small building, school, nursing home, hospital, factory, shopping center, high-rise building)	Go to a pre-designated shelter area such as a safe room, basement, storm cellar, or the lowest building level. If there is no basement, go to the center of an interior room on the lowest level (closet, interior hallway) away from corners, windows, doors, and outside walls. Put as many walls as possible between you and the outside. Get under a sturdy table and use your arms to protect your head and neck. Do not open windows.
A vehicle, trailer, or mobile home	Get out immediately and go to the lowest floor of a sturdy, nearby building or a storm shelter. Mobile homes, even if tied down, offer little protection from tornadoes.
The outside with no shelter	Lie flat in a nearby ditch or depression and cover your head with your hands. Be aware of the potential for flooding. Do not get under an overpass or bridge. You are safer in a low, flat location. Never try to outrun a tornado in urban or congested areas in a car or truck. Instead, leave the vehicle immediately for safe shelter. Watch out for flying debris. Flying debris from tornadoes causes most fatalities and injuries.

Tornadoes are nature's most violent storms. Spawned from powerful thunderstorms, tornadoes can cause fatalities and devastate a neighborhood in seconds. A tornado appears as a rotating, funnel-shaped cloud that extends from a thunderstorm to the ground with whirling winds that can reach 300 miles per hour. Damage paths can be in excess of one mile wide and 50 miles long. Every state is at some risk from this hazard.
Some tornadoes are clearly visible, while rain or nearby low-hanging clouds obscure others. Occasionally, tornadoes develop so rapidly that little, if any, advance warning is possible.

Before a tornado hits, the wind may die down and the air may become very still. A cloud of debris can mark the location of a tornado even if a funnel is not visible. Tornadoes generally occur near the trailing edge of a thunderstorm. It is not uncommon to see clear, sunlit skies behind a tornado.
The following are facts about tornadoes:

- They may strike quickly, with little or no warning.
- They may appear nearly transparent until dust and debris are picked up or a cloud forms in the funnel.
- The average tornado moves Southwest to Northeast, but tornadoes have been known to move in any direction.
- The average forward speed of a tornado is 30 MPH, but may vary from stationary to 70 MPH.
- Tornadoes can accompany tropical storms and hurricanes as they move onto land.
- Waterspouts are tornadoes that form over water.
- Tornadoes are most frequently reported east of the Rocky Mountains during spring and summer months.
- Peak tornado season in the southern states is March through May; in the northern states, it is late spring through early summer.
- Tornadoes are most likely to occur between 3 p.m. and 9 p.m., but can occur at any time.

Be alert to changing weather conditions.

- Listen to NOAA Weather Radio or to commercial radio or television newscasts for the latest information.
- Look for approaching storms
- Look for the following danger signs:
    - Dark, often greenish sky
    - Large hail
    - A large, dark, low-lying cloud (particularly if rotating)
    - Loud roar, similar to a freight train.

If you see approaching storms or any of the danger signs, be prepared to take shelter immediately.

You can check current watches, warnings and advisories for Madison County Kentucky by checking the links for the National Oceanic and Atmospheric Administration and the National Weather Service Websites.

http://www.weather.gov/lmk/

http://forecast.weather.gov/MapClick.php?CityName=Richmond&state=KY&site=LMK&textField1=37.7428&textField2=-84.2936&e=0

After the Storm Passes:

- Watch out for fallen power lines and stay out of the damaged area until it has been deemed safe to enter.
- Listen to the radio for information and instructions.
- Use a flashlight to inspect your property for damage.
- Do not use candles or open flame at any time.

Thunderstorms – Flooding – Power Outage – Procedures

Thunderstorm

Severe Thunderstorm Watch	Severe Thunderstorm Warning
Severe thunderstorms are likely to occur. Watch the sky and stay tuned to NOAA weather radio, commercial radio, or television for information.	**Warning ! Warning ! – Danger ! Danger !** Severe weather has been reported by spotters or indicated by radar. Warnings indicate imminent danger to life and property to those in the path of the storm.

What to do during a Thunderstorm

If you are:	Then:
In a forest	Seek shelter in a low area under a thick growth of small trees.
In an open area	Go to a low place such as a ravine or valley. Be alert for flash floods.
On open water	Get to land and find shelter immediately.
Anywhere you feel your hair stand on end (which indicates that lightning is about to strike)	Squat low to the ground on the balls of your feet. Place your hands over your ears and your head between your knees. Make yourself the smallest target possible and minimize your contact with the ground. Do not lie flat on the ground.

Call 911 for medical assistance as soon as possible.
The following are things you should check if you attempt to give aid to a victim of lightning, if you have been trained in CPR and First Aid, and if you can help safely:

- Breathing - if breathing has stopped, begin mouth-to-mouth resuscitation.
- Heartbeat - if the heart has stopped, administer CPR.
- Pulse - if the victim has a pulse and is breathing, look for other possible injuries. Check for burns where the lightning entered and left the body. Also be alert for nervous system damage, broken bones, and loss of hearing and eyesight.

Flood

Flood Watch	Flood Warning
Flooding is possible. Be prepared to move to higher ground. Tune in to NOAA weather radio, commercial radio, or television for information.	**Warning ! Warning ! – Danger ! Danger !** Flooding is occurring or will occur soon; If advised to evacuate, do so immediately. **Flash Flood Warning** SEEK HIGHER GROUND ON FOOT IMMEDIATELY.

What to do during a Flood

Preparing for Flood:	Evacuation Tips:
Be aware of streams, drainage channels, canyons, and other areas known to flood. Flash floods can occur in these areas with or without such typical warnings as rain clouds or heavy rain. Construct barriers (levees, beams, floodwalls) to stop floodwater from entering your area. Flooding can occur due to a Fire Emergency. If your area is protected by an automatic sprinkler system, it can activate during a fire. In an automatic sprinkler system, a network of piping filled with water under pressure is installed behind the walls and ceilings, and individual sprinklers are placed along the piping to protect the areas beneath them. Because the water is in the piping, the fire sprinkler system is always "on call". If fire breaks out, the air temperature above the fire rises and the sprinkler activates when the air temperature gets high enough. The sprinkler sprays water forcefully over the flames, extinguishing them completely in most cases, or at least controlling the heat and limiting the development of toxic smoke until the fire department arrives. Only the sprinkler(s) nearest the fire activate. Smoke will not activate sprinklers. The activation of an automatic sprinkler system will cause flooding and water damage to areas beneath the sprinkler heads. You should take precautions to protect property from water damage. Items should not be placed directly on the floor and valuables should be insured.	Secure your area. If you have time, bring outdoor property inside. Move essential items to an upper floor or at least up off of the floor. Turn off utilities at the main switches or valves if instructed to do so. Disconnect electrical appliances. Do not touch electrical equipment if you are wet or standing in water. Do not walk through moving water. Six inches of moving water can make you fall. If you have to walk in water, walk where the water is not moving. Use a stick to check the firmness of the ground in front of you. Do not drive into flooded areas. If floodwaters rise around your car, abandon the car and move to higher ground if you can do so safely. You and the vehicle can be quickly swept away. Driving Flood Facts: Six inches of water will reach the bottom of most passenger cars causing loss of control and possible stalling. A foot of water will float many vehicles. Two feet of rushing water can carry away most vehicles including sport utility vehicles and pick-ups.

Power Outage

Preparing for a Power Outage:	What to do during a Power Outage:
Assemble Essential Supplies: ○ Flashlight ○ Batteries ○ Portable radio with batteries ○ At least one gallon of water ○ A small supply of food ○ Due to the risk of fire, do not use candles during a power outage **Top Safety Tips for a Power Outage:** ○ Only use a flashlight for emergency lighting. Never use candles! ○ Turn off electrical equipment you were using when the power went out. ○ Avoid opening the refrigerator and freezer. ○ Do not run a generator inside a home or garage. ○ If you use a generator, connect the equipment you want to power directly to the outlets on the generator. Do not connect a generator to a home's electrical system. ○ Listen to local radio and television for updated information. **Report Problems:** **Utility Failure or Mechanical Issues:** **EKU Facilities Services** 521 Lancaster Avenue Gentry Building Richmond, KY 40475 Phone 859-622-2966 Fax 859-622-2325 http://www.facilities.eku.edu/ **EKU Information Technology (IT)** 521 Lancaster Avenue 207 Combs Classroom Bldg Richmond, KY 40475 Phone 859-622-1986 Fax 859-622-2266 http://www.it.eku.edu/ **General Information Number** ○ Off Campus : 859-622-1411 ○ On Campus : 2-1411 **IT Helpdesk** 859-622-3000	**What to do During a Power Outage:** ○ Turn off or disconnect any appliances, equipment (like air conditioners) or electronics you were using when the power went out. When power comes back on, it may come back with momentary "surges" or "spikes" that can damage equipment such as computers and motors in appliances like the air conditioner, refrigerator, washer, or furnace. ○ Leave one light turned on so you'll know when your power returns. ○ Leave the doors of your refrigerator and freezer closed to keep your food as fresh as possible. If you must eat food that was refrigerated or frozen, check it carefully for signs of spoilage. ○ Use the phone for emergencies only. Listening to a portable radio can provide the latest information. Do not call 9-1-1 for information -- only call to report a life-threatening emergency. ○ If you have a telephone instrument or system that requires electricity to work (such as a cordless phone or answering machine), plan for alternate communication, including having a standard telephone handset (the kind that plugs into the wall and has a cord to the handset), cellular telephone, or radio. ○ Eliminate unnecessary travel, especially by car. Traffic signals will stop working during an outage, creating traffic congestion. ○ Keep your car fuel tank at least half full because gas stations rely on electricity to power their pumps. ○ Remember that equipment such as automated teller machines (ATMs) and elevators may not work during a power outage. ○ If it is hot outside, take steps to remain cool. Move to the lowest level of your home, as cool air falls. Wear lightweight, light-colored clothing. Drink plenty of water, even if you do not feel thirsty. If the heat is intense and the power may be off for a long time, consider going to a movie theater, shopping mall, or "cooling shelter" that may be opened in your community. Listen to local radio or television for more information. ○ Remember to provide plenty of fresh, cool water for others including your pets. ○ If it is cold outside, put on layers of warm clothing. Never burn charcoal for heating or cooking indoors. Never use your oven as a source of heat. If the power may be out for a prolonged period, plan to go to another location (relative, friend, or public facility) that has heat to keep warm. ○ http://www.redcross.org/www-files/Documents/pdf/Preparedness/PowerOutage.pdf

Medical Emergencies

EMERGENCY ACTION

1. **Check – Call – Care**

   Check the scene for safety.
   Check the victim(s) for consciousness.

   Call EMS (Emergency Medical Services).
   Dial 911 or use an Emergency Call Box
   or Dial 859-622-1111 or 859-622-2821
   from your cell phone if you are on campus.

   Care for illness and injuries within the scope of your training.
   Provide only the care that you are trained and certified to provide.

2. **Do not move people unless safety dictates.**

Madison County EMS (Emergency Medical Services) is the primary Advanced Life Support Ambulance Service for Madison County, Kentucky. They will respond to medical emergencies on campus. Any injury occurring as a result of an existing hazardous condition should be reported to the University Police Department.

Illness or Injury to Students
During operational hours, University students are eligible for care at the Student Health Center.
Students with minor illnesses or injuries may be referred to the Student Health Center.
EKU Student Health Services- 521 Lancaster Avenue - 103 Rowlett Building - Richmond KY 40475
859-622-1761http://www.healthservices.eku.edu/

Illness or Injury to Faculty, Staff, Students, Guests and Visitors
Emergency treatment for job-related injury or medical illness can be obtained by calling the University Police Department Dispatch Center: Dial 911 from a campus telephone, use an Emergency Call Box, or Dial 859-622-1111 or 859-622-2821from your cell phone if you are on campus. The dispatch Telecommunicator will summon the appropriate emergency response personnel. The University Police Department will respond automatically and the Fire/Rescue Department may respond if needed.

An Employer's Report of Illness or Injury form must be completed for all incidents of job related illness and injury. Please contact Risk Management and Insurance 859-622-5523 for forms and assistance.

First Aid
If you provide First Aid, you must consider the following:
- Will I place myself in harm or jeopardy?
- Is immediate action needed in order to save a life?

First Aid is First Aid Only. Do not jeopardize your health or the health of the patient. Wait for professional help if you are not able to provide first aid safely or if you are not trained and certified in first aid.

To Obtain Prompt Emergency Medical Services - Call for an Ambulance (Madison County EMS).
- Check the scene for safety. Try to get an idea of what happened.
  And if it is safe to do so, check the victim(s) for consciousness.
- Dial 911, use an Emergency Call Box, or dial 859-622-1111 or 859-622-2821 from your cell phone if you are on campus. Ask for an ambulance. Madison County Emergency Medical Services (EMS) will be summoned.
- Provide the Dispatcher with:
  - Your name and telephone number.
  - Location of the emergency (building and room number).
  - The extent of the accident/illness/injury and number of people involved.
  - Location where someone will meet the ambulance and escort the emergency responders.
- Care for illness and injuries within the scope of your training.
  Provide only the level of care that you have been trained and certified to give.
- Notify someone in responsible charge of the area or the person(s) involved.

The individual making the call should continue to stay on the phone with the Dispatcher and answer as many questions as possible regarding the condition of the ill or injured person(s) so that information can be forwarded to the emergency responders.

Crime and Violent Behavior

EMERGENCY ACTION

In Progress Incidents:

1. **Protect Yourself First – Create and Manage Distance and Shielding from Threats**
   Generally, the farther you move away from a threat, and the more solid and stable objects that you position between you and a threat, the safer you are from that threat.

2. **Call 911** from a Campus or Public Telephone or use an Emergency Call Box.

   Dial **911** from your cell phone (Off Campus) and
   Dial **859-622-1111** or **859-622-2821** from your cell phone (On Campus).
   Program these numbers into the speed dial function of your cell phone.

   - **Give your name, location, and phone number.**
   - The Dispatcher should be told that **THE INCIDENT IS IN-PROGRESS.**
   - Describe the nature of the incident and its location.
   - Describe any injuries, weapons, hazards, devices, and property involved.
   - Describe the people involved, where they are, and where they went.

   - Stay on the line with the Dispatcher until help arrives.
   - Keep the Dispatcher updated on any changes so responding units can be updated.
   - Even if you cannot communicate, keep the line open.
   - The Dispatcher may be able to learn more about what is happening.

The University Police Department, located in the Public Safety Building, is staffed 24 hours a day for your assistance and protection. They are available seven days a week all year long.

Reporting Crimes In-Progress
If you are a victim or a witness to any in-progress criminal offense, report the incident as soon as possible to the appropriate Police Department serving your area. You should attempt to provide as much of the following information as possible:

- Nature of the incident. Make sure that the Dispatcher understands that the incident is in-progress!
- Location of the incident.
- Description of suspects involved.
- Injuries that have occurred.
- Description of any weapons involved.
- Description of property involved.

Stay on the line with the Dispatcher until help arrives. Keep the Dispatcher updated on any changes so responding units can be updated. Even if you cannot communicate, keep the line open. The Dispatcher may be able to learn more about what is happening.

Reporting Crimes Not In-Progress
If you have become a victim of a crime and it is not an emergency or life-threatening situation, telephone the local jurisdictional Police Department and be prepared to provide at least the following information:

- Your name.
- Your address.
- Your telephone number.
- A brief synopsis of what occurred.
- Your exact location at the time of the call (campus building, room #, etc.).

Emergency Telephone System

Located at strategic locations on the University Campus are emergency telephone call boxes. The Emergency Call Boxes are mounted on poles, have a maroon colored button operated calling device, and have a blue light mounted on top of the pole.

In the event of an emergency, to use the Emergency Call Box:

- Push the button to send the call.
- The University Police Department Dispatcher will answer the phone.
- Push the button to talk.
- Release the button to listen.
- (Note) This procedure works on the older Emergency Call Boxes.
- (Note) The newer Code Blue Emergency Call Boxes located near the outdoor shelters work like an intercom.
- Push the button to send the call.
- The University Police Department Dispatcher will answer the phone.
- Then just talk as if you were using a speaker phone.

In a matter of only a few seconds, University Police Headquarters will answer the call. Stay on the line with the Dispatcher until help arrives. Keep the Dispatcher updated on any changes so responding units can be updated. Even if you cannot communicate, keep the line open. The Dispatcher may be able to learn more about what is happening.

Hostile Intruder and Hostage Situation

Hostile Intruder and Hostage Situation

EMERGENCY ACTION

Calm – Stay as calm as you can. When hostages panic, hostage takers panic, and the situation can escalate beyond the intruders original intentions. Be alert but maintain a low profile. You can appear calm by following directions and avoiding sensitive topics in any conversation with the hostage taker. Maintain eye contact with the captor when speaking with them but do not stare. Be as polite and friendly as possible.
Avoid drastic action if you are not in immediate danger of death or serious physical injury.
Be observant. You may be released or you may escape.
The personal safety of others may depend on your memory.

Connect – By empathizing or appearing to empathize with your captor, you may become a person to them rather than a bargaining chip. In some cases, by creating a bond, hostages have been able to make their captors unwilling to harm them. By connecting and personalizing the interactions, you buy yourself time by slowing things down. Encourage the negotiation process and keep the focus on outside contact.

Capitalize – While encouraging a negotiated release or some other peaceful conclusion, remain alert to rescue efforts and escape opportunities. Drink water and eat if food is available. Rest when you can. It is important to keep your strength up and remain as healthy as possible. If medications, first aid, or restroom privileges are needed by anyone, say so.

If things change and the intruder becomes an active killer: As a victim you have two basic options

Get Out – Escape any way possible: through doors, windows, or stairs, and run at angles away from the threat, placing cover or obstacles between you and the danger until you are safe.

Take Out – Disarm and disable the intruder as quickly as possible with as much force as needed.

When Police Arrive
Do not pose a threat. Show and empty your hands. Get down on the ground. Follow the orders of the police.

Hostile Intruder and Hostage Situations may be thought of as being of three basic types.

Type One is encountered when the intruder or hostage taker is disturbed in their behaviors, feelings, and attitudes. What they do, how it makes them feel, and how and what they think about their actions can be exacerbated by the influences that they may be under. Influences contributing to or driving their behavior can include alcohol, drugs and emotional states. The individual may not be sane and rational. The purposes for their actions may or may not be clear. Part of a successful resolution to this issue is to think for the other person the way that they would think for themselves in 24 hours when they are no longer under the influences that they are currently under. This is a typical service that police officers perform when they are called to a scene to deal with disturbed individuals.

Type Two is the traditional situation in which the hostage takers try to use hostages as leverage to negotiate for something else of value.

Type Three occurs when an individual or a group takes hostages to accomplish a political, social, or economic agenda or are bent on causing death and destruction to make some statement. One possible goal of the hostage taker(s) might be to destroy the will of an enemies' decision makers rather than to directly confront another's military forces.

As a situation develops, a potential hostage needs to immediately assess the intruder's intent as being either for attention, negotiation or murder.

Hostage situations may go through three typical phases. Recognizing these phases and knowing what to do in each is fundamental to surviving the situation.

Phase One: Capture
This is the most dangerous phase and the one during which the intruder is trying to take control of the environment and the hostages. Victims need to assess the intruder's intent rapidly, avoid attention, and stay low. If the intruder's intent appears to be detaining people and/or controlling a facility for attention or negotiation purposes, victims will most likely move through phases two and three. If, however, the intruder is actively shooting or using other deadly physical force to kill, immediate action is necessary.

As a victim, you have two basic options:

Get Out – Escape any way possible: through doors, windows, or stairs, and run at angles away from the threat, placing cover or obstacles between you and the danger until you are safe.

Take Out – Disarm and disable the intruder as quickly as possible with as much force as needed. Consider that if you are in public with other people on your side you probably outnumber the hostage taker(s). Remember United Airlines Flight 93 on September 11th, 2001. The decision to fight or play incapacitated (as listed in the Active Shooter Emergency Action Guide) is extremely risky. If you fight, you must be valiant, vicious, and victorious and you must know that you will probably be hurt, inured, disabled, or killed. You might however prevent a greater harm from coming to you or others by putting up a good fight. If you do not fight, you might be spared. You could play incapacitated and the intruder might pass you by. Unhindered though, an intruder has an opportunity to inflict multiple wounds, regroup, reload, and generally have his or her way until they are confronted with deadly force. Consider also that there is a tradition in warfare of making sure that the enemy is dead, by inflicting mortal wounds on bodies that a soldier passes by. Again, the decision is a risky one.

Phase Two: Internment
Assuming that you are dealing with someone in need of attention or intent on negotiating for what they really want, an internment period will follow. This may last a few hours, a few days, or even weeks. This is the time when negotiations are taking place and the time to do some planning for various contingencies. During this time, hostages should employ the 3 C's.

Calm – Stay as calm as you can. When hostages panic, hostage takers panic, and the situation can escalate beyond the intruders original intentions. Be alert but maintain a low profile. You can appear calm by following directions and avoiding sensitive topics in any conversation with the hostage taker. Maintain eye contact with the captor when speaking with them but do not stare. Be as polite and friendly as possible.
Avoid drastic action if you are not in immediate danger of death or serious physical injury.
Be observant. You may be released or you may escape. The personal safety of others may depend on your memory.

Connect – By empathizing or appearing to empathize with your captor, you may become a person to them rather than a bargaining chip. In some cases, by creating a bond, hostages have been able to make their captors unwilling to harm them. By connecting and personalizing the interactions, you buy yourself time by slowing things down. Encourage the negotiation process and keep the focus on outside contact.

Capitalize – While encouraging a negotiated release or some other peaceful conclusion, remain alert to rescue efforts and escape opportunities. Drink water and eat if food is available. Rest when you can. It is important to keep your strength up and remain as healthy as possible. If medications, first aid, or restroom privileges are needed by anyone, say so.

Phase Three: Resolution
Research indicates that a majority of all hostages worldwide survive their ordeal one way or another.
Resolutions are typically characterized by one of three options:

Negotiated Release – A negotiated release is the safest and sometimes longest outcome, requiring patience and calmness from all involved.

Rescue – Success of a rescue operation depends on the rescuer's ability to distinguish between the hostages and the hostage taker(s). Cooperation of the hostages is critical. Avoid being misconstrued as the criminal by avoiding threatening posture. Do not grab and hold on to any weapons, and make sure the rescuers can see your empty hands. Once the police arrive, obey all commands. This may involve your being handcuffed or made to put your hands up in the air. This is done for safety reasons, and once circumstances are evaluated by the police, they will give you further directions to follow. If you are not sure what to do, drop to the ground and stay low until instructed to do otherwise.

Escape – Escape is a risky resolution. If an opportunity presents itself, and the risk of staying is greater than the risk of going, you should take the risk and escape. Recognize that you are betting with your life. If at any time your intruder develops into an active shooter or killer, refer back to the Phase One instructions to Get Out or Take Out.

Active Shooter

EMERGENCY ACTION

Protect Yourself and Warn Others (Create and Manage Distance and Shielding from Threats)

Plan for Your Survival – Reasonable Options Can Include:

R.S.V.P. = Run – Shelter & Shield – Vigorously Fight – Play

Run - Run from the threat if you think you can do so safely.
Run at angles from the shooter and put cover or obstacles between you and the danger.

Shelter & Shield - Shelter or Shield yourself from the threat if you think that running might place you in more danger. Lock yourself in a defensible space and call for help.

Vigorously Fight - Fight an attacker if you think that greater harm will come to you if you do not fight.
If You Fight – You Must Be: Valiant – Vicious – Victorious
If You Fight – Verbalize: Stop! - Drop the Weapon! - Down on the Ground!

Play - Play incapacitated.
Play whatever you think if you think it might help your chances of survival.

Call 911 for Help – Report to Police as soon as you are out of immediate danger
Give Your Name – Telephone Number – Location.
Describe the Nature of the Incident and its Location.
Describe Any Injuries – Weapons – Hazards – Devices.
Describe the People Involved – Where They Are – Where They Went.

Stay on the line with the Dispatcher until help arrives.
Keep the Dispatcher updated on any changes so responding units can be updated.
Even if you cannot communicate, keep the line open.
The Dispatcher may be able to learn more about what is happening.

Evacuate or Shelter - Escape If You Can and Avoid the Danger
Move Out of Public Areas into an Office or Classroom - If You Cannot Escape
Assemble / Account For Those You Are Responsible For
Close and Lock the Doors and Windows
Barricade the Door – If the Door Will Not Lock
Obstruct Sight Lines Into the Secured Area
Lights and A/V Off – Get Down – Take Cover – Away From Doors and Windows
Avoid Fields of Fire – Be Quiet – Pretend No One is Home – Do Not Answer or Open the Door
Wait for Police to Help You Out of the Building

What To Do When Police Arrive
Police Priority is to Contact and Stop the Threat
!!! DANGER !!! DANGER !!!
Do Not Pose a Threat - Show and Empty Your Hands - Get Down On The Ground - Follow the Orders of the Police

More information about Active Shooter: What You Can Do is available from FEMA and DHS at:

http://training.fema.gov/EMIWeb/IS/IS907.asp

http://www.dhs.gov/video/options-consideration-active-shooter-preparedness-video

HOW TO RESPOND

WHEN AN ACTIVE SHOOTER IS IN YOUR VICINITY

1. Evacuate

- Have an escape route and plan in mind
- Leave your belongings behind
- Keep your hands visible

2. Hide Out

- Hide in an area out of the active shooter's view
- Block entry to your hiding place and lock the doors
- Silence your cell phone and/or pager

3. Take Action

- As a last resort and only when your life is in imminent danger
- Attempt to incapacitate the active shooter
- Act with physical aggression and throw items at the active shooter

CALL 911 WHEN IT IS SAFE TO DO SO

HOW TO RESPOND

WHEN LAW ENFORCEMENT ARRIVES

- Remain calm and follow officers' instructions
- Put down any items in your hands (i.e., bags, jackets)
- Immediately raise hands and spread fingers
- Keep hands visible at all times
- Avoid quick movements toward officers such as attempting to hold on to them for safety
- Avoid pointing, screaming or yelling
- Do not stop to ask officers for help or direction when evacuating

INFORMATION

YOU SHOULD PROVIDE TO LAW ENFORCEMENT OR 911 OPERATOR

- Location of the active shooter
- Number of shooters
- Physical description of shooters
- Number and type of weapons held by shooters
- Number of potential victims at the location

COPING

WITH AN ACTIVE SHOOTER SITUATION

- Be aware of your environment and any possible dangers
- Take note of the two nearest exits in any facility you visit
- If you are in an office, stay there and secure the door
- Attempt to take the active shooter down as a last resort

PROFILE

OF AN ACTIVE SHOOTER

An active shooter is an individual actively engaged in killing or attempting to kill people in a confined and populated area, typically through the use of firearms.

CHARACTERISTICS

OF AN ACTIVE SHOOTER SITUATION

- Victims are selected at random
- The event is unpredictable and evolves quickly
- Law enforcement is usually required to end an active shooter situation

More information about Active Shooter: What You Can Do is available from FEMA and DHS at:
http://training.fema.gov/EMIWeb/IS/IS907.asp
http://www.dhs.gov/video/options-consideration-active-shooter-preparedness-video

CALL 911 WHEN IT IS SAFE TO DO SO

U.S. DEPARTMENT OF HOMELAND SECURITY

Hostile Intruder | Active Violence | Active Shooter:
Information Available from EKU Emergency Management

http://www.emergency.eku.edu/emergency-action-quick-reference-and-sheltering-place
http://www.emergency.eku.edu/hostile-intruder-active-violence-active-shooter

Options for Consideration from the U.S. Department of Homeland Security:

http://www.dhs.gov/video/options-consideration-active-shooter-preparedness-video
https://training.fema.gov/EMIWeb/IS/courseOverview.aspx?code=IS-907

Armed Intruder | Actual or Potential Violence:

In a dangerous, or potentially dangerous, situation, you must quickly determine the most reasonable way to protect your own life. You should seek a safe environment, without endangering others, through evacuation or sheltering.

The concept of seeking shelter is to provide protection from an outside atmosphere or condition that may be immediately dangerous to life, health, or safety.

Shelter In Place | From an Armed Intruder | Secure In Place

Protective Action Recommendations:

- If a person enters your building with a weapon, immediately evacuate the building.
- If a person is seen outdoors with a weapon, seek shelter in the nearest unsecured building or leave the area.
- Warn other people in the area, provide assistance as you are able, and try to remain calm.
- Protect yourself. Hide out, by seeking shelter, and taking cover, in a secure place within a building.
- Generally speaking, and outside of the Pre-K or K-12 environment, unless you can do so quickly and easily, without exposing yourself to the danger, do not worry about locking the perimeter doors of your building. Consider that other innocents might try to seek refuge inside of your building as well. You should look for small, interior, securable, spaces to hide out in.
- If you are away from the area involved, stay away.
- Call 911, when it is safe to do so, if you need help or if you have information relevant to the incident.

Good practices for coping with a potentially dangerous intruder:

- Be aware of your environment and any possible dangers.
- Take note of the two nearest exits in any facility you visit.
- If you are in an office, stay there, and secure the door.
- If you are in a hallway, get into a room, and secure the door.
- If you cannot get into an office or a room, you should try to escape or improvise another hiding place.

Active Shooter is a phrase coined by law enforcement that describes an armed person who has used deadly physical force on persons and continues to do so while having unrestricted access to additional victims. The attack may be brief and intense and it may continue until the murderer is confronted with deadly physical force or the threat thereof. The school shooting at Columbine, and similar incidents, have caused a shift in law enforcement training and tactics. Instead of being taught to wait for a specialized team to arrive, officers train on how to take immediate action and rapid deployment during incidents that clearly involve suspects' use of deadly force.

Guidance to Faculty, Staff and Students
Active shooter situations are dynamic and progress rapidly. It bears some forethought as to what you might do if you are confronted with in-progress violence. Any action you take in any given circumstance will involve risk. No one can tell you, in the here and now, that there is one action that you can take that will guarantee your safety. We, all of us, must try to manage our risks and consider what is reasonable in any given situation.

Once notified of an active shooter incident, University Police will be the first emergency responders on the scene. Other law enforcement officers and emergency responders (Fire/Rescue/HAZMAT/EMS) will follow and be deployed as needed. Police are trained to respond to an active shooting incident by proceeding to the origin of the violence through their present sense perception such as the sounds of gunfire, the screams of victims, information obtained from fleeing individuals and reports and information coming in to the Dispatch Center or Incident Command Post. The police will move quickly into and through the affected area until the shooter is located and stopped or is no longer a threat to life and safety. If you are wounded, or with someone who may be wounded, expect the officers to bypass you in their search as they must find the shooter and eliminate the threat.

To assist the officers, please remain as calm as you can and patient during this time to prevent any interference with police operations. If you know where the suspect is or have a description of the person, tell the police. Rescue teams will follow soon to aid you and others.

During an active shooter incident, the priorities of law enforcement officers change.

Normal Law Enforcement Priorities:
- Officer Safety
- Hostage/Public Safety
- Perpetrator Apprehension
- Perpetrator Safety

Active Shooter Law Enforcement Priorities:
- Neutralize Perpetrator
- Hostage/Public Safety
- Officer Safety
- Perpetrator Safety

The imperative is to stop the violence immediately.

The Theory of Operation:
- Enter the area.
- Move quickly to the sounds and the source of the violence.
- Search only when the source of the violence is or becomes unknown.
- Move past secured areas, victims and threats such as improvised explosive devices.
- Engage and neutralize the perpetrators.
- Search for, evacuate, and tend to the living, the ill, and the injured.
- Preserve the crime scene and holding area security for investigative purposes.

As described in the Hostile Intruder and Hostage Situation section, if things change from an intruder or hostage situation to an active killer situation, you have two basic options: Get Out or Take Out.

You may find yourself in a place where you become aware of an active shooter situation and the killer is not in your immediate vicinity. If this is the case, there are a few additional reasonable options to consider.

Generally speaking, criminals take the path of least resistance. You probably want to make it as difficult as possible for the perpetrator to get to you and to victimize you. There are several options that are reasonable although they may all be debated and they all involve risk. Overall, what you must consider is that you are planning for your own survival and not relying on others to save you. Emergency action during an active shooter incident includes protecting yourself first and warning others as time and circumstances permit.

A good general principle to remember is that time, distance, and shielding are important in protecting you from a threat. The farther away in time you get from when an event was supposed to have happened or did happen, the safer you tend to be. The farther away you get from the physical danger of an event, the safer you tend to be. The more shielding that you can place between you and the harmful event, the safer you tend to be. There are also the concepts of concealment, cover, and being a moving target. Concealment can hide you from a threat. If the shooter cannot see you, they will have a hard time hitting you. Cover can stop, deflect or impede the progress and minimize the damage caused from projectiles. A classic example of this concept is in police work. Getting down behind the door of a police cruiser can provide concealment from a perpetrator with a handgun but it will not stop a bullet. Getting down behind the engine block of a police cruiser however can provide cover and the engine would likely stop or slow down the bullet. Finally, if you are being targeted by an assailant, it is significantly harder for them to hit a moving target. A good tactic would be to move away from the perpetrator as fast as possible. Move at angles away from the shooter. Try to put objects or cover between you and the shooter, which may impede the progress of bullets, shrapnel and debris. Bear in mind though, that if you run away and topple bookshelves on the way out, others might be trying to run out after you and they will have to scramble out over top of what you pulled down. Do not run in a straight line away from a shooter which would cause you to be in their sights for a long period of time.

Run away from the shooter if you can, but if you cannot or if you think that running might place you in more danger, then shelter and shield yourself from the danger. Lock yourself down along with others in your immediate vicinity into a secured location and call for help. If you are a person in responsible charge of other people then you have some other things to consider, such as assembling and accounting for those for whom you are responsible. However, this should not be to the detriment of the majority of the individuals whose safety you are trying to guard. You must consider the good of the many over the good of the few or the one. In other words, what if you were a teacher responsible for 30 students and 25 students were in your classroom and 5 were somewhere else. Should you leave the 25 to search for the 5? Should you lock the 25 in a classroom and go hunt for the others? Should your students open the classroom for you when you return? How would they know it is really you asking to be let in? What if someone comes to the door saying that they are emergency response personnel and asking to be let in? The police will be able to properly identify themselves and open the door without you having to open it for them.

If you shelter you should quickly gather those around you and move swiftly from the open and public areas into an office or classroom. Close the doors and windows and lock them. If the doors and windows will not lock, then barricade them. Move heavy objects like desks and bookshelves in front of them so that they obstruct the entrances and impeded sight lines and the aim of shooters. Close the blinds or otherwise obstruct the view of the perpetrator looking in through windows and doors. Turn off the lights and any audio video equipment, get down and stay low. Get under or behind some sturdy furniture if possible. Move away from the doors and windows so that you are not in the direct line of sight of a shooter and out of the path of projectiles and debris. Be quiet and pretend that no one is home. Do not answer or open the door. Wait for police officers to help you out of the area.

If you are caught in the open and you cannot run and cannot shelter, you may try to hide from the attacker. Make sure it is a well hidden space or you may be found as the intruder moves through the area looking for more victims. If you hide, take into consideration the area in which you are hiding. Will you be found there? Is it really a good spot to remain hidden? Hiding is akin to playing incapacitated and your survival is left to chance.

If you are confronted by an active shooter, if you are in imminent danger of death or severe physical injury, and if the options of running or sheltering and shielding have failed, then your viable options become fight or play incapacitated. As described above under the option of Take Out: Disarm and disable the intruder as quickly as possible with as much force as needed. Consider that if you are in public with other people on your side you probably outnumber the intruder(s). The decision to fight or play incapacitated is extremely risky. If you fight, you must be valiant, vicious, and victorious and you must know that you will probably be hurt, injured, disabled, or killed. You might however prevent a greater harm from coming to you or others by putting up a good fight. If you do not fight, you might be spared. You could play incapacitated if other victims are around you and the intruder might pass you by. Unhindered, though, an intruder has an opportunity to inflict multiple wounds, regroup, reload, and generally have his or her way until they are confronted with deadly force. If you are caught by the intruder and you are not going to fight back, do not look the intruder in the eyes, and obey all commands. Do not appear to pose a challenge and be submissive.

Eventually the police will come for you. As stated earlier, their first priority is to engage and neutralize the perpetrators. When officers arrive, things will be very tense. Avoid being mistaken as a possible intruder by avoiding threatening posture. Do not grab and hold on to any weapons, and make sure the rescuers can see your empty hands. Obey all commands given by the police. This may involve your being handcuffed or made to put your hands up in the air. This is done for safety purposes, and once circumstances are evaluated, they will give you further directions to follow. If you are not sure what to do, drop to the ground, stay low, and keep your empty hands visible until instructed to do otherwise.

* This Guideline was adapted from Surviving a Hostage Situation by Andrew Taylor with information compiled from three sources a teleconference hosted by the University Risk and Insurance Managers' Association, the Safe Travel Institute, and the National Hostage Survival Training Center. http://www.ihl.state.ms.us/rm/downloads/survivng_hostage_situation.pdf
As well as information from the Police Officers Safety Association - Active Shooter and 4th/5th Generation Warfare Presentation and the EKU Police Department Crime Prevention and Workplace Violence Presentation

EKU Faculty/Staff 911 Guide – Helping Students In Difficulty

Psychological Crisis

A psychological crisis exists when an individual is threatening harm to themselves, or is agitated and disruptive.

Psychological Crisis

EMERGENCY ACTION

Call 911 (If the Situation Becomes Violent or Life Threatening)

EKU Counseling Center (Students)
859-622-1303

Human Resources (Employees)
859-622-5094

Crisis Centers (See Below) (Anyone) (Anytime)

If a psychological crisis occurs:

- **Students: Contact**
  EKU Counseling Center
  521 Lancaster Avenue
  571 Whitlock Building
  Richmond, KY 40475
  859-622-1303
  http://www.counseling.eku.edu/

Regarding Student Behavior
Contact
EKU's Campus Threat Assessment &
Student Assistance and Intervention Team
(SAIT)
http://sait.eku.edu/

- **Faculty and Staff: Contact**
  EKU Human Resources
  521 Lancaster Avenue
  Jones 203 Coates Box 24A
  Richmond, KY 40475
  Phone: (859) 622-5094
  Fax: (859) 622-6667
  http://hr.eku.edu/

- **After Hours, contact University Police at 911.**

- **Any time, contact the following Crisis Center Hotlines**

Suicide Hotline	**1-800-SUICIDE** **(1-800-784-2433)**
Crisis Hotline:	**1-800-273-TALK** **(1-800-273-8255)**
Community Crisis Hotline:	**1-800-928-8000**
Bluegrass Rape Crisis Center:	**1-800-656-4673**
University Police:	**911** **1-859-622-1111** **1-859-622-2821**

- If an unusual or potentially dangerous situation occurs, remember the following:
  - Never try to handle a situation that you feel might be dangerous.
  - Call the Counseling Center, **Employee Assistance Program**, or the University Police for help.
  - Notify University Police at 911 and clearly state that you need immediate assistance.
  - Give your name, telephone number, location, and the nature of the problem.

EKU FACULTY/STAFF 911 GUIDE

A guide to using campus resources to handle student issues, concerns, and emergencies.

INSIDE THIS GUIDE

Emergency Contacts

You Are the First Contact

Discrimination/Harassment Concerns

Available Faculty/Staff Training

Student Code of Conduct

Filing a Report with Student Rights & Responsibilities

Confidentiality with FERPA

Supporting Students

Emergency Preparedness

Updating Employee Information on EKU Emergency Notifications

EMERGENCY PHONE NUMBERS

EMERGENCY	911
EKU Police (available 24/7)	622-1111
Counseling Center	622-1303
Dean of Students	622-1721
Military Veteran Affairs	622-2345
Services for Individuals with Disabilities	622-2933
Student Health Services	622-1761
Student Rights and Responsibilities	622-1500
University Housing	622-1515

Eastern Kentucky University is a community of shared academic values, foremost of which is a strong commitment to intellectual honesty, honorable conduct, and respect for others.

We acknowledge, as part of our mission, the importance to foster a safe environment that is built on trust, honesty, integrity, and mutual respect.

WHEN IN DOUBT, CALL 622-1111

EKUPD is your first point of contact with any student concern 24/7

FAMILIARIZE YOURSELF WITH
emergency.eku.edu/emergency-notifications
Know the procedures for campus emergencies

PRODUCED BY STUDENT RIGHTS & RESPONSIBILITIES / The Division of Student Success

YOU ARE THE FIRST CONTACT

FRONT LINE STAFF, PROFESSORS, TEACHING ASSISTANTS, ETC.

Aggression

Aggressive emotional behavior requiring assistance and/or after hours help

EKU POLICE

If a student is exhibiting aggressive behavior, or you perceive a threat of violence or other unlawful behavior call EKU PD immediately.

EKU PD patrol officers and dispatchers are on duty 24 hours a day, 7 days a week.

In case of EMERGENCY, call 911.

EKU PD is located in Mattox Hall and on the web at police.eku.edu

622-1111

Illness

Students who exhibit symptoms of illnesses that prevent them from participating in class

STUDENT HEALTH CTR

If a student is injured, behaving erratically, or exhibiting symptoms of an illness that prevents him/her from participating in class:

Contact EKU PD at 622-1111 or call 911 if the condition is serious or after hours.

Or send the student to Student Health Services if the situation is less serious.

SHS is located in the Rowlett Bldg., room 103 and on the web at healthservices.eku.edu

Office Hours:
Mon – Th: 8 a.m. – 5 p.m.
Friday: 8 a.m. – 4:30 p.m.

622-1761

Emotional Behavior

Aggressive emotional behavior requiring assistance and/or after hours help

COUNSELING CTR

When students express concerns related to depression, anxiety, sexual assault, alcohol or other drug problems, suicidal thinking, thoughts of harming others, or any other mental health concern, assistance can be provided by the Counseling Center. Individual, group and career counseling is available.

Also an eight-week career choice class (GCS 199) is available. Psychiatric services are offered as an adjunct to counseling when indicated. The Counseling Center also offers referral sources when the mental health need is beyond the scope of services.

The Counseling Center is located in Whitlock Building, Room 571 and on the web at counseling.eku.edu
After-hours emergencies, call EKU Police at 911 or 859-622-2821.

Office Hours:
Mon – Th: 8 a.m. – 5 p.m.
Fri: 8 a.m. – 4:30 p.m..

622-1303

Veteran/Military

Issues concerning student veterans, service members, or dependents

VETERAN AFFAIRS

The Office certifies members, veterans' and dependent education benefits, helps veterans obtain a copy of their military transcripts, provides tours to veteran affiliates, links veterans with campus resources, and can assist with educational, medical, disability benefit claims processing, community resources, and employment services (with the collaborative arrangement of the VA VetSuccess on Campus Counselor).

The Office is located at 317 Lancaster Avenue (Burnam House) and on the web at va.eku.edu

Office Hours:
Mon – Fri: 8 a.m. – 5 p.m.

622-2345

Additional Services

Concerns about troubled or troubling behavior

SAIT

The Student Assistance & Intervention Team's focus is on students whose behaviors may cause alarm or who seem threatening to themselves or to other members of the campus community. The SAIT has been developed as a tool for use by the EKU community in an effort to provide support and assistance to students who exhibit behavior that is: Unusual, potentially threatening in any way, troubling or concerning, disruptive to the University environment, threats made to harm self or others, causing discomfort to those around them, and alcohol/drug or other substance abuse.

Contact the Dean of Students Office at 859-622-1721 during regular office hours, or complete the SAIT reporting form available at www.sait.eku.edu

622-1721

Disability Concern

Concerns about the performance of a student who is receiving accommodations or concerns regarding the presence of a physical, learning, or cognitive disability

DISABILITY SERVICES

If a student is experiencing barriers or their ability to perform academically or communicate is negatively impacted by an accommodated or undocumented disability, contact the Office of Services for Individuals with Disabilities (OSID) about modifications and supports for which the student may be eligible.

The OSID serves students with visual and hearing loss, learning disabilities, AD/HD, Aspergers, acquired head injuries, psychological diagnoses, chronic illness, mobility impairments and temporary disabilities.

The OSID is located in the Whitlock Building 361. DHHS is in Case Annex 207. More information about OSID/DHHS is on the web at: disabilities.eku.edu/

Office Hours:
Mon – Fri: 8 a.m. – 5 p.m. or later by appointment.

622-2933

Interpersonal Violence

Concerns about possible sexual or dating violence involving a student

RESOURCES

If you suspect a student, female or male, has been a victim of a sexual assault, sexual harassment, or domestic/dating violence, direct the student to Green Dot@EKU. Please also report your concerns to the Title IX Coordinator, 622-2222.

If the situation is an emergency, call EKU Police at 622-1111.

Green Dot@EKU is located in Keith 129. Call 622-9999 or email with questions or information.

Office Hours:
Mon – Fri: 9 a.m. – 5 p.m.

622-9999

STUDENT CONDUCT & ACADEMIC INTEGRITY

DISCRIMINATION/ HARASSMENT

If a student approaches you about a discrimination or harassment concern, contact the Equal Opportunity Office for information and/or assistance.

622-8020

Visit http://equalop.eku.edu/ to find the designated harassment official in your college or department.

AVAILABLE TRAININGS

The Equal Opportunity Office and Title IX Coordinator and Deputy Coordinators provide specialized trainings for faculty, staff, and students on a variety of topics that deal with civil rights at EKU. The Equal Opportunity Office also provides mandatory on-line trainings through its website. For more information, visit equalop.eku.edu.

Green Dot@EKU provides training in bystander intervention and violence prevention strategies. Make an appointment for your class or group by emailing GreenDot@eku.edu or calling 622-9999.

ADDRESSING STUDENT CONDUCT

View the complete Student Code of Conduct online at studentrights.eku.edu

The Student Code of Conduct contains University regulations that describe prohibited behavior for students. If a student is causing a classroom disruption but does not appear to be a threat to him/herself or others, discuss the disruptive behavior with the student individually and file a written complaint with the Office of Student Rights and Responsibilities. Remember, you have the authority to ask a disruptive student to leave a classroom or office (temporarily).

CONFIDENTIALITY IN STUDENT CRISIS SITUATIONS

The Family Educational Rights and Privacy Act (FERPA) prohibits the University from releasing students' educational records to a third party, including a member of the student's family, without the student's prior written consent. Exceptions exist, such as health and safety emergencies and releasing to parents when they claim the student as a dependent on their tax return. In addition, EKU employees with a legitimate educational interest can access student records, and employees may release information to other employees who have a legitimate educational interest. Parents are encouraged to ask their students to create a WEB-4-Parent account so that interested students can have 24/7 access to student academic and financial records through EKUDirect. Inquiries about WEB-4-Parent can be made through the EKU Registrar's Office, 859-622-2320, or registration@eku.edu.

FILING A REPORT WITH THE OFFICE OF STUDENT RIGHTS AND RESPONSIBILITIES

Any member of the University community may file a complaint against any student for misconduct. Incidents of alleged violations of the Student Code of Conduct should be reported to the Office Student Rights and Responsibilities (Turley House #1). Any alleged violation should be submitted as soon as possible after the event takes place. Contact the Office of Student Rights and Responsibilities to discuss the process or for more information by calling **622-1500** or visit www.studentright.eku.edu.

PRODUCED BY STUDENT RIGHTS & RESPONSIBILITIES / The Division of Student Affairs

SUPPORTING STUDENTS

www.counseling.eku.edu

If you choose to approach a student you are concerned about or if a student reaches out to you for help with a personal problem, follow these guidelines to make the situation more comfortable for you and more helpful for the student:

TALK to the student in a face-to-face meeting when you both have the time and are not rushed or preoccupied. If you have initiated the contact, express your concern in behavioral, nonjudgmental terms.

LISTEN to thoughts and feelings in a sensitive, non-threatening way. Communicate understanding by repeating back key points the student shared.

GIVE HOPE that things can get better. It is important to encourage them to realize there are options. Suggest resources and enable them to consult a professional. Do not try to solve the student's problem.

AVOID judging, evaluating or criticizing even if the student asks for your opinion. Such behavior will push the student away. It is important to respect the student's value system even if you do not agree with it.

MAINTAIN clear and consistent boundaries and expectations. Maintain the professional nature of a relationship with your student and help him/her understand available options.

REFER the student to the appropriate professional. Help them understand that help is available and seeking help is a sign of strength. Let the student know what they should expect and what options are available.

TIME of day is important. Know what help is available when. The Counseling Center is open for appointments or crisis intervention Monday-Thursday from 8 am to 5 pm and Fridays from 8 am until 4:30 pm. For emergencies, help is available after hours by calling EKU PD at 622-1111.

FOLLOW UP with the student after your initial meeting. Find out if they were able to obtain appropriate help, and show your commitment to assisting them.

CONSULT the Counseling Center if you are ever in doubt about advising or intervention. View the Decision-Making Tree at counseling.eku.edu for more information or call 622-1303. For emergencies, help is available after hours by calling EKU PD at 622-1111.

EMERGENCY PREPAREDNESS

EKU Emergency Management supports the campus community by implementing programs in emergency planning and training to build, sustain and improve the capacity of the University to mitigate against, prepare for, respond to, and recover from emergency incidents.

Visit **http://emergency.eku.edu** to find useful information regarding:

- Severe Weather
- Fire or Fire Alarms
- Medical Emergencies
- Bomb Threats
- Hostile Intruders
- A variety of other emergencies

You can also download and print the EKU Emergency Guide.

UPDATE YOUR CONTACT INFORMATION FOR EKU EMERGENCY NOTIFICATIONS

1. Login to **EKU Direct**.
2. Select **"Rave Mobile Safety – Emergency Notifications"**.
3. Your EKU email address is already in the system. You can add up to 3 mobile numbers for text and/or voice messaging, and add up to two more email addresses.
4. All EKU issued PC's have the Alertus network messaging program installed.
5. For more information visit **http://emergency.eku.edu/emergency-notifications**

Note: Email addresses are automatically sent to all current EKU email addresses and you cannot opt-out of receiving messages on your EKU email account.

PRODUCED BY STUDENT RIGHTS & RESPONSIBILITIES / The Division of Student Success
This folder was designed by the University of Alabama and is used with their permission.
Revised 2014

Bomb Threats

Bomb Threat

EMERGENCY ACTION

Record the Exact Wording of the Threat and the Date and Time Received.

(From) Phone Number the Bomb Threat Came From.

(To) Phone Number the Threat was Received On.

Keep the caller on the line and use another phone to **Call 911.**

Ask – Question – Obtain – Preserve – Information:

If You Receive a Verbal Bomb Threat – Ask About It

When is the bomb going to explode?

Where is it right now?

What does it look like?

What kind of bomb is it?

What will cause it to explode?

Did you place the bomb?

Why?

Where are you calling from?

What is your name?

What is your address?

Make note of as many details about the conversation as you can.

Details help with investigations.

If You Receive a Written or Text Bomb Threat – Preserve It
Secure the media that the threat was made with.

Report to Emergency Responders:
Police/Fire/Rescue/HAZMAT/EMS
Call 911from a Campus or Public Telephone.
[Dial **911** from your cell phone (Off Campus) and
Dial **859-622-1111** or **859-622-2821** from your cell phone (On Campus)].
Do not use cell phones or radios in close proximity to any suspicious device or package.

Provide the Threat Information to Law Enforcement Officials.

Protect Yourself. Create and Manage Distance and Shielding from Threats.
Generally, the farther you move away from a threat, and the more solid and stable objects that you position between you and a threat, the safer you are from that threat.

Watch for and report what is strange, unusual or out of place.

There could be primary or secondary explosive devices along your exit path.

All bomb threats must be treated as a serious matter. To ensure the safety of the faculty, staff, students, and the general public, bomb threats must be considered real until proven otherwise. In most cases, bomb threats are meant to disrupt normal activities. Building evacuation is probably the safest action to take however that decision should be made in consultation with University Police Officials. The procedures described below should be implemented regardless of whether the bomb threat appears real or not.

If you receive a telephoned bomb threat, you should do the following:

- Record the exact wording of the threat and the date and time it was received.
- Record the phone number that the threat came from.
- Record the phone number that received the threat.
- Get as much information from the caller as possible. Try to ask the following questions:
    - When is the bomb going to explode?
    - Where is it right now?
    - What does it look like?
    - What kind of bomb is it?
    - What will cause it to explode?
    - Did you place the bomb?
    - Why?
    - Where are you calling from?
    - What is your name?
    - What is your address?
    - Record the exact wording of the threat and the date and time it was received?
- Keep the caller on the line and record everything that is said.
- Notify the police and building management using a different phone.
- Make note of as many details about the conversation as you can.
- These details or clues can greatly assist Law Enforcement Officials during their investigation.
    - Describe the caller's voice, language, and background.
    - Are there any distinguishing characteristics about the caller?
    - Male – Female – Unknown
    - Young – Middle Aged – Old
    - Distinct or Familiar (Who did it sound like?)
    - Soft – Low – Slow – Normal – Fast – High – Loud
    - Calm – Nervous – Laughing – Crying – Excited – Angry
    - Rough – Slang – Foul – Incoherent – Well Spoken – Refined – Accent
    - Impaired Speech – Slurred – Stuttered – Lisp – Disguised
    - Whispered – Cracking Voice – Clearing Throat – Deep Breathing
    - Message Read by Threat Maker – Taped
    - Background Noises
- Protect yourself by creating and managing distance and shielding from the threat.
- Evacuate if an evacuation alarm sounds and follow established building evacuation procedures.
- Watch for and report what is strange, unusual or out of place.
- There could be primary or secondary explosive devices along your exit path.

Suspicious Packages or Objects

Suspicious Packages or Objects

EMERGENCY ACTION

Stop. Don't handle.
If you must handle it, handle with care.
Don't shake or bump.

Isolate it immediately and shield yourself from the object.

Don't Open, touch, taste or smell.

Evacuate the area immediately.
Stay together in a safe place.
Shut down HVAC systems as you leave.
Watch for and report what is strange, unusual or out of place.
There could be primary or secondary explosive devices along your exit path.

Report to Emergency Responders:
Police/Fire/Rescue/HAZMAT/EMS
Call 911from a Campus or Public Telephone.
[Dial **911** from your cell phone (Off Campus) and
Dial **859-622-1111** or **859-622-2821** from your cell phone (On Campus)].
Do not use cell phones or radios in close proximity to any suspicious device or package.

Decontaminate yourself.
Wash with soap and water.

Be wary of suspicious packages and letters. They can contain explosives, chemical or biological agents.
Be particularly cautious at your place of employment.
(See the Suspicious Mail or Packages poster for illustration (http://www.usps.com/postalinspectors/pos84.pdf)

Some typical characteristics postal inspectors have detected over the years, which ought to trigger suspicion, include parcels that:

- Are unexpected or from someone unfamiliar to you.
- Have no return address, or have one that can't be verified as legitimate.
- Have protruding wires or aluminum foil, strange odors, or stains.
- Show a city or state in the postmark that doesn't match the return address.
- Are of unusual weight given their size, or are lopsided or oddly shaped.
- Are marked with threatening language.
- Have inappropriate or unusual labeling.
- Have excessive postage or packaging material, such as masking tape and string.
- Have misspellings of common words.
- Are addressed to someone no longer with your organization or are otherwise outdated.
- Have incorrect titles or titles without a name.
- Are not addressed to a specific person.
- Have hand-written or poorly typed addresses.

With suspicious envelopes and packages other than those that might contain explosives, take these additional steps against possible biological and chemical agents.

- Refrain from eating or drinking in a designated mail handling area.
- Place suspicious envelopes or packages in a plastic bag or some other type of container to prevent leakage of contents. Never sniff or smell suspect mail.
- If you do not have a container, then cover the envelope or package with anything available (e.g., clothing, paper, trash can, etc.) and do not remove the cover.
- Leave the room and close the door, or section off the area to prevent others from entering.
- Wash your hands with soap and water to prevent spreading any powder to your face.
- If you are at work, report the incident to an available supervisor and notify University Police without delay.
- List all people who were in the room or area when this suspicious letter or package was recognized. Give a copy of this list to both the local public health authorities and law enforcement officials for follow-up investigations and advice.
- If you are at home, report the incident to your local police department.

SUSPICIOUS MAIL OR PACKAGES

Protect yourself, your business, and your mailroom

If you receive a suspicious letter or package:

- Stop. Don't handle.
- Isolate it immediately.
- Don't open, smell, or taste.
- Activate your emergency plan. Notify a supervisor.

If you suspect the mail or package contains a bomb (explosive), or radiological, biological, or chemical threat:

- Isolate area immediately
- **Call 911**
- Wash your hands with soap and water

UNITED STATES POSTAL SERVICE

http://www.usps.com/postalinspectors/pos84.pdf

Explosion

Explosion

EMERGENCY ACTION

Take Cover and protect your head, neck and torso.

Leave Quickly as soon as you can.
Don't use elevators and watch for weakened floors and stairways.
Watch for falling debris.
Watch for and report what is strange, unusual or out of place.
There could be secondary explosive devices.

Move Away from the building and **Stand Clear** of the area.

Call 911if Emergency Responders are not already on scene.

If You are Trapped in Debris:

Signal your location.

Use a flashlight. Tap on a pipe or wall. Use a whistle. Shout only as a last resort.

Avoid unnecessary movement and cover your nose and mouth to filter your breathing.

If there is an explosion, you should:

- Get under a sturdy table or desk if things are falling around you. When they stop falling, leave quickly, watching for obviously weakened floors and stairways. As you exit from the building, be especially watchful of falling debris.
- Leave the building as quickly as possible. Do not stop to retrieve personal possessions or make phone calls.
- Do not use elevators.
- Watch for and report what is strange, unusual or out of place.
- There could be secondary explosive devices.

Once you are out:

- Do not stand in front of windows, glass doors, or other potentially hazardous areas.
- Move away from sidewalks or streets to be used by emergency responders or others still exiting the building.

If you are trapped in debris:

- If possible, use a flashlight to signal your location to rescuers.
- Avoid unnecessary movement so you don't kick up dust.
- Cover your nose and mouth with anything you have on hand.
  (Dense-weave cotton material can act as a good filter. Try to breathe through the material.)
- Tap on a pipe or wall so rescuers can hear where you are.
- If possible, use a whistle to signal rescuers.
- Shout only as a last resort. Shouting can cause a person to inhale dangerous amounts of dust.

HAZMAT – Hazardous Material Release or Spill

EMERGENCY ACTION

- **Evacuate** the release or spill area
- **Secure** the location
- **Isolate** exposed individuals for:
  - **Decontamination**
  - **Evaluation**
  - **Treatment**
- **Call EKU Public Safety at 911 or 859-622-1111 or 859-622-2421**
  - National Response Center (NRC): 800-424-8802
  http://hq.**msds**online.com/eku/Search/ListProducts.aspx?new=true&PageNumber=1&Sort=1&SortDirection=asc
- **Shut Down Relevant Utilities and HVAC** Systems and Vents
- Clean up only under the direction and control of EKU Environmental Health & Safety, Richmond Fire/Rescue Department and/or the Chemical Safety Officer.

Hazardous materials are substances that are flammable, combustible, explosive, toxic, noxious, corrosive, oxidizing, an irritant or radioactive. A hazardous material release or spill can pose a risk to life, health or property. An incident can result in the evacuation of a few people, a section of a facility or an entire neighborhood.

In addition to on-site hazards, you should be aware of the potential for an off-site incident effecting your operations. You should also be aware of hazardous materials used in facility processes and in the construction of the physical plant. Detailed definitions as well as lists of hazardous materials can be obtained from the Environmental Protection Agency (EPA) and the Occupational Safety and Health Administration (OSHA).

To help protect yourself, you must identify and label all hazardous materials stored, handled, produced and/or disposed of in your area. You must follow government regulations that apply to your facility. And you must obtain and have access to Material Safety Data Sheets (MSDS) for all hazardous materials at your location. If you have questions or concerns regarding hazardous materials, you should contact EKU Environmental Health and Safety at 859-622-2421 or 859-622-1111.

For releases, spills or incidents requiring special training, procedures, equipment (PPE) that is beyond the abilities of present personnel, take the following steps:

- Immediately notify involved personnel and evacuate the release or spill area.
- Isolate and or control that area. Secure the location.
- Pull the fire alarm if building evacuation is desired.
- Call 911 to report the incident.
- Give the operator the following information:
  - Your name, telephone number, and location.
  - Time and type of incident.
  - Name and quantity of the material, if known.
  - Extent of injuries or damage, if any.
- The key person on site should evacuate the involved area at once and seal it off to prevent further contamination of others until the arrival of emergency responders.
- HVAC (Heating, Ventilating, and Air-Conditioning) systems should be shut down.
- Anyone who is contaminated by the release or spill should avoid contact with others as much as possible; remain in the vicinity, and give his/her name to the emergency responders. Washing off contamination and any required first aid should be started immediately.
- No effort to contain or clean up spills and or releases should be made unless you have been trained.
- Take appropriate steps to make sure no one evacuates through the contaminated area.
- If an alarm sounds, follow established building evacuation procedures.
- An Incident Command Post may be established near the emergency site. Keep clear of the command post unless you have official business.
- Do not re-enter the area until directed by emergency responders.

Off-Campus Chemical Release or Spill (Examples: Highway / Railway / Industrial / Blue Grass Army Depot)

EMERGENCY ACTION

Protective Action Decisions (PADs) Issued by the Madison County Emergency Management Agency (EMA)

- **Eastern Kentucky University is primarily located in Zone 2E and Zone 2D**

  EMA issues PADs that may include:
  - **Shelter-In-Place (SIP) (Until the Immediate Danger Passes)**
  - **Evacuation (If There Is Enough Time Before the Danger Arrives)**
  - **Relocation (When It Is Safe - After a Period of Sheltering-In-Place)**

http://www.madisoncountyema.net/

Protective Actions

- **Shelter-In-Place (Until the Immediate Danger Passes)**
  - If the Madison County Emergency Management Agency directs us to Shelter-In-Place:
  - Move immediately inside one of the following Buildings: (A.C.M.P.T.U.W.)
    - Alumni Coliseum
    - Combs Building
    - Model Gymnasium
    - Perkins Building
    - Thompson Hall (DOCJT/Bizzack Training Complex)
    - University Building (Part of the Crabbe Library Complex)
    - Whitlock Building
  - If you cannot get to one of these buildings follow these general guidelines:
    - Take visiting friends and/or fellow workers immediately indoors.
    - Close and lock all windows and doors. Locking creates a better seal.
    - Shut off heating / air-conditioning systems and fans that draw air from the outside.
    - Close vents.
    - If you have a fireplace, put out the fire and close the damper.
    - Go to the room you have chosen as your shelter. Bring your personal shelter kit, enough food and water for a few hours, your Tone Alert Radio, a portable AM/FM radio, and a flashlight into this room. We recommend that you keep both your Tone Alert Radio and Shelter In Place kit in your selected shelter.
    - Shut and seal the door to the rest of the building with plastic and duct tape. Put duct tape on electrical outlets and vents. Use duct tape and plastic to cover any windows.
    - Note: You will not run out of air in a shelter room. Sealing the room just slows the flow of air from the outside, protecting you longer from possible exposure.
  - Listen to one of the Local Emergency Alert System radio stations for further instructions.
    - Local Emergency Alert System Radio Stations:
      WCBR 1110 AM, WEKY 1340 AM, WIRV 1550 AM,
      WEKU 88.9 FM (EKU Campus Radio), WCYO 100.7 FM, WLFX 106.7 FM

- **Evacuation (If There Is Enough Time - Immediately Know Your Zone and Go)**
- **Relocation (After the Danger Passes - To Get Out of the Areas Involved in the Release)**
  - If the Madison County Emergency Management Agency directs us to immediately Evacuate, or to Relocate after a period of Sheltering-In-Place and the immediate danger has passed:
  - EKU faculty, staff, and students with personal transportation:
    - Immediately drive north on I-75 to Jacobson Park, or Other Location in Fayette Co as determined by Madison County EMA.
  - EKU faculty, staff, and students without personal transportation:
    - Immediately report to the front of Alumni Coliseum as the staging area for limited Shuttle Bus transportation to Jacobson Park, or Other Location in Fayette Co. This will take time because transportation resources will be stretched thin. Please follow the instructions of EKU Public Safety and the Madison County EMA.
  - Model faculty, staff, students, and after-school programs:
    - Follow Model's specific evacuation plan and take their assigned buses to Dunbar High School.
  - Burrier Child Development Center:
    - Follow the CDC specific plan and self relocate to Henry Clay High School.
  - Meadowbrook Farm faculty, staff, and students.
    - Follow the specific evacuation plan to Powell County High School.

Do Not Return to the Involved Zones until EMA Officials Advise that the Areas Are Safe.

Off-Campus Chemical Release or Spill (Examples: Highway / Railway / Industrial / Blue Grass Army Depot)

- Madison County Emergency Management Agency (EMA) and the City or County Fire Departments respond to, assess and control the incident.
- If needed, the Madison County EMA will activate the Madison County Emergency Sirens and the Tone Alert Radios to inform citizens of the protective action to take by the particular Zones involved.

- **Eastern Kentucky University is primarily located in Zones 2E and 2D:**
  - **The Zone for the Main Campus (Campus North of the Eastern Bypass) is Zone 2E.**
  - **The Zone for the South Campus (Campus South of the Eastern Bypass) is Zone 2D.**
- The Madison County EMA will contact the EKU Police Department to order the appropriate protective action to be taken once the event has been assessed. That action could include the campus community **Sheltering-In-Place**, immediately **Evacuating**, or **Relocating** after the immediate danger passes and citizens are advised that they should come out of Shelter-In-Place.
- The Madison County EMA will advise evacuees if and when they may return to EKU.

Madison County Emergency Management Agency
560 S. Keeneland Drive
Richmond, KY 40475
859-624-4787
http://www.madisoncountyema.net/

ENHANCED SHELTER IN PLACE (ESIP) – SYSTEM OPERATING INSTRUCTIONS

(Excerpted from the Operations & Maintenance Manual)
(Enhanced Shelter In Place)
(See Manual for full operations and maintenance information)

Alumni Coliseum, Combs Building, Model Gymnasium, Perkins Building, Thompson Hall, University Building, and Whitlock Building are equipped with Collective Protection Systems (CPS).

These buildings have been modified to provide Enhanced Shelter In Place (ESIP) protection for personnel in the event of a hazardous chemical release at the nearby Blue Grass Army Depot. The ESIP protection system consists of permanent architectural sealing measures, modifications to the HVAC systems, and installation of an ESIP control panel (See Panel Locations page for Panel Locations).

The Major System Components:

- **Control Panel**
- **Dampers**
- **Perimeter Doors**
- **HVAC System**

- Activation of the control panel will: shut down the heating, ventilation, and air-conditioning system and close designated mechanical isolation dampers. Closure of the exterior perimeter doors and windows will seal the protected area, reduce outside air infiltration, and provide a level of protection for the personnel inside until the hazardous release has been cleared.

- Emergency Switch – The emergency switch is a red button located on the front lower right hand side of the control panel. Pushing the emergency switch will start the ESIP system into operation. Once the system is in operation, pushing the emergency switch again will deactivate the ESIP system.

- **INSTRUCTIONS FOR SYSTEM START UP**

- Move all personnel into the protected area when notified that a hazardous event has occurred.

- Manually close and latch all perimeter doors.

- Verify that all exterior windows in the protected area are closed and latched.

- Start the ESIP protection system by pushing the red start button on the face of the control panel.

- Check to insure that all green pilot lights on the face of the control panel are illuminated.

- The ESIP system is operating properly if all control panel pilot lights are illuminated.

- Proceed to the troubleshooting section of the manual if any of the control panel pilot lights fail to illuminate.

- Keep all doors and windows closed and remain in the protected area until notified that the hazard has been cleared.

- **INSTRUCTIONS FOR SYSTEM SHUT DOWN**

- After being notified that the hazard has been cleared, stop the ESIP protection system by pushing the red start button again on the face of the control panel.

- All pilot lights on the face of the control panel should go off verifying that the system has shut down.

- Perimeter doors may now be opened and personnel should exit to the outside. Do not exit a protected area into an unprotected part of a building (a building or portion of a building where the HVAC system was not shut down). You may be directed to relocate out of the area affected by the hazardous material or chemical agent release.
- Do Not Return to the Involved Zones (2E and 2D) until EMA Officials Advise that the Areas Are Safe.

If you can read this sign, you are inside the Collective Protection System (CPS) Protected Area.

Below is a picture of an Enhanced Shelter In Place (ESIP) Control Panel.

Protective Action Decisions (PADs) Issued by the Madison County Emergency Management Agency (EMA)

- **Eastern Kentucky University is primarily located in Zone 2E and Zone 2D**

  EMA issues PADs that may include:

  - **Shelter-In-Place (SIP) (Until the Immediate Danger Passes)**
  - **Evacuation (If There Is Enough Time Before the Danger Arrives)**
  - **Relocation (When It Is Safe - After a Period of Sheltering-In-Place)**

Protective Actions

- **Shelter-In-Place (Until the Immediate Danger Passes)**

  - If the Madison County Emergency Management Agency directs us to Shelter-In-Place:
  - Move immediately inside one of the following Buildings: (A.C.M.P.T.U.W.)
    - Alumni Coliseum
    - Combs Classroom Building
    - Model Gymnasium
    - Perkins Building
    - Thompson Residence Hall (DOCJT/Bizzack Training Complex)
    - University Building
    - Whitlock Building

  - Listen to one of the Local Emergency Alert System radio stations for further instructions.
    - Local Emergency Alert System Radio Stations:
      WCBR 1110 AM, WEKY 1340 AM, WIRV 1550 AM,
      WEKU 88.9 FM (EKU Campus Radio), WCYO 100.7 FM, WLFX 106.7 FM

- Start the ESIP protection system by closing all perimeter doors and windows and pushing the red start button on the face of the control panel.

- After being notified that the hazard has been cleared, stop the ESIP protection system by pushing the red start button again on the face of the control panel.

- Perimeter doors may now be opened and personnel should exit to the outside. Do not exit a protected area into an unprotected part of a building (a building or portion of a building where the HVAC system was not shut down). You may be directed to relocate out of the area affected by the hazardous material or chemical agent release.

- **Evacuation (If There Is Enough Time - Immediately Know Your Zone and Go)**
- **Relocation (After the Danger Passes - To Get Out of the Areas Involved in the Release)**

  - If the Madison County Emergency Management Agency directs us to immediately Evacuate, or to Relocate after a period of Sheltering-In-Place and the immediate danger has passed:

  - EKU faculty, staff, and students with personal transportation:
    - Immediately drive north on I-75 to Jacobson Park, or Other Location in Fayette Co as determined by Madison County EMA.

  - EKU faculty, staff, and students without personal transportation:
    - Immediately report to the front of Alumni Coliseum as the staging area for limited Shuttle Bus transportation to Jacobson Park, or Other Location in Fayette Co. This will take time because transportation resources will be stretched thin. Please follow the instructions of EKU Public Safety and the Madison County EMA.

  - Model faculty, staff, students, and after-school programs:
    - Follow Model's specific evacuation plan and take their assigned buses to Dunbar High School.

  - Burrier Child Development Center:
    - Follow the CDC specific plan and self relocate to Henry Clay High School.

  - Meadowbrook Farm faculty, staff, and students:
    - Follow their specific evacuation plan to Powell County High School.
- Do Not Return to the Involved Zones (2E and 2D) until EMA Officials Advise that the Areas Are Safe.

Building	Panel Locations	Chemical Emergency Occupant Load (10 Sq. Ft. per Person)
Alumni Coliseum	Control Panel on the 2nd Floor Room 208	4955
Burrier CDC	Control Panel in the Basement G-14	208
Combs Classroom	Control Panel on the 1st Floor NE Closet	5672
Model Gymnasium	Control Panel on Lower Level Room 151	1340
Perkins Building	Control Panel on First Level Main Lobby	5536
Thompson Hall	Control Panel 1st Floor Laundry Room 107	2876
University Building	Control Panel on the 3rd Floor by 323A	1057
Whitlock Building	Control Panel on the 1st Floor Room 151	5181
Total		26825

Contact Information for the U.S. Army Corps of Engineers and the Contractor for the ESIP Training:

U.S. Army Corps - Brad Faulkenberg Bradley.j.faulkenberg@usace.army.mil
859-779-6152 (Office)
859-661-0333 (Cell)

Intersteel, Inc.
Blue Grass Army Depot
Building S-23
Project Manager - Curt Robertson curterobertson@hotmail.com
859-625-1232 (Office)
859-625-1842 (Fax)
859-229-8396 (Cell)

Eastern Kentucky University and the Chemical Stockpile Emergency Preparedness Program (CSEPP)

Eastern Kentucky University (EKU) Richmond Campus and Madison County facilities lie in several Zones (2E, 2D, 1C, and 3D). In order to maintain EKU continuity of operations, and to make a safe community response as fast as possible, we have extended the concept of an automatic, default, Protective Action Decision (PAD), used at Model Laboratory School and Burrier Child Development Center, of Sheltering In Place (SIP), to all EKU facilities in Madison County. On Richmond Campus (Zones 2E and 2D), individuals should go to an Enhanced Shelter In Place (ESIP) Building, without delay, and activate their Collective Protection Systems (CPS). At other locations, like Meadowbrook Farm (Zone 1C) and Central Kentucky Regional Airport (Zone 3D), individuals should Shelter In Place using SIP Kits. The prompt to Shelter In Place should be any mass notification made, about a community-wide hazardous materials incident, through the Advisor Alert Radios (Voice Message), the Outdoor Siren System (Alternating High/Low Wail), and/or the EKU Emergency Notification System Alert Methods. Updated information, such as exactly where a chemical plume is anticipated to go, what zones are truly affected, and when the plume is projected to arrive, will be disseminated when that information becomes available.

Primary Protective Action Decisions:

SHELTER IN PLACE Automatic Default PAD	**All EKU Facilities should Shelter In Place (regardless of what zones are affected) Richmond Campus ESIP Buildings: Alumni Coliseum, Combs Building, Model Gym, Perkins Building, Thompson Hall, University Building, and Whitlock Building Other locations should Shelter In Place using SIP Kits**
EVACUATE If Directed To	**EKU Madison County Facilities would Evacuate to their Pre-Determined Locations: 2E to Jacobson Park in Lexington Burrier to Henry Clay High School in Lexington Model to Dunbar High School in Lexington 2D to North Laurel High School in London 1C to Powell County High School in Stanton 3D to Garrard County Middle School in Lancaster**

Following Shelter In Place there are two likely secondary Protective Action Decisions;
(1) Exit Shelter In Place or (2) Relocate to a decontamination area or designated reception area.

If both Richmond Campus zones are actually affected, both zones will take the same secondary protective actions, if possible, and relocate to the same decontamination and/or relocation area. The pre-designated location for Zone 2E to relocate to is the Jacobson Park in Lexington. This is the most likely area for both zones to relocate to. (*Burrier and Model Schools have different evacuation/relocation locations specific to daycare and school populations*).

Although all campus facilities in all zones took the same initial protective actions, *it may be deemed necessary for facilities in different zones to take different secondary protective actions*. Personnel and students in one zone may not have truly been affected, and therefore may be told to exit Shelter In Place and stay where they are. Personnel and students in another zone, which may have been affected, may be given a more cautionary set of instructions, and be told to relocate to a specific location as determined by the Madison County Emergency Management Agency. For example, Zone 2E may be instructed to exit Shelter In Place and stay, while Zone 2D may be instructed to relocate to North Laurel High School along with other members of the populace in Zone 2D.

Possible Secondary Protective Action Decisions:

<table>
<tr><th>Sheltered In Place</th><th colspan="3">Possible Secondary Actions</th></tr>
<tr><td>Zone 2E</td><td>Exit and Stay</td><td rowspan="2">Both Zones Relocate to Jacobson Park, if possible, or Other Same Area As Directed</td><td>Exit and Relocate to Jacobson Park, or Other Location</td></tr>
<tr><td>Zone 2D</td><td>Exit and Stay</td><td>Exit and Relocate North Laurel HS</td></tr>
<tr><td>Burrier</td><td>Exit and Stay</td><td>Exit and Relocate to Henry Clay HS</td><td></td></tr>
<tr><td>Model</td><td>Exit and Stay</td><td>Exit and Relocate to Dunbar HS</td><td></td></tr>
<tr><td>Zone 1C</td><td>Exit and Stay</td><td>Exit and Relocate to Powell County HS</td><td></td></tr>
<tr><td>Zone 3D</td><td>Exit and Stay</td><td>Exit and Relocate to Garrard County MS</td><td></td></tr>
</table>

Note:

- EKU students, faculty, staff, and visitors travel freely between Zones 2E, 2D, 1C, and 3D.
- There are no physical barriers between the zones or facilities in Madison County.
- Road blocks may be set up to divert travelers away from affected zones.
- EKU's population, of about 19,000 individuals, occupy multiple zones.
- EKU's population fluctuates daily.
- Zone 2E contains the most heavily populated area of the EKU Richmond Campus.

EASTERN KENTUCKY UNIVERSITY

Collective Protection System (CPS) Operation Checklist

- ☐ Move everyone into the protected area when notified that a hazardous event has occurred.
- ☐ Start the ESIP/CPS system by pushing the red start button on the face of the control panel.
  Any individual may activate the system when needed.
  EKU Public Safety officials may not be in your ESIP building.
- ☐ Manually close, latch, and lock all perimeter windows.
- ☐ At the time the hazard is estimated to arrive in your zone (Zone 2E and/or 2D), do the following.
- ☐ Manually close, latch, and lock all perimeter doors.
- ☐ Double check that all perimeter doors are secure and post a
  Stop – Shelter-In-Place Protected sign at each entrance.
- ☐ Double check that all perimeter windows are secure.
- ☐ Keep all doors and windows closed.
- ☐ Remain in the protected area until notified that the hazard has cleared.
- ☐ After being notified that the hazard has cleared, do the following.
- ☐ Stop the ESIP/CPS system by pushing the red start button on the face of the control panel again.
  Any individual may deactivate the system when the all clear order is given.
  EKU Public Safety officials may not be in your ESIP building.
- ☐ Perimeter doors and windows may now be opened.
- ☐ Exit outside.
- ☐ Individuals may be directed to relocate out of the affected area.

THIS FACILITY IS SHELTER-IN-PLACE PROTECTED!!!

NO ONE CAN COME IN OR GO OUT OF THE BUILDING WHEN THIS SIGN IS POSTED

If we open this door, students, faculty, staff, and visitors will be at further risk. You should SHELTER-IN-PLACE and protect yourself at another location.
Do not call personnel in this building. Telephone lines should be kept open for emergency use.

Earthquake

Earthquake

EMERGENCY ACTION

Identify safe places indoors and out.

Under sturdy furniture like a heavy desk or table
Against an inside wall
Away from where glass could shatter around windows, mirrors, pictures,
or where heavy furniture could fall over
In the open, away from buildings, trees, telephone and electrical lines,
overpasses, and elevated expressways

- **Take Cover** and protect your head, neck and torso.
- **Remain Indoors** until the shaking has stopped and you are sure it is safe to exit.
- **Evacuate** if the alarm sounds or if told to do so by Emergency Responders.
- **Move Away** from buildings and other things that may collapse and fall.

Earthquakes occur most frequently west of the Rocky Mountains, although historically the most violent earthquakes have occurred in the central United States. Earthquakes occur suddenly and without warning.

Earthquakes can seriously damage buildings and their contents; disrupt gas, electric and telephone services; and trigger landslides, avalanches, flash floods, fires and huge ocean waves called tsunamis. Aftershocks can occur for weeks following an earthquake. In many buildings, the greatest danger to people in an earthquake is when equipment and non-structural elements such as ceilings, partitions, windows and lighting fixtures shake loose.

What to do During an Earthquake

Stay as safe as possible during an earthquake. Be aware that some earthquakes are actually foreshocks and a larger earthquake might occur. Stay indoors until the shaking has stopped and you are sure exiting is safe.

If Indoors

- DROP to the ground; take COVER by getting under a sturdy table or other piece of furniture; and HOLD ON until the shaking stops. If there isn't a table or desk near you, cover your face and head with your arms and crouch in an inside corner of the building.
- Stay away from glass, windows, outside doors and walls, and anything that could fall, such as lighting fixtures or furniture.
- Stay in bed if you are there when the earthquake strikes. Hold on and protect your head with a pillow, unless you are under a heavy light fixture that could fall. In that case, move to the nearest safe place.
- Use a doorway for shelter only if it is in close proximity to you and if you know it is a strongly supported, load bearing doorway.
- Stay inside until shaking stops and it is safe to go outside. Research has shown that most injuries occur when people inside buildings attempt to move to a different location inside the building or try to leave.
- Be aware that the electricity may go out or the sprinkler systems or fire alarms may turn on.
- DO NOT use the elevators.

If Outdoors

- Stay there.
- Move away from buildings, streetlights, utility wires, and other structures. CAUTION: Avoid downed power or utility lines as they may be energized. Do not attempt to enter buildings until you are advised to do so by the proper authorities.
- Once in the open, stay there until the shaking stops. The greatest danger exists directly outside buildings, at exits, and alongside exterior walls. Many of the 120 fatalities from the 1933 Long Beach earthquake occurred when people ran outside of buildings only to be killed by falling debris from collapsing walls. Ground movement during an earthquake is seldom the direct cause of death or injury. Most earthquake-related casualties result from collapsing walls, flying glass, and falling objects.

If in a Moving Vehicle

- Stop as quickly as safety permits and stay in the vehicle for the shelter it provides. Avoid stopping near or under buildings, trees, overpasses, and utility wires.
- Proceed cautiously once the earthquake has stopped. Avoid roads, bridges, or ramps that might have been damaged by the earthquake.

If Trapped Under Debris

- Do not light a match.
- Do not move about or kick up dust.
- Cover your mouth with a handkerchief or clothing.
- Tap on a pipe or wall so rescuers can locate you. Use a whistle if one is available. Shout only as a last resort. Shouting can cause you to inhale dangerous amounts of dust.

After the Initial Shock

- Be prepared for aftershocks. Aftershocks are usually less intense than the main quake, but can cause further structural damage.
- Protect yourself at all times.
- Evaluate the situation and call 911 for emergency assistance, if necessary.
- Do not use lanterns, torches, lighted cigarettes, or open flames, since gas leaks could be present.
- Open windows, etc., to ventilate the building. Watch out for broken glass.
- If a fire is caused by the earthquake, implement the FIRE PROCEDURES.
- Determine whether or not anyone has been caught in the elevators or was trapped by falling objects. If so, call 911. DO NOT USE THE TELEPHONE UNLESS IT IS ABSOLUTELY NECESSARY FOR EMERGENCIES. Heavy use of the telephone will tie up the lines and prevent emergency calls from going out.
- If the structural integrity appears to be deteriorating rapidly, evacuate the building.
- Damaged facilities should be reported to Facilities Services.
- If the evacuation alarm sounds, follow established building evacuation procedures.
- Should you become trapped in a building, DO NOT PANIC!
- If a window is available, place an article of clothing (shirt, coat, etc.) outside the window as a marker for rescue crews.
- If there is no window, tap on the wall at regular intervals to alert emergency crews of your location.
- Emergency Responders will check buildings immediately after a major quake.

Other Considerations

- Inspect your facility for any item that could fall, spill, break or move during an earthquake.
- Take steps to reduce these hazards:
    - Move large and heavy objects to lower shelves or to a platform on the floor.
    - Hang heavy items away from where people work.
    - Secure shelves, filing cabinets, tall furniture, desktop equipment, computers, printers, copiers and light fixtures.
    - Secure fixed equipment and heavy machinery to the floor.
    - Add bracing to suspended ceilings, if necessary.
    - Install safety glass where appropriate.
    - Secure large utility and process piping.
- Review processes for handling and storing hazardous materials.
- Have incompatible chemicals stored separately.
- Designate areas in the facility away from exterior walls and windows where occupants should gather after an earthquake if an evacuation is not necessary.
- Do not use the elevators.
- Use stairways to leave the building if it is determined that a building evacuation is necessary.

Civil Disturbances

EMERGENCY ACTION

Civil disturbances include riots, demonstrations, threatening individuals or assemblies that have become disruptive.

If you observe such disturbances:

- Call the police. Dial 911, use an Emergency Call Box, or Dial 859-622-1111 or 859-622-2821 from your cell phone if you are on campus.
- Provide the address, location, and any details available to the dispatcher.
- Do not provoke or become part of the disturbance.
- Secure your work area, log off computers and secure sensitive files, if safe to do so.
- Remain inside and away from doors and windows if the disturbance is outside.

If you are confronted by angry, belligerent, or violent individuals, use the following steps when communicating with them.

- Remain calm.
- Be courteous and confident.
- Allow the opportunity for the person to express their feelings and concerns.
- Listen respectfully and objectively.
- Alert the police immediately if a threat exists.
- Notify your supervisor and your department chair as soon as you are able.

Do Not:

- Corner or crowd the hostile individual.
- Attempt to touch the individual.
- Blame anyone.
- "Blow off" the hostile individual.

Sample defusing questions:
How can I help you? Tell me more about this issue. What are your concerns? What do you want to accomplish?

Further action may include:

- Keep at a safe distance.
- Move to a neutral location with more than one exit, if possible.
- Leave the door open and have another person join you.
- Alert counseling or advising staff who can help with the individual's concerns.

U.S. Constitution: First Amendment

Congress shall make no law respecting an establishment of religion, or prohibiting the free exercise thereof; or abridging the freedom of speech, or of the press; or the right of the people peaceably to assemble, and to petition the Government for a redress of grievances.

Most campus demonstrations such as marches, meetings, picketing, and rallies will be peaceful and non-obstructive. A student demonstration should not be disrupted unless one or more of the following conditions exists as a result of the demonstration:

- Physical harm or the threat of physical harm to persons, property, or facilities.
- Prevention of access to the facilities or functions of the University.
- Interference with the normal operations of the University.

Disturbance Type Specific Procedures

- Peaceful, Non-Obstructive Demonstrations
    - Generally, demonstrations of this kind should not be interrupted. Demonstrators should not be obstructed or provoked, and efforts should be made to conduct University business as normally as possible. Police should be called on standby in the event that the demonstration suddenly becomes violent.
    - If demonstrators are asked to leave but refuse to leave by regular facility closing time:
        - Arrangements may be made with the Chief of Police or their designee to monitor the situation during non-business hours: and/or
        - Determination will be made to treat the violation of regular closing hours as a disruptive demonstration.
- Non-Violent, Disruptive Demonstrations
    - In the event that a demonstration blocks access to University facilities or interferes with the operations of the University:
    - Demonstrators will be asked to terminate the disruptive activity by the President or their designee.
    - The Chief of Police or their designee will consider having a videographer available to document events.
    - Key University personnel and student leaders may be asked to go to the area to persuade the demonstrators to desist.
    - The demonstrators will be asked to discontinue the disruptive activities or disperse and leave the area.
    - If the demonstrators persist in the disruptive activity they will be apprised that failure to discontinue the specified action within a determined length of time may result in disciplinary action including suspension or expulsion and/or possible criminal charges.
    - Efforts should be made, using photographs and video, to secure positive identification of demonstrators in violation of rules and laws to facilitate later charges and testimony.
    - After consultation with the President, the appropriate Vice-President(s), and the Executive Director of Public Safety, or their designees, the determination of the need for intervention by government authorities will be made.
    - If determination is made to seek the intervention of government authorities, the demonstrators should be so informed. Upon arrival of the police, the demonstrators may be warned by police of the intention to make arrests.
- Violent, Disruptive Demonstrations
    - In the event that a violent demonstration occurs, and injury to persons or property happens or appears imminent, the police should be notified and they will take immediate and appropriate action to safeguard life and property. Such action may involve the use of physical force to disperse the demonstrators, make arrests, and protect themselves, the community in general, property, and facilities from harm.

Directive to terminate demonstration (sample language)

This assembly and the conduct of each participant are disrupting the operations of the University and are in violation of the rules and regulations of the University. Criminal violations may also result from your activities. You are being called upon to disperse and terminate this demonstration. You will be given the opportunity to discuss your concerns in a manner appropriate to the University Administration. In no event will the Administration accede to demands backed by force or the threat of force. Accordingly, you are directed to terminate this demonstration. If you have not done so within (a specified period of time), we will take whatever measures are reasonably necessary to restore order and safeguard life, property, and facilities. Any individual who continues to participate in this demonstration may be subject to administrative sanctions and/or arrest for criminal violations.

Directive to terminate demonstration with the assistance of the police (sample language)

You have previously been directed to terminate this demonstration and you have been placed on notice as to the consequences of your failure to do so. Since you have chosen to remain in violation of the rules and regulations of the University, each of you is hereby placed on interim suspension. The Police will now be called in to assist by dispersing this assembly. Those who fail to leave immediately will be subject to administrative sanctions and/or arrest (for such things as Criminal Trespass, Disorderly Conduct, Criminal Mischief, Riot, etc.).

Information about EKU Student Rights and Responsibilities can be found on the EKU Website at:
http://www.studentjudicial.eku.edu/student_rights.php

As citizens, students enjoy the same freedoms as are guaranteed by the Constitutions of the United States and the Commonwealth of Kentucky and have the same duties and responsibilities, as do other citizens.
Students are free to discuss, to express opinions, and to hear expression of diverse opinions.
Such expression of opinions and discussion must be accomplished without disrupting operations of the University.

Information regarding the Rights of Kentuckians and the Kentucky Revised Statutes can be found below:

Kentucky Constitution: Section 1
http://www.lrc.ky.gov/Legresou/Constitu/001.htm

Rights of life, liberty, worship, pursuit of safety and happiness, free speech, acquiring and protecting property, peaceable assembly, redress of grievances, bearing arms.

All men are, by nature, free and equal, and have certain inherent and inalienable rights, among which may be reckoned:

First: The right of enjoying and defending their lives and liberties.
Second: The right of worshipping Almighty God according to the dictates of their consciences.
Third: The right of seeking and pursuing their safety and happiness.
Fourth: The right of freely communicating their thoughts and opinions.
Fifth: The right of acquiring and protecting property.
Sixth: The right of assembling together in a peaceable manner for their common good, and of applying to those invested with the power of government for redress of grievances or other proper purposes, by petition, address or remonstrance.
Seventh: The right to bear arms in defense of themselves and of the State, subject to the power of the General Assembly to enact laws to prevent persons from carrying concealed weapons.

For information related to Kentucky Revised Statutes and the Kentucky Penal Code see the following chapters:
http://www.lrc.ky.gov/krs/titles.htm

Chapter 525 – Riot, Disorderly Conduct, and Related Offenses
http://www.lrc.ky.gov/KRS/525-00/CHAPTER.HTM

Chapter 508 – Assault and Related Offenses
http://www.lrc.ky.gov/KRS/508-00/CHAPTER.HTM

Chapter 512 – Criminal Damage to Property
http://www.lrc.ky.gov/KRS/512-00/CHAPTER.HTM

Take 3 Against Flu

1 – Vaccinate

A flu vaccine is the best way to protect against flu.
The flu vaccine protects against three different flu viruses.
Getting a vaccine is very important for people at high risk for serious flu complications and their close contacts.
People at high risk include infants, pregnant women, people with chronic health conditions like asthma, diabetes or heart disease, and people 65 and older.

2 – Stop Germs

Cover your cough. Cover your mouth and nose with a tissue when you cough or sneeze,
or cough or sneeze into your upper sleeve, not your hands.
Throw the tissue away after you use it.
Clean your hands often with soap and water, especially after you cough or sneeze.
If you are not near water, use an alcohol-based hand cleaner.
Stay away as much as you can from people who are sick.
If you get the flu, stay home from work or school.
If you are sick, do not go near other people so that you don't make them sick.
Try not to touch your eyes, nose, or mouth. Germs often spread this way.

3 – Antiviral Drugs

There are flu antiviral drugs that can treat the flu or prevent infection with flu viruses.
For treatment, antiviral drugs should be started within 48 hours of getting sick.
For prevention, antiviral drugs are 70% to 90% effective in preventing infection.
These drugs must be prescribed by a health care provider.
If you develop flu-like symptoms (usually a high fever, headache, extreme tiredness, dry cough, sore throat, runny or stuffy nose, muscle aches, stomach symptoms, such as nausea, vomiting, or diarrhea),
or are exposed to the flu before you get a flu vaccine, your health care professional will decide whether you should take antiviral drugs.

Some common terms regarding the flu include:

Epidemic: The rapid spread of a disease that infects some or many people in a region at the same time.

Pandemic: An outbreak of a disease that affects large numbers of people around the world.

Influenza (Flu): A contagious respiratory illness caused by particular strains of viruses.

Influenza (Flu) Pandemic: A global outbreak of the influenza disease that occurs when a new influenza virus appears in the human population. Because people have little or no immunity to the new strain, serious illness can occur, and the virus can spread easily and rapidly from person to person with no vaccine immediately available.

Seasonal Influenza (Flu): A contagious respiratory illness caused by influenza viruses. In the U.S., there is a "flu season" that begins every fall and ends every spring or "seasonally." Most people have some immunity and a vaccine is available, but it still affects an average of 5 to 20 percent of the U.S. population, causing mild to severe illness and at times can lead to death.

Vaccine: An injection that stimulates an immune response that can prevent an infection or create resistance to an infection. Vaccines are usually given as a preventive measure.

Antiviral: A medication that may be used to treat people who have been infected by a virus to help limit the impact of some symptoms and reduce the potential for serious complications. People who are in high risk groups are often given antiviral drugs because of their increased potential to develop additional health issues.

Practice other good health habits.

Get plenty of sleep, be physically active, manage your stress, drink plenty of fluids, and eat nutritious food.

Most healthy people recover from the flu without complications. If you get the flu:

- Stay home,
- Get lots of rest, drink plenty of liquids, and avoid using alcohol and tobacco.
- There are over-the-counter (OTC) medications to relieve the symptoms of the flu (but never give aspirin to children or teenagers who have flu-like symptoms, particularly fever).
- Remember that serious illness from the flu is more likely in certain groups of people including people 65 and older, pregnant women, people with certain chronic medical conditions and young children.
- Consult your doctor early on for the best treatment, but also be aware of emergency warning signs that require urgent medical attention.

Emergency Warning Signs

Children, emergency warning signs that need urgent medical attention include:

- Fast breathing or trouble breathing
- Bluish skin color
- Not drinking enough fluids
- Not waking up or not interacting
- Being so irritable that the child does not want to be held
- Flu-like symptoms improve but then return with fever and worse cough
- Fever with a rash

Adults, emergency warning signs that need urgent medical attention include:

- Difficulty breathing or shortness of breath
- Pain or pressure in the chest or abdomen
- Sudden dizziness
- Confusion
- Severe or persistent vomiting

Seek medical care immediately (call your doctor or go to an emergency room) if you or someone you know is experiencing any of the signs above. When you arrive, tell the reception staff that you think you have the flu. You may be asked to wear a mask and/or sit in a separate area to protect others from getting sick.

Some more common flu terms are:

Social Distancing: A disease prevention strategy in which a community imposes limits on social (face-to-face) interaction to reduce exposure to and transmission of a disease. These limitations could include, but are not limited to, school and work closures, cancellation of public gatherings and closure or limited mass transportation.

Quarantine: The physical separation of healthy people who have been exposed to an infectious disease—for a period of time—from those who have not been exposed.

Isolation: The physical separation of a person suffering from an infectious or contagious disease from others in a community.

Avian Influenza: Commonly known as bird flu, this strain of influenza virus is naturally occurring in birds. Wild birds can carry the virus and may not get sick from it; however, domestic birds may become infected by the virus and often die from it.

H5N1: The scientific name for a subtype of the avian influenza (bird flu) virus that has spread from birds to humans.

Taking action against the flu

An influenza pandemic could significantly impact you and your family...

- You may need to reorganize your life to care for loved ones or to receive care.
- You may lose income if your workplace closes or you become ill.
- School closures can result in the need for home-schooling or other activities for homebound children.
- Access to food and other household goods may become limited.
- Healthcare services may be overwhelmed and/or difficult to access.

Empowering yourself by taking the following positive steps will significantly affect your own response to a flu pandemic in your community. Some simple but vital steps to getting prepared include...

Get prepared for a pandemic

- Download PDF versions or obtain printed copies of the following brochures by contacting your local Red Cross chapter:
  - Family Preparedness Information http://www.redcross.org/portal/site/en/menuitem.86f46a12f382290517a8f210b80f78a0/?vgnextoid=11c1d7ce92dd0210VgnVCM10000089f0870aRCRD&vgnextfmt=default

Learn what to expect during a flu pandemic

- Many people are likely to become ill at the same time.
- Infected people may be physically isolated, which means they are separated from healthy people to reduce the chances of spreading the flu.
- People who have been exposed to the virus may be quarantined.
- Public transportation, gathering places, events, schools and businesses may shut down, close or be canceled.
- Community services and utilities may be disrupted.
- Health care services could become overwhelmed.

Stay informed

- Stay tuned to news and media reports on the status of a pandemic
- Seek information on public services you use that may close and make a plan for alternatives ahead of time.
- Follow updates provided by local public health authorities and personal health care providers.

Stay connected

Collect and keep track of important contact information for people you may need to reach during a flu pandemic. This will ensure that you are able to contact them by telephone, e-mail and other means should you be unable to travel due to movement restriction measures.

Stay healthy

Learn and practice these healthy actions now to make them a healthy habit later and help slow the spread of illnesses:

- Wash your hands often and correctly.
- Cover your cough.
- Stay home when you are sick.

Staying healthy

There are some actions that everyone can practice to slow the spread of the flu and reduce its impact, whether the viruses involved are seasonal or pandemic flu. Practicing these actions now will make them easier to do later.

Hand washing

- Wash your hands with soap and water or clean them with an alcohol-based hand sanitizer. Wash hands for at least 15 seconds. This will reduce the chance of spreading flu from one person to another.
- For visibly soiled hands, first wash with soap and warm water. When using soap and water:
    - Wet hands with water and apply an amount of soap recommended by the manufacturer to hands
    - Rub hands together vigorously for at least 15 seconds, covering all surfaces of the hands and giving added attention to fingernails and surfaces where jewelry is worn
    - Rinse hands with water
    - Dry thoroughly with a disposable towel
    - Use towel to turn off faucet
- For hands that are not visibly soiled, wash with soap and water, use an alcohol-based hand sanitizer (60 percent to 95 per alcohol) or do both. When using hand sanitizer:
    - Use the amount of sanitizer directed in the instructions on the product
    - Rub thoroughly over all surfaces of the hands, including nail areas and between the fingers.
    - Continue to rub until product dries

Other healthy habits

- Cover your mouth and nose with a tissue when you cough or sneeze, and clean your hands afterwards.
    - Use soap and water or an alcohol-based hand sanitizer (as above).
    - If you don't have a tissue or handkerchief, cough or sneeze into the inside of your elbow or upper arm.
    - Whenever possible, avoid coughing or sneezing into your hands.
- Keep your hands away from your eyes, nose and mouth to keep flu germs from entering your body.
- Stay home if you are feeling sick. Get plenty of rest and drink lots of fluids.
- Avoid close contact with people who are sick. The flu virus is spread by respiratory droplets passed from one person to another. These droplets can pass among people in close contact.
- Avoid sharing objects—such as utensils, cups, bottles and telephones. If you must share, disinfect the objects before and after using them.
- Keep your living and work areas clean.

More information

- Family Preparedness Guide Fact Sheet
    - English [PDF]

(Note) The information, resources, and guide fact sheets for this section were obtained from the American Red Cross, the Centers for Disease Control and Prevention, PandemicFlu.gov, and the Kentucky Cabinet for Health and Family Services.

http://www.redcross.org/portal/site/en/menuitem.86f46a12f382290517a8f210b80f78a0/?vgnextoid=11c1d7ce92dd0210VgnVCM10000089f0870aRCRD&vgnextfmt=default
http://www.cdc.gov/flu/
http://www.cdc.gov/flu/protect/preventing.htm
http://www.cdc.gov/flu/freeresources/2009-10/pdf/take3_poster.pdf
http://www.cdc.gov/flu/protect/covercough.htm
http://www.cdc.gov/flu/protect/habits.htm
http://www.cdc.gov/flu/takingcare.htm
http://www.pandemicflu.gov/index.html
http://www.chfs.ky.gov/dph/epi/preparedness/pandemicinfluenza.htm
http://emergency.cdc.gov/disasters/bleach.asp

Pandemic Influenza A virulent influenza (flu) caused by a new flu virus strain to which humans have not been exposed. It is more serious than a typical seasonal flu because there is no natural resistance or immunity to it and infects large numbers of people of different ages all over the world, causing serious illness and possibly death.

Sometimes, a new type of flu virus may emerge to which the general public has no resistance. The lack of immunity enables the virus to spread quickly and easily from person to person impacting communities around the world in a very short time, causing serious illness and death. This kind of flu is called pandemic flu.

Research suggests that it may take two to seven days to show symptoms when a person catches the flu, and the symptoms may last for up to a week.

A person infected with the flu may transmit the flu for one to two days before they have symptoms, and for five to seven days after symptoms begin.

Pandemic flu is more serious than seasonal flu. Most people who get seasonal flu recover within a week or two and usually do not require medical treatment. Pandemic flu is different because more people who get it might not recover, even with medical treatment, and people of every age may be at risk of serious illness or death.

Unlike seasonal flu, there is no vaccine for pandemic flu until researchers and pharmaceutical companies are able to create one, which takes time. Even if a vaccine is developed for the pandemic flu, it will be a challenge to manufacture and dispense the vaccine to everyone in a timely manner.

Scientists cannot accurately predict whether the avian influenza virus (H5N1) will cause the next human pandemic flu or when the next pandemic will occur.

During a flu pandemic, government officials may be required to limit community movement or impose travel restrictions to help prevent the flu virus from spreading. Things to keep in mind:

- You may be asked to stay home for an extended period of time even if you are not sick.
- Schools, workplaces and public gatherings such as sporting events or worship services may close temporarily.
- Mass transportation such as subways, buses, trains and air travel may be limited.
- You, your family and friends may need to rely on each other when you cannot depend on the services you normally use.

Think about how you handle stress and know your strengths. Take steps to plan for, get through and recover from a flu pandemic...

Planning at Home

- Store a two-week supply of food. Select foods that do not require refrigeration, preparation or cooking. Ensure that formula for infants and any child's or older person's special nutritional needs are a part of your planning. Plan for your pets as well. Be sure to have a manual can opener.
- Store a two-week supply of water, 1 gallon of water per person per day, in clean plastic containers. Avoid using containers that will decompose or break, such as milk cartons or glass bottles.
- Store a supply of nonprescription drugs, such as pain relievers, cough and cold medicines, stomach remedies and anti-diarrheal medication, as well as vitamins and fluids with electrolytes (such as sports drinks).
- Store health and cleaning supplies, such as bleach, tissues, a thermometer, disposable gloves, soap and alcohol-based hand sanitizers.
- Ask your health care provider and health insurance company if you can get an extra supply of your regular prescription drugs and medical supplies, such as glucose monitoring supplies.
- Talk with family members and loved ones about how they would be cared for if they got sick.

CUSTODIAL SERVICES

Custodial Services can be coordinated through EKU Facilities Services 859-622-2966 or http://www.facilities.eku.edu/

Bloodborne Pathogen releases or spills, such as blood, vomit, urine, or feces, can be cleaned by contacting EKU Facilities Services.

For other material releases or spills, such as possible radioactive, biological, or chemical materials, or when in doubt about how to proceed, contact: EKU Environmental Health and Safety at 859-622-2421 or 859-622-1111.

TRAINING AND DOCUMENTATION

Do you know what to do in an emergency situation? The Division of Public Safety is available to conduct Emergency Response and Evacuation Procedures Test Exercises for any group or member of the EKU community upon request. For more information, or to schedule a test exercise, please contact EKU Emergency Management at 859-622-8987, 859-622-1111, or email gary.folckemer@eku.edu .
Please visit our Training and Exercises Page: http://emergency.eku.edu/training-and-exercises

This Emergency Action Plan was created by EKU Public Safety and EKU Public Safety officials are available to assist in training on this plan and exercises of this plan. EKU Public Safety can be reached at 859-622-1111 or at http://www.police.eku.edu/ on the web.

Training is an integral part of the safety and preparedness program for your building. It is the responsibility of each department to ensure all their employees are trained on the Building Emergency Action Plan for the building(s) they occupy. It is the responsibility of the occupant to become familiar with the Emergency Action Plan, to know evacuation routes and assembly areas, and to attend training(s) given by their department.Departments can request fire safety and fire extinguisher training from the Richmond Fire/Rescue Department: 859-623-1164 or 859-624-4776. Departments can request crime prevention, workplace violence, and emergency preparedness training from the EKU Police Department: 859-622-1111. Departments can request hazardous materials training through EKU Environmental Health and Safety: 859-622-2421 or 859-622-1111.

DRILLS

Building evacuation drills are optional (with the exception of the residence halls). If your building wishes to have a drill, the Building Supervisor or Facility Leader may coordinate the drill and document it. EKU Division of Public Safety: 859-622-1111 and the Richmond Fire/Rescue Department can help you in your planning: 859-623-1164 or 859-624-4776

This Page Intentionally Left Blank

APPENDICIES

APPENDIX A: ACRONYMS AND TERM DEFINITIONS

Acronyms

BS or FL: Building Supervisor or Facility Leader
BEAP: Building Emergency Action Plan – Adapted from the EAP Emergency Action Plan
EAP: Emergency Action Plan – Basic emergency guide with general information for the entire community
EAA: Emergency or Evacuation Assembly Area
UPD: University Police Department
RFD: Richmond Fire/Rescue Department
EMS: Emergency Medical Services for Madison County
EHS: Environmental Health and Safety

Term Definitions

Building Supervisor or Facility Leader: The Building Supervisor or Facility Leader is a University employee who has a defined role in each campus building. In an emergency, they should physically report to the Incident Command location to provide building information to emergency responders. This would be the field Incident Command location (The area nearby the incident location where emergency responders are working from) rather than the Incident Command Center (ICC) at the Division of Public Safety or the Public Safety Building. The field Incident Command location may or may not be at the Emergency Assembly Area (EAA). The "all clear" information will typically be communicated to the Building Supervisor or Facility Leader, when it is safe to return to the building, so that the occupants can be notified.

Building Emergency Action Plan (Adapted from the Emergency Action Plan): The plan is a document that consists of emergency procedures, information for preparing for emergencies, and roles and responsibilities of building occupants.

Building Safety Team: A group composed of members of each department in the building, generally chaired by the Building Supervisor or Facility Leader or other employee, charged with overseeing building safety concerns.

Department Safety Coordinator: This coordinator is a University employee who assists department management in coordinating, implementing, and documenting the department's safety program. This includes ensuring that a Department Safety Team meets regularly, conducting periodic workplace inspections, and becomes or remains a participant in the comprehensive University Emergency Preparedness Program.

Department Safety Team: A group composed of department representatives from each major unit of the department. If a department occupies different buildings, ideally, representatives from each building serve on the team. Primary functions include:

Serve as a forum for department employees to report and discuss safety or environmental improvements needed.
Identify employee needs for safety training and request training sessions accordingly.
Coordinating Safety Self Audits on a regular basis; assisting department management in prioritizing actions to address safety concerns.
Disseminating information and requirements concerning workplace environmental health and safety.

(Note) The Building Supervisor or Facility Leader is a designated and voluntary position within the University. The Building Supervisor or Facility Leader is a person in responsible charge of the building and in consultation with their superiors and appropriate departmental supervisors, they recruit and appoint Department Safety Coordinators and Building Safety Team members (who may or may not be the same individuals).
The Department Safety Coordinators are designated and voluntary positions within the University. A Department Safety Coordinator is a person in responsible charge of the department and in consultation with their superiors, they recruit and appoint Department Safety Team members.

From a bottom up organizational approach, there are designated and voluntary participants comprising teams at the following levels: A department has a Department Safety Team which is headed by a Department Safety Coordinator. A building has a Building Safety Team which is headed by a Building Supervisor or Facility Leader. The Department Safety Coordinators may be the members of the Building Safety Team however this does not have to be the case depending on department and building organizational structures.
The designation of these roles is accomplished during the development of the Building Emergency Action Plan. The activities of the Safety Teams should be determined by the University Emergency Preparedness Program and the frequency of Safety Team meetings should be determined by their constituent members.

EAA (Emergency Assembly Area): A pre-designated safe location near a building where building occupants assemble and report to the Roll Taker(s) after evacuating their building.

Emergency Responder(s): Person(s) who provide assistance in an emergency (or potential emergency) situation in a building. They are not building occupants and may be from University Police, Fire/Rescue Department, Emergency Medical Services, Physical Facilities, Emergency Management Agency, other Public Safety Officials, etc. In critical situations, they may take charge of the building and have full authority over activities in and around the building.

Roll Taker: A building occupant assigned to take roll, if practical, at the emergency assembly area (EAA) after a building evacuation.

APPENDIX B:RESOURCE LIST

University PoliceDepartment: 911 (Campus Phone) or 859-622-1111 or 859-622-2821 (Outside/ Cell Phone)

Information on Personal Safety and the University Community can be found online at:http://www.police.eku.edu/
Training in Crime Prevention and Workplace Violence can be arranged by contacting the
EKU Police Department at **859-622-1111**

Richmond Fire/Rescue Department: 911 (Emergency) or 859-624-4776 or 859-623-1164 (Non Emergency)
Information on services and training can be found at: http://fire.richmond.ky.us/

Emergency Medical Services – Madison County: 911 (Emergency) or 859-624-4776 or 859-623-5121 (Non Emergency) Information on services and training can be found at: http://www.madisoncountyky.us/

Facilities Services: 859-622-2966
Maintenance, Engineering, Repair, and Custodial Services can be found at: http://www.facilities.eku.edu/

EKU Information Technology (IT)
521 Lancaster Avenue
207Combs Classroom Bldg
Richmond, KY 40475
Phone 859-622-1986
Fax 859-622-2266
http://www.it.eku.edu/
General Information Number

- Off Campus :: 859-622-1411
- On Campus :: 2-1411

IT Helpdesk 859-622-3000
Helpdesk Hours of Operation

- Monday - Friday 8 am - 6:00 pm
- Saturday & Sunday Closed

EKU Office of Services for Individuals with Disabilities: 859-622-2933http://www.disabilities.eku.edu/

Environmental Health and Safety: 859-622-2421 or 859-622-1111
Information on various safety topics, including hazard evaluations and employee training can be obtained at:

Federal Emergency Management Agency
500 C Street SW
Washington, DC 20472
Telephone: 1 (800) 621-FEMA (3362)
TDD: TTY users can dial 1 (800) 462-7585 to use the Federal Relay Service.
http://www.fema.gov/
http://www.ready.gov/

American Red Cross National Headquarters
2025 E Street, NW
Washington, DC 20006
Phone: (703) 206 6000
Donation Hotlines: 1-800-REDCROSS (1-800-733-2767) / 1-800-257-7575 (Español)
http://www.redcross.org/

National Fire Protection Association (NFPA)
NFPA Headquarters
Tel: +1 617 770-3000
Fax: +1 617 770-0700
From Mexico (toll-free) 95-800-844-6058
http://www.nfpa.org/index.asp

National Oceanic and Atmospheric Administration's
National Weather Service
Current Watches, Warnings and Advisories for Kentucky
Issued by the National Weather Service
http://www.crh.noaa.gov/lmk/

National Weather Service:
Point Forecast: Richmond KY
37.75N -84.29W (Elev. 922 ft)
http://forecast.weather.gov/MapClick.php?CityName=Richmond&state=KY&site=LMK&textField1=37.7428&textField2=-84.2936&e=0

US Dept of Commerce
National Oceanic and Atmospheric Administration
National Weather Service
1325 East West Highway
Silver Spring, MD 20910
http://www.noaa.gov/

Emergency Action Plan – Protecting Yourself and Calling for Help

In a **Life-Threatening Emergency - Dial 911**
From a Campus or Public Telephone or use an Emergency Call Box.

Dial **911** from your cell phone (Off Campus) and
Dial **859-622-1111** or **859-622-2821** from your cell phone (On Campus).
Program these numbers into the speed dial function of your cell phone.

1. **Protect Yourself First – Create and Manage Distance and Shielding from Threats**
   Generally, the farther you move away from a threat, and the more solid and stable objects that you position between you and a threat, the safer you are from that threat.

2. **Call 911 or 859-622-1111 or 859-622-2821**

   - Give your name, location, and phone number.
   - Describe the nature of the incident and its location.
   - Describe any injuries, weapons, hazards, devices, and property involved.
   - Describe the people involved, where they are, and where they went.
   - Stay on the line with the Dispatcher until help arrives.
   - Keep the Dispatcher updated on any changes so responding units can be updated.
   - Even if you cannot communicate, keep the line open.
   - The Dispatcher may be able to learn more about what is happening.

Emergency Action Plan – Severe Weather

Severe Weather:
You can check current Watches, Warnings and Advisories for Madison County Kentucky by checking the links for the National Oceanic and Atmospheric Administration and the National Weather Service Websites.

http://www.crh.noaa.gov/lmk/

http://forecast.weather.gov/MapClick.php?CityName=Richmond&state=KY&site=LMK&textField1=37.7428&textField2=-84.2936&e=0

Tornado Warning = A Tornado has been sighted or indicated by weather radar. Take Shelter Immediately.

D = Downstairs: Get to the lowest level you can, a basement if you have one, or just the ground floor.

U = Under: Get under something sturdy like a heavy table or staircase to protect yourself from flying objects.
Protect your head.
C = Center: Go to the center part of a permanent structure. Put as many walls as you can between you and the outside.
A closet, hallway or bathroom in the middle of the building is a good choice.
K = Keep Away: Keep away from exterior doors and windows, which can be sources of flying glass and debris.

http://www.lex18.com/Global/story.asp?s=8061636

Numbers for Non-Emergency Public Use:
Eastern Kentucky University – Facilities Services: 859-622-2966
Madison County Emergency Management Agency: 859-624-4787
Traffic Information: 511
Kentucky Utilities: 1-800-981-0600
Blue Grass Energy: 1-888-655-4243
Clark Energy: 1-800-992-3269
Do not call 911 unless there is a life threatening situation.

Residents are urged to listen to local radio stations for information.
Local Emergency Alert System radio stations include:
WCBR 1110 AM, WEKY 1340 AM, WIRV 1550 AM,
WEKU 88.9 FM, WCYO 100.7 FM, WLFX 106.7 FM

When You Are Out Of Immediate Danger: Contact the people who are concerned for your wellbeing.
This may include your parents, your professors, your significant other, your employer, and housing staff.
Let them know where you are and what your condition is.

Emergency Action Plan – Active Shooter

Protect Yourself and Warn Others (Create and Manage Distance and Shielding from Threats)

Evacuate or Shelter - Escape If You Can and Avoid the Danger
Move Out of Public Areas into an Office or Classroom - If You Cannot Escape
Assemble / Account For Those You Are Responsible For
Close and Lock the Doors and Windows
Barricade the Door – If the Door Will Not Lock
Obstruct Sight Lines Into the Secured Area
Lights and A/V Off – Get Down – Take Cover – Away From Doors and Windows
Avoid Fields of Fire – Be Quiet – Pretend No One is Home – Do Not Answer or Open the Door
Wait for Police to Help You Out of the Building

What To Do When Police Arrive
Police Priority is to Contact and Stop the Threat
!!! DANGER !!! DANGER !!!
Do Not Pose a Threat - Show and Empty Your Hands - Get Down On The Ground - Follow the Orders of the Police
Plan for Your Survival – Reasonable Options Can Include:

R.S.V.P. = Run – Shelter & Shield – Vigorously Fight – Play
Run - Run from the threat if you think you can do so safely.
Run at angles from the shooter and put cover or obstacles between you and the danger.
Shelter & Shield - Shelter or Shield yourself from the threat if you think that running might place you in more danger. Lock yourself in a defensible space and call for help.
Vigorously Fight - Fight an attacker if you think that greater harm will come to you if you do not fight.
If You Fight – You Must Be: Valiant – Vicious – Victorious
If You Fight – Verbalize: Stop! - Drop the Weapon! - Down on the Ground!
Play - Play incapacitated.
Play whatever you think if you think it might help your chances of survival.

Call 911 for Help (See Calling for Help) – Report to Police as soon as you are out of immediate danger

Emergency Action Plan – Alerting Others

Emergency
University Police – EKU Police Department: Dial 911

Non Emergency
University Police – EKU Police Department: 859-622-1111
Student Rights and Responsibilities: 859-622-1500
Counseling Center: 859-622-1303
Student Health Services: 859-622-1761
Services for Individuals with Disabilities: 859-622-2933
University Housing: 859-622-1515
Equal Opportunity Office: 859-622-8020

If you are Dealing with Students in Difficulty:

- Be aware of the location of the nearest telephone, whether it is within the building or a personal cell phone.
- If the student is a threat to others, contact 911 or University Police immediately and complete an incident report for the Office of Student Rights and Responsibilities at the Turley House 859-622-1500.
- If the student is causing a classroom disruption, but not a threat to others, discuss with the student individually and complete an incident report for the Office of Student Rights and Responsibilities.
- You may always ask the disruptive student to leave the classroom.

If in doubt, always call the University Police.
An EKU Police Officer will Respond, Assess, and Assist.

EKU Faculty/Staff 911 Guide – Helping Students In Difficulty

APPENDIX C: MADISON COUNTY KENTUCKY

EMERGENCY MANAGEMENT AGENCY (EMA) and the
CHEMICAL STOCKPILE EMERGENCY PREPAREDNESS PROGRAM (CSEPP)

Madison County Emergency Management Agency
560 S. Keeneland Drive
Richmond, KY 40475
859-624-4787

http://www.madisoncountyema.net/

The Chemical Stockpile Emergency Preparedness Program (CSEPP) is a joint venture between the United States Army and the Federal Emergency Management Agency (FEMA) to assist state and local governments to improve emergency planning and preparedness in communities near chemical weapons storage sites in the United States.

Even though an accidental chemical agent release is highly unlikely, this planning process is important because it requires coordination of local military and civilian efforts and ensures that decisions will be made and carried out effectively in a crisis.

The two remaining stockpiles are secured at the Blue Grass, KY. and Pueblo, CO., U.S. Army installations. Each community provides its residents important emergency preparedness information. The chemical stockpiles at the Edgewood Area of Aberdeen Proving Ground in Maryland, the Pine Bluff Aresnal in Arkansas and the Newport Chemical Depot in Indiana were completely destroyed. In 2000, a stockpile on Johnston Atoll, an island in the Pacific Ocean, was also completely destroyed.

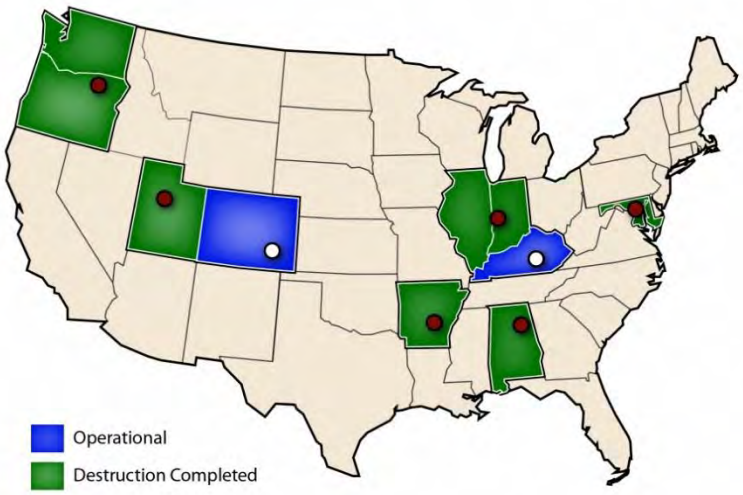

Adviser Alert Radios (AARs)

Beginning in the spring of 2011, Adviser Alert Radios (AARs) were sent out to eligible addresses within Madison County. These radios replaced the original Tone Alert Radios (TARs) distributed in Madison County in the mid-1990s. The AARs have a longer battery life, text display, AM/FM radio capabilities, and additional user-friendly features.

This upgrade also extended the coverage area within the county. Previously, TARs were distributed to a 6.2 mile radius from the chemical limited area at the Blue Grass Army Depot. Now, AARs are distributed to a 9.2 mile radius as well as to residents within the city limits of Berea. Madison County EMA/CSEPP recommends residents outside this area purchase a weather radio at a local retailer.

All "special population facilities" received an AAR, no matter what their location in the county. Special population facilities include schools, daycares, long-term care facilities and hospitals.

Old TARs are no longer operational, so there is no need to keep an old TAR, but they do not belong in the garbage – they will be properly recycled by Madison County EMA/CSEPP.

If you still possess one of the old TARs, you may drop it at one of the following locations:
•558 South Keeneland DR Richmond, KY
•200 Harrison RD Berea, KY

Outdoor Warning System

Sirens are designed as an outdoor warning system. They alert people who are outside that an emergency has occurred or is imminent. The purpose is to move persons into a shelter, and have them tune to Emergency Alert System (EAS) radio stations for more information.
•WEKY 1340 AM
•WEKU 88.9 FM
•WCBR 1110 AM
•WLFX 106.7 FM
•WCYO 100.7 FM
•WIRV 1550 AM
•Time Warner Cable

Ninety (90) sirens are located throughout Madison County. The sirens are strategically placed in more heavily populated areas of the county, including Richmond, the Eastern Kentucky University campus, Berea, Fort Boonesborough, White Hall, Kingston, Union City, and Kirksville.

The siren system has three (3) different wails or tones. Different tones are used for different types of emergencies. Each tone lasts for forty-five (45) seconds, and is followed by a fifteen (15) second voice message.

The steady wail is the severe weather tone. It is a continuous forty-five (45) second screech that sounds like a conventional siren. A voice message will either state that the National Weather Service has issued a severe weather warning, instructing listeners to tune to local radio and television stations, or it will state the type of warning (thunderstorm or tornado) and instruct listeners to seek shelter immediately.

The alternate steady wail is the chemical incident tone. It is a series of two high-pitched beeping sounds. The beep last for forty-five (45) seconds, and are followed by a message that tells residents an incident has occurred, and to listen to local EAS radio stations.

Westminster Chimes is the testing wail. Tests are conducted on the first Saturday and the third Wednesday of every month at 12:20 in the afternoon.

SHELTER IN PLACE

What is Sheltering in Place?

"Shelter in Place" is one of the basic instructions you may receive from EMA officials during a chemical emergency in Madison County. Sheltering in place during a chemical emergency offers you and your family immediate protection for a short time in your home.

Here and all across the nation, emergency officials may advise sheltering in place in any one of these conditions:

- A chemical leak is expected to last for a short time,
- A chemical has a low health hazard and its release does not warrant an evacuation,
- There is not time to evacuate,
- Chemical fumes could quickly overtake you if you are outside.

If you are told to shelter in place, take your children and pets indoors immediately.

In the event of a chemical emergency at the Blue Grass Army Depot, people in Kentucky who are within 6.2 miles of the Depot would be advised to shelter in place. This area is called the Immediate Response Zone (IRZ). People outside these areas, may not need to shelter in place, but this would be determined on a case by case basis.

Information provided by the National Institute for Chemical Studies (NICS). Visit them online at www.nicsinfo.org.

The following general information is a guide on how you can be ready and set to act quickly in a chemical emergency.

BEFORE A CHEMICAL EMERGENCY

A chemical emergency may occur anywhere hazardous materials are manufactured, stored or transported. Chemical plants are obvious sources of potential accidents. Less obvious are highways, railways and storage containers at places such as swimming pools (chlorine). Study your surroundings for fixed and mobile sources of hazardous materials.

- Find out how you would be alerted in the event of a chemical emergency. Learn about the public warning systems where you live and work. These systems will be tested on a regular schedule. Learn when the tests are conducted.
- Keep your shelter-in-place kit in an easily accessible place. The kit should contain duct tape for sealing cracks around doors and windows; plastic to cover windows and the door; scissors and a battery operated AM/FM radio. You may also want to add these items: a flashlight with fresh batteries; bottled water; toys for young children; candles; matches; first aid kit; medicine and other items essential for your family's comfort.
- For more information call the Madison County EMA at (859) 624 4787.
- For a place to shelter, select a room in your home or business that has few or no windows. The room should have a telephone, although you should use it only for emergency calls. If you use it otherwise, you may be taking up a line needed by emergency response officials.
- Measure the window(s) and door and cut pieces of plastic to fit them. *Hint: Cut the plastic at least 6 inches wider than the actual size. This makes it easier to put the plastic up if needed.* Use a marker to write on the individual sheets and where they go. Fold and place back in your shelter in place kit.
- Ensure everyone in your family knows where they kit is stored.
- Check the kit every six months to make sure all the supplies are still there and that they are fresh.
- Local radio and television stations usually carry emergency broadcasts. In some communities, cable companies have also agreed to carry emergency messages. Information will not be broadcast on satellite based services that do not carry local programming.

- Ensure all family members know what to do in a chemical emergency, whether they are at home, school, work or outdoors.

- Review your plan periodically and conduct drills.

- NOTE: If you have a home, business, class, club or group who would like to have a presentation about sheltering in place or how to prepare for a possible emergency at the Blue Grass Army Depot please contact us (The Madison County Emergency Management Agency).

DURING A CHEMICAL EMERGENCY

You may hear about a chemical emergency or severe weather condition through the Emergency Alert System, community warning sirens, highway message reader boards, or tone alert radios. People in Madison County who are in the Immediate Response Zone would be advised to shelter in place.

- Listen to make sure that you are in the area that is being asked to shelter.

- Take visiting friends, pets and/or fellow workers immediately indoors.

- Close and lock all windows and doors. Locking creates a better seal.

- Shut off heating / air-conditioning systems and fans that draw air from the outside. Close vents.

- If you have a fireplace, put out the fire and close the damper.

- Go to the room you have chosen as your shelter. Bring your shelter kit, enough food and water for a few hours, your Tone Alert Radio and a portable AM/FM radio into this room. We recommend that you keep both your Tone Alert Radio and Shelter In Place kit in your selected shelter.

- Shut and seal the door to the rest of the house with plastic and duct tape. Put duct tape on electrical outlets and vents. Use duct tape and plastic to cover any windows.
    - NOTE: You will not run out of air in a shelter room.
    - Sealing the room just slows the flow of air from the outside.
    - This protects you longer from possible exposure.

- Turn on your radio and listen for further information and instructions provided by your Tone Alert Radio or one of the following Madison County radio stations:

  1340 WEKY-AM
  88.9 WEKU-FM
  1110 WCBR-AM
  106.7 WLFX-FM
  100.7 WCYO-FM

IF THE DECISION IS MADE BY EMERGENCY MANAGEMENT OFFICIALS TO EVACUATE
KNOW YOUR ZONE AND GO

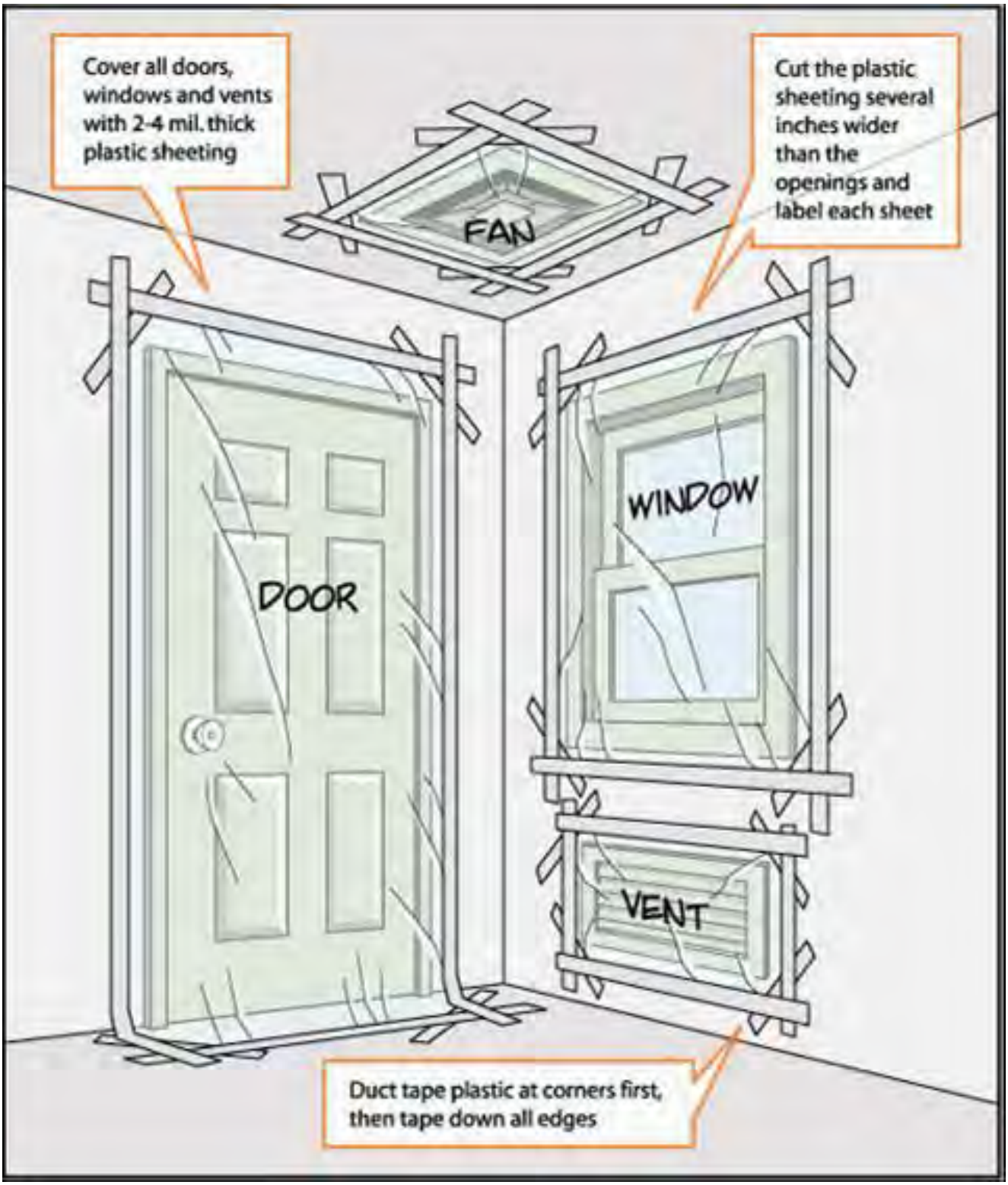
Cover all doors, windows and vents with 2-4 mil. thick plastic sheeting
Cut the plastic sheeting several inches wider than the openings and label each sheet
FAN
DOOR
WINDOW
VENT
Duct tape plastic at corners first, then tape down all edges

Madison County CSEPP Map

Madison County
Safe at Home

Zone 2-E

Communities located in Zone 2-E include part of the City of Richmond and Telford Community Center.

Zone 2-E is bounded on the west side beginning at Interstate 75, Exit 87 to Exit 90. Beginning at Exit 90, it extends south on U.S. 25/421 to the intersection of U.S. 25 and the Easter By Pass (KY 876) and then west on Easter By Pass to Interstate 75.

People living in Zone 2-E will be advised to evacuate to Jacobson Park in Lexington. Take the quickest route to Interstate 75 North. Travel Interstate 75 to Exit 104 and turn left onto Richmond Road. Proceed on Richmond Road to Jacobson Park on the right.

Madison County CSEPP Map

Madison County
Safe at Home

Zone 2-D

Communities in Zone 2-D include the City of Richmond, Terrill, Pattie A. Clay Hospital, Richmond Mall, Richmond Plaza Shopping Center, University Shopping Center, Wal-Mart, and the Richmond Industrial Park.

Zone 2-D is bounded on the north by Easter By Pass (KY 876) beginning at Interstate 75 (Exit 87). It travels east to U.S. 25/421, south on U.S. 25/421 to the Blue Grass Army Depot boundary, following U.S. 421 to the intersection of Crooksville Road 9KY 499), south on Crooksville road to U.S. 25, south on U.S. 25 to Menelaus road, and west on Menelaus Road to the underpass of Interstate 75. Interstate 75 to Exit 87 is the west boundary of this zone.

People living in Zone 2-D will be advised to evacuate to North Laurel High School in London. Take the quickest route to Interstate 75 and then south to Exit 41 or U.S. 25 south to London.

ACKNOWLEDGEMENT

IACLEA

CAMPUS
EMERGENCY
OPERATIONS
PLANNING GUIDE

Rev. 08/08/07

IACLEA

The International Association of Campus Law Enforcement Administrators advances public safety for educational institutions by providing educational resources, advocacy and professional development.

IACLEA Headquarters

Mailing Address:	342 N. Main Street West Hartford, CT 06117-2507
Telephone:	(860) 586-7517
Fax:	(860) 586-7550
Email:	info@iaclea.org
Web site:	www.iaclea.org

The Eastern Kentucky University Division of Public Safety and the IACLEA staff and the members of the Best Practices Subcommittee associated with this project wish to thank everyone who donated information directly to IACLEA or who placed materials on the Internet and in the public domain, without which this planning guide could not have been assembled for use by campus administrators and planners.

This project was developed by IACLEA. It is supported by the federal University and College Domestic Preparedness Assistance Grant Award #2003-TG-TX-0001, as administered by the U.S. Department of Homeland Security, Office of Domestic Preparedness. Any points of view or opinions expressed in this document are those of the authors and do not represent the official position or policies of the U.S. Department of Homeland Security.

EKU Emergency Guide

Fire / Fire Alarm

E.A.C.H. person is responsible for their own safety.
If you discover smoke, fire, or hear a fire alarm, you should:

E — Evacuate the building. Do not use elevators.
A — Alert others. Activate the alarm (if necessary). Assist others as you leave. Report to emergency personnel any individuals with loss of mobility, sight or hearing, of which you are aware.
C — Call 911 for help. Report relevant information about the smoke/fire/alarm.
H — Have a plan. Be knowledgeable about fire safety. Take every alarm seriously.

A building occupant is required by law to evacuate the building when a fire alarm sounds. Know at least two escape routes. Never use elevators to evacuate. Use the stairs. Do not re-enter a building or work area until you have been instructed to do so by emergency responders. Individuals in wheelchairs, move to a safe location, and call 911 to report your location. Individuals with hearing loss can call Public Safety via TDD at 859-622-6279 and/or text message someone who can inform authorities.

If you are behind a closed door, feel the door before opening. If the door is hot, do not open. If it is cool, open it slowly and check that fire and/or smoke is not blocking your escape route.

Bomb Threats

If you receive a bomb threat (i.e. telephone call) - ask about it:

- When is the bomb going to explode?
- Where is the bomb located?
- What does it look like?
- What kind of bomb?
- What will make it explode?

Make note of as many details about the conversation as possible.

Call 911 and report any bomb threats received or any suspicious packages that you observe. Do not use cellular phones or radios in close proximity to any suspicious package.

Protect yourself. Evacuate the area being mindful that explosive devices could be placed along your exit path.

If you received the threat in written or electronic form, preserve it, and notify law enforcement officials immediately.

For more information, consult the EKU Emergency Action Plan, which is available online at http://www.emergency.eku.edu.

Severe Weather

In order to protect yourself, it is important to know the difference between severe weather watches and warnings.

Watch—Severe weather is possible due to weather conditions. Remain alert and monitor television, radio, or other weather media.

Warning—Severe weather has been reported. Warnings mean danger is imminent. SEEK SHELTER IMMEDIATELY.

If a tornado warning has been issued, go to a pre-designated shelter area or the lowest level of the building. Go to the center of an interior room on the lowest level (closet, interior hallway) away from corners, windows, doors, and exterior walls. Get under a sturdy table (if possible) and use your arms to protect your head and neck. Do not open windows. If you are in a vehicle or mobile home, get out immediately and seek shelter in a nearby building. If you are outside and shelter is not available, lie flat in a ditch and cover your head with your hands. Be aware of the potential for flooding. Do not get under an overpass or a bridge.

Hostile Intruder

A hostile intruder can be in the form of a verbally or physically aggressive person, a hostage taker, or an active shooter. **If you find yourself involved in a hostile intruder situation, only you can determine the best course of action to ensure your safety.**
Ways that you can protect yourself include:

- Call 911 as soon as possible.
- Secure your immediate area. Lock and/or barricade doors. Turn the lights down. Close blinds and block windows. Turn off or silence electronic devices. Keep the occupants calm, quiet, and out of sight.
- If you determine the best course of action is to leave the immediate area, consider your risks prior to evacuating. You should only attempt to rescue others if it can be accomplished without further endangering people in the area.
- Be prepared to change your actions as the situation changes. Possible actions may include running, hiding, complying, or fighting.

Emergency: 911
On Campus Telephone: 911
EKU Police/Public Safety 859-622-1111

Medical Emergencies

In the event that someone is in need of emergency medical attention, you can render assistance and protect yourself by following these procedures:

Check — Check the scene for safety. If it is safe, check the victim for consciousness.

Call — Call 911 and report the medical emergency. Provide as much information as you can about the person's illness or injury.

Care — Care for the illness or injury within the scope of your training. Provide only the care that you are trained or certified to provide.

Do not move the injured or ill person unless it is necessary for safety reasons. Moving the person could cause further injuries.

Chemical Incidents

Chemical Spills:

- Evacuate the spill area immediately.
- Secure the location (if possible).
- Isolate exposed individuals for decontamination, evaluation, and treatment.
- Call 911 and report the spill. Provide as much information as possible.

Chemical Release (Blue Grass Army Depot / Rail / Etc.):
Zones 2E and 2D could be instructed to either shelter-in-place or evacuate.

Shelter-in-Place—Close and lock all windows and doors. Turn off heating and cooling units. Campus buildings which have been improved for shelter-in-place are: Alumni Coliseum, Combs Classroom, Model Gymnasium, Perkins Building, Thompson Hall, University Building, and Whitlock Building. If possible, seek shelter in these.

Evacuation—If evacuation or relocation is ordered, the Madison County Emergency Management Agency will determine the best available location for EKU to go to.

Date Created: 2/01/2010
Date Revised: 7/06/2015
Revision Number 7

EASTERN KENTUCKY UNIVERSITY
RESIDENCE HALL EMERGENCY PROCEDURE

University Police Department Telephone Numbers:
Emergency: 911 Non-Emergency: 859-622-1111

INJURY OR ILLNESS:

Non-life Threatening Situation

Contact the University Police Department at 911 and provide all information requested.

Life Threatening Situation

- Do not attempt to move a victim unless absolutely necessary
- Contact EKU Police at 911
- If victim is not breathing, administer CPR if you are trained

FIRE:

When the building fire alarm sounds, Kentucky law mandates that everyone must evacuate the building. Close your door as you leave.

- If smoke or flame is detected, and the alarm is not sounding, activate the fire alarm as you exit.
- During the evacuation, go to the nearest exit.
- Do NOT use the elevator.
- If smoke is present, keep low to the floor.
- Once outside, move away from the building.

When Evacuation is Not Possible

In a fire or fire alarm situation, always check doors to see if they are hot or warm to the touch before you open them. If heat or smoke prevents you from evacuating, return to your room and use towels or other cloth items to seal around the door. Hang a white object out the window and reclose the window as much as possible. Do not reopen your window unless forced to do so by smoke. After you have sealed your door, immediately call University Police at 911 and advise them of your location and situation. Wait for help to arrive.

TORNADO:

Watch: A tornado watch is in effect when conditions are such that a tornado COULD develop. Turn on a radio or TV to monitor further development.

Warning: Warnings are issued only when an actual tornado has been spotted or indicated on radar. You should immediately go to the designated severe weather shelter area in your building. Severe weather shelters are shown on the emergency procedure place cards on your floor. If you need further information, contact your Resident Assistant.

Sirens: The city of Richmond has an outdoor emergency warning system for severe weather near campus. If the siren sounds, please move indoors immediately and proceed to the "severe weather shelters" designated in each building.

CRIME IN PROGRESS:

If you observe a suspicious person, activity, or crime in progress, contact the University Police at 911 immediately. Describe the suspicious activity or action-taking place. Be prepared to give a complete physical description if possible. DO NOT attempt to apprehend someone or put yourself at risk.

ROOM SECURITY:

Keep your doors locked at all times, especially if you leave your room, even for a short time. Keep an inventory of your possessions and engrave them with some form of identifying number or marking so they can be identified by you if they are stolen.

WINDOWS and LEDGES:

Building ledges are not balconies. Students and their guests are completely prohibited from accessing building ledges, roofs, walking or sitting on ledges or roofs, or being on ledges or roofs for any reason, except as directed by emergency personnel.

EMERGENCY PROCEDURES

EMERGENCY ACTIONS – PROTECTING YOURSELF AND CALLING FOR HELP

EMERGENCY ACTION

In a **Life-Threatening Emergency - Dial 911**
From a Campus or Public Telephone or use an Emergency Call Box.

Dial **911** from your cell phone (Off Campus) and
Dial **859-622-1111** or **859-622-2821** from your cell phone (On Campus).
Program these numbers into the speed dial function of your cell phone.

1. **Protect Yourself First – Create and Manage Distance and Shielding from Threats**
   Generally, the farther you move away from a threat, and the more solid and stable objects that you position between you and a threat, the safer you are from that threat.

2. **Call 911 or 859-622-1111 or 859-622-2821**

   - Give your name, location, and phone number.
   - Describe the nature of the incident and its location.
   - Describe any injuries, weapons, hazards, devices, and property involved.
   - Describe the people involved, where they are, and where they went.

   - Stay on the line with the Dispatcher until help arrives.
   - Keep the Dispatcher updated on any changes so responding units can be updated.
   - Even if you cannot communicate, keep the line open.
   - The Dispatcher may be able to learn more about what is happening.

(Note) Dialing 911 from an on campus (land line or corded) telephone, using an emergency call box, or dialing 859-622-1111 or 859-622-2821 from a cellular phone will connect you to the EKU Public Safety Dispatch Center. Dialing 911 from a cellular phone or dialing 859-624-4776 will connect you to the Madison County 911 Center. In any case, you can summon the help you need.

POLICE, FIRE, RESCUE, HAZMAT, EMS
911 Emergency
859-622-1111 EKU Public Safety – Non Emergency
859-624-4776 Madison County 911 Center – Non Emergency
800-424-8802 National Response Center (NRC)
http://hq.**MSDS**online.com/eku/Search/ListProducts.aspx?new=true&PageNumber=1&Sort=1&SortDirection=asc

Poison Control Center 1-800-222-1222

Numbers for Non-Emergency Public Use:
Eastern Kentucky University – Facilities Services: 859-622-2966
Madison County Emergency Management Agency: 859-624-4787
Traffic Information: 511
Kentucky Utilities: 1-800-981-0600
Blue Grass Energy: 1-888-655-4243
Clark Energy: 1-800-992-3269

Residents are urged to listen to local radio stations for information.
Local Emergency Alert System radio stations include:
WCBR 1110 AM, WEKY 1340 AM, WIRV 1550 AM
WEKU 88.9 FM, WCYO 100.7 FM, WLFX 106.7 FM

http://www.madisoncountyema.net/

Eastern Kentucky University is Located in Zones 2E and 2D of the Chemical Stockpile Emergency Preparedness Program (CSEPP)
Enhanced Shelter-In-Place (ESIP) Areas are Located in the Following Buildings(A.C.M.P.T.U.W.)
Alumni Coliseum, Combs Building, Model Gym, Perkins Building, Thompson Hall, University Building, Whitlock Building

DISASTER SUPPLIES

Are You Ready?

Assemble a Disaster Supplies Kit

You may need to survive on your own after a disaster. This means having your own food, water, and other supplies in sufficient quantity to last for at least three days. Local officials and relief workers will be on the scene after a disaster, but they cannot reach everyone immediately. You could get help in hours, or it might take days.

Basic services such as electricity, gas, water, sewage treatment, and telephones may be cut off for days, or even a week or longer. Or, you may have to evacuate at a moment's notice and take essentials with you. You probably will not have the opportunity to shop or search for the supplies you need.

A disaster supplies kit is a collection of basic items that members of a household may need in the event of a disaster.

Kit Locations

Since you do not know where you will be when an emergency occurs, prepare supplies for home, work, and vehicles.

Home	Work	Car
Your disaster supplies kit should contain essential food, water, and supplies for at least three days. Keep this kit in a designated place and have it ready in case you have to leave your home quickly. Make sure all family members know where the kit is kept. Additionally, you may want to consider having supplies for sheltering for up to two weeks.	This kit should be in one container, and ready to "grab and go" in case you are evacuated from your workplace. Make sure you have food and water in the kit. Also, be sure to have comfortable walking shoes at your workplace in case an evacuation requires walking long distances.	In case you are stranded, keep a kit of emergency supplies in your car. This kit should contain food, water, first aid supplies, flares, jumper cables, and seasonal supplies.

Water

How Much Water do I Need?
You should store at least one gallon of water per person per day. A normally active person needs at least one-half gallon of water daily just for drinking.

Additionally, in determining adequate quantities, take the following into account:

- Individual needs vary, depending on age, physical condition, activity, diet, and climate.
- Children, nursing mothers, and ill people need more water.
- Very hot temperatures can double the amount of water needed.
- A medical emergency might require additional water.

How Should I Store Water?
To prepare safest and most reliable emergency supply of water, it is recommended you purchase commercially bottled water. Keep bottled water in its original container and do not open it until you need to use it.

Observe the expiration or "use by" date.
If you are preparing your own containers of water
It is recommended you purchase food-grade water storage containers from surplus or camping supplies stores to use for water storage. Before filling with water, thoroughly clean the containers with dishwashing soap and water, and rinse completely so there is no residual soap. Follow directions below on filling the container with water.

If you choose to use your own storage containers, choose two-liter plastic soft drink bottles – not plastic jugs or cardboard containers that have had milk or fruit juice in them. Milk protein and fruit sugars cannot be adequately removed from these containers and provide an environment for bacterial growth when water is stored in them. Cardboard containers also leak easily and are not designed for long-term storage of liquids. Also, do not use glass containers, because they can break and are heavy.

If storing water in plastic soda bottles, follow these steps
Thoroughly clean the bottles with dishwashing soap and water, and rinse completely so there is no residual soap. Sanitize the bottles by adding a solution of 1 teaspoon of non-scented liquid household chlorine bleach to a quart of water. Swish the sanitizing solution in the bottle so that it touches all surfaces. After sanitizing the bottle, thoroughly rinse out the sanitizing solution with clean water.

Filling water containers
Fill the bottle to the top with regular tap water. If the tap water has been commercially treated from a water utility with chlorine, you do not need to add anything else to the water to keep it clean. If the water you are using comes from a well or water source that is not treated with chlorine, add two drops of non-scented liquid household chlorine bleach to the water. Tightly close the container using the original cap. Be careful not to contaminate the cap by touching the inside of it with your finger. Place a date on the outside of the container so that you know when you filled it. Store in a cool, dark place. Replace the water every six months if not using commercially bottled water.

Food

The following are things to consider when putting together your food supplies:

- Avoid foods that will make you thirsty. Choose salt-free crackers, whole grain cereals, and canned foods with high liquid content.
- Stock canned foods, dry mixes, and other staples that do not require refrigeration, cooking, water, or special preparation. You may already have many of these on hand. (Note: Be sure to include a manual can opener.)
- Include special dietary needs.

Basic Disaster Supplies Kit

The following items are recommended for inclusion in your basic disaster supplies kit:

- Three-day supply of non-perishable food.
- Three-day supply of water - one gallon of water per person, per day.
- Portable, battery-powered radio or television and extra batteries.
- Flashlight and extra batteries.
- First aid kit and manual.
- Sanitation and hygiene items (moist towelettes and toilet paper).
- Matches and waterproof container.
- Whistle.
- Extra clothing.
- Kitchen accessories and cooking utensils, including a can opener.
- Photocopies of credit and identification cards.
- Cash and coins.
- Special needs items, such as prescription medications, eye glasses, contact lens solutions, and hearing aid batteries.
- Items for infants, such as formula, diapers, bottles, and pacifiers.
- Other items to meet your unique family needs.

If you live in a cold climate, you must think about warmth. It is possible that you will not have heat. Think about your clothing and bedding supplies. Be sure to include one complete change of clothing and shoes per person, including:

- Jacket or coat.
- Long pants.
- Long sleeve shirt.
- Sturdy shoes.
- Hat, mittens, and scarf.
- Sleeping bag or warm blanket (per person).

Be sure to account for growing children and other family changes. You may want to add some of the items listed to your basic disaster supplies kit depending on the specific needs of your family.

Maintaining Your Disaster Supplies Kit

Just as important as putting your supplies together is maintaining them so they are safe to use when needed. Here are some tips to keep your supplies ready and in good condition:

- Keep canned foods in a dry place where the temperature is cool.
- Store boxed food in tightly closed plastic or metal containers to protect from pests and to extend its shelf life.
- Throw out any canned good that becomes swollen, dented, or corroded.
- Use foods before they go bad, and replace them with fresh supplies.
- Place new items at the back of the storage area and older ones in the front.
- Change stored food and water supplies every six months. Be sure to write the date you store it on all containers.
- Re-think your needs every year and update your kit as your family needs change.
- Keep items in airtight plastic bags and put your entire disaster supplies kit in one or two easy-to-carry containers, such as an unused trashcan, camping backpack, or duffel bag.

Disaster Supplies Checklists (PDF 41KB)
The following list is to help you determine what to include in your disaster supplies kit that will meet your family's needs.

First Aid Supplies

Supplies	Home	Vehicle	Work
Adhesive bandages, various sizes	☐	☐	☐
5 " x 9 " sterile dressing	☐	☐	☐
Conforming roller gauze bandage	☐	☐	☐
Triangular bandages	☐	☐	☐
3 " x 3 " sterile gauze pads	☐	☐	☐
4 " x 4 " sterile gauze pads	☐	☐	☐
Roll 3 " cohesive bandage	☐	☐	☐
Germicidal hand wipes or waterless, alcohol-based hand sanitizer	☐	☐	☐
Antiseptic wipes	☐	☐	☐
Pairs large, medical grade, non-latex gloves	☐	☐	☐
Tongue depressor blades	☐	☐	☐
Adhesive tape, 2 " width	☐	☐	☐
Antibacterial ointment	☐	☐	☐
Cold pack	☐	☐	☐
Scissors (small, personal)	☐	☐	☐
Tweezers	☐	☐	☐
Assorted sizes of safety pins	☐	☐	☐
Cotton balls	☐	☐	☐
Thermometer	☐	☐	☐
Tube of petroleum jelly or other lubricant	☐	☐	☐
Sunscreen	☐	☐	☐
CPR breathing barrier, such as a face shield	☐	☐	☐
First aid manual	☐	☐	☐

Non-Prescription and Prescription Medicine Kit Supplies

Supplies	Home	Vehicle	Work
Aspirin and non-aspirin pain reliever	☐	☐	☐
Anti-diarrhea medication	☐	☐	☐
Antacid (for stomach upset)	☐	☐	☐
Laxative	☐	☐	☐
Vitamins	☐	☐	☐
Prescriptions	☐	☐	☐
Extra eyeglasses/contact lenses	☐	☐	☐

Sanitation and Hygiene Supplies

Item		Item	
Washcloth and towel	☐	Heavy-duty plastic garbage bags and ties for personal sanitation uses and toilet paper	☐
Towelettes, soap, hand sanitizer	☐	Medium-sized plastic bucket with tight lid	☐
Tooth paste, toothbrushes	☐	Disinfectant and household chlorine bleach	☐
Shampoo, comb, and brush	☐	A small shovel for digging a latrine	☐
Deodorants, sunscreen	☐	Toilet paper	☐
Razor, shaving cream	☐	Contact lens solutions	☐
Lip balm, insect repellent	☐	Mirror	☐
Feminine supplies	☐		

Equipment and Tools

Tools		Kitchen items	
Portable, battery-powered radio or television and extra batteries	☐	Manual can opener	☐
NOAA Weather Radio, if appropriate for your area	☐	Mess kits or paper cups, plates, and plastic utensils	☐
Flashlight and extra batteries	☐	All-purpose knife	☐
Signal flare	☐	Household liquid bleach to treat drinking water	☐
Matches in a waterproof container (or waterproof matches)	☐	Sugar, salt, pepper	☐
Shut-off wrench, pliers, shovel, and other tools	☐	Aluminum foil and plastic wrap	☐
Duct tape and scissors	☐	Resealable plastic bags	☐
Plastic sheeting	☐	Small cooking stove and a can of cooking fuel (if food must be cooked)	☐
Whistle	☐		
Small canister, ABC-type fire extinguisher	☐	**Comfort Items**	
Tube tent	☐	Games	☐
Compass	☐	Cards	☐
Work gloves	☐	Books	☐
Paper, pens, and pencils	☐	Toys for kids	☐
Needles and thread	☐	Foods	☐
Battery-operated travel alarm clock	☐		

Food and Water

Supplies	Home	Vehicle	Work
Water	☐	☐	☐
Ready-to-eat meats, fruits, and vegetables	☐	☐	☐
Canned or boxed juices, milk, and soup	☐	☐	☐
High-energy foods such as peanut butter, jelly, low-sodium crackers, granola bars, and trail mix	☐	☐	☐
Vitamins	☐	☐	☐
Special foods for infants or persons on special diets	☐	☐	☐
Cookies, hard candy	☐	☐	☐
Instant coffee	☐	☐	☐
Cereals	☐	☐	☐
Powdered milk	☐	☐	☐

Clothes and Bedding Supplies

Item	
Complete change of clothes	☐
Sturdy shoes or boots	☐
Rain gear	☐
Hat and gloves	☐
Extra socks	☐
Extra underwear	☐
Thermal underwear	☐
Sunglasses	☐
Blankets/sleeping bags and pillows	☐

Documents and Keys

Item	Stored
Personal identification	☐
Cash and coins	☐
Credit cards	☐
Extra set of house keys and car keys	☐
Copies of the following:	☐
Birth certificate	☐
Marriage certificate	☐
Driver's license	☐
Social Security cards	☐
Passports	☐
Wills	☐
Deeds	☐
Inventory of household goods	☐
Insurance papers	☐
Immunization records	☐
Bank and credit card account numbers	☐
Stocks and bonds	☐
Emergency contact list and phone numbers	☐
Map of the area and phone numbers of places you could go	☐

http://www.ready.gov/kit

https://www.fema.gov/media-library-data/20130726-1549-20490-9451/appendix_b.pdf

APPENDIX 3

EKU BUILDING KEY
BULK MATERIAL CONTAINER AND CONTAINMENT DETAILS
CHEMICAL STORAGE BUILDING MAINTENANCE MANUAL
CHEMICAL STORAGE BUILDING DRAWING
CHEMICAL STORAGE BUILDING ELECTRICAL
ACADEMIC CHEMICALS INVENTORY
FACILITIES SERVICES CHEMICAL LIST
COAL BIN CAPACITY LETTER

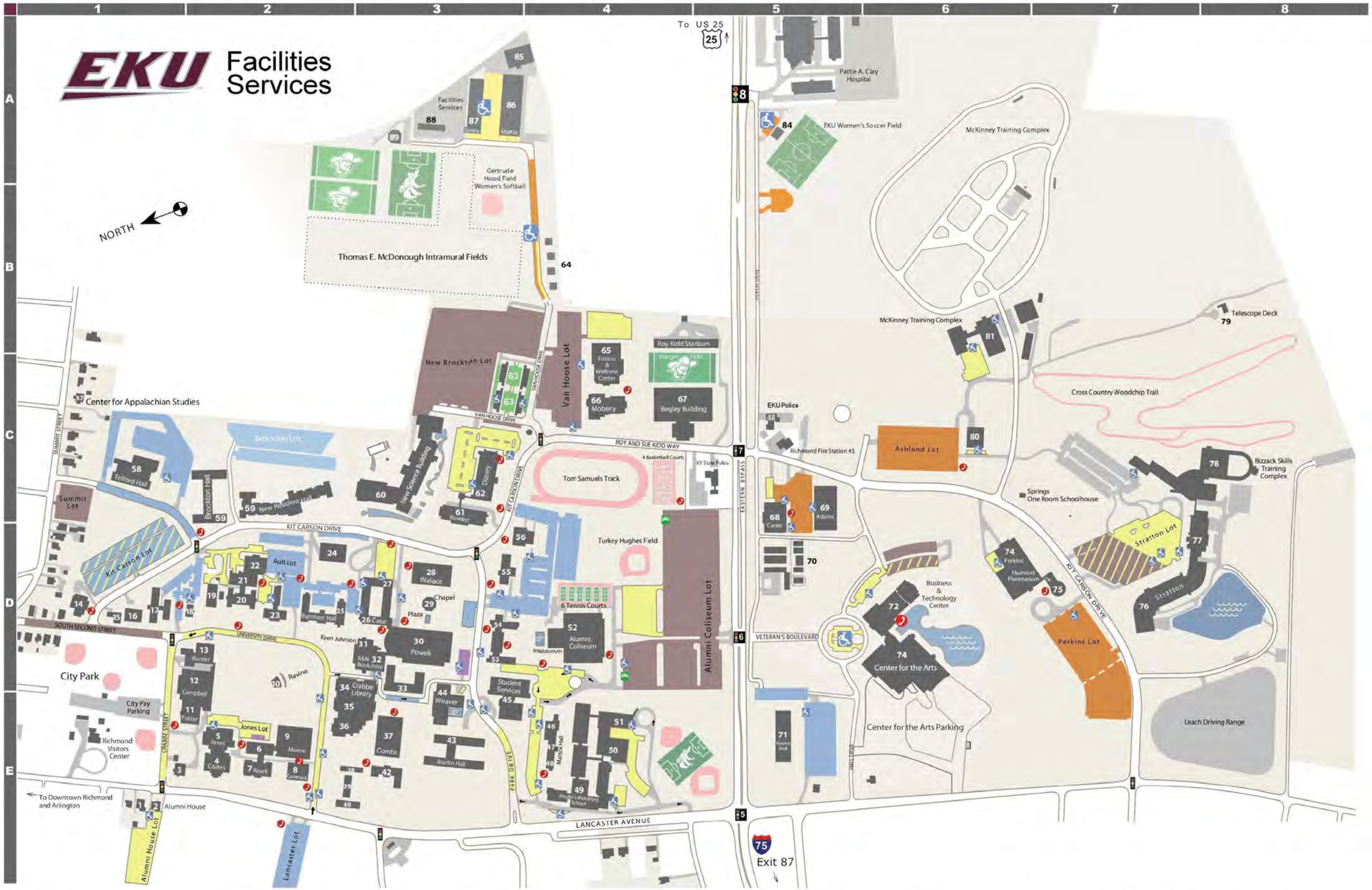

69. Adams Building - C5
52. Alumni Coliseum - D4
2. Alumni House - E1
80. Ashland, Inc. Building - C6
21. Ault Building - D2
73. B & T Center, Phase II (forthcoming) - D6
14. Baptist Student Center - D1
32. Barnes & Noble Bookstore - D3
39. Beckham Hall - E2
67. Begley Building - C4
78. Bizzack Skills Training Complex - C7, C8
86. Black Building - A3
3. Blanton House - E1

59. Brockton Hall - C2
25. Burnham Hall - D2
13. Burrier Building - D2
72. Business & Technology Center - D6
8. Cammack Building - E2
12. Campbell Building - D2
68. Carter Building - C5
26. Case Annex - D3
27. Case Hall - D3
16. Catholic Newman Center - D1
57. Center for Appalachian Studies - C1
74. Center for the Arts - D6
29. Chapel of Meditation - D3

24. Clay Hall - D2
4. Coates Building - E2
37. Combs Classroom Building - E3
56. Commonwealth Hall - D3
34. Crabbe Library - D2, D3 E2, E3
62. Dizney Building - C3
51. Donovan Annex - E4
49. Donovan Building - E4
54. Dupree Hall - D3
65. Fitness & Wellness Center - C4
20. Fitzpatrick Building - D2
11. Foster Music Building - E2

77. Funderburk Building - D7
83. Gabbard Building - A3
85. Gentry Building - A3
22. Gibson Building - D2
70. Greenhouses - D5
75. Hummel Planetarium - D7
5. Jones Building - E2
50. Kearns Gymnasium - E4
31. Keen Johnson Building - D3
71. Keene Hall - E5
42. Keith Building - E3
35. Little Building - E2, E3

84. Martin Building - A3
43. Martin Hall - E3
46. Mattox Hall - E4
40. McCreary Hall - E2
33. McGregor Hall - D3
81. McKinney Training Complex - B6
6. Memorial Science Building - E2
15. Methodist Student Center - D1
38. Miller Hall - E2
1. Million House - E1
66. Moberly Building - C4
9. Moore Building - E2

59. New Residence Hall - C2
60. New Science Building - C3
55. Palmer Hall - D3
47. Parking Office - E4
74. Perkins Building - D6
48. Police Department - E4
30. Powell Building - D3
87. Presnell Building - A3
19. Ramsey Building - D2
7. Roark Building - E2
61. Rowlett Building - C3
63. Scholar House - B3, C3
76. Stratton Building - D7

45. Student Services Building - D3, E3
23. Sullivan Hall - D2
79. Telescope Deck - B8
58. Telford Hall - C1
53. Todd Hall - D3
18. Turley House - D2
36. University Building - E2
64. Van Hoose Drive Houses - B4
10. Van Peursem Pavilion - D2
28. Wallace Building - D3
17. Walters Hall - D1
44. Weaver Building - E3
82. Women's Soccer Field - A5

Appendix 3.2

Bulk Material Container and Containment Details

																	Storage Tank Data				Containment Data					Spill Potential			
Building Key Number	Location	Description or Use (X) Transformer (G) Generator (FP) Fire Protection (UST) Underground Storage Tank	KVA	Primary Voltage	Secondary Voltage	Manufacturer	Serial or Model Number	Contents or Oil Type	Volume (Gal)	Qty	"Bulk" Container subject to SPCC Y/N	"Operational" subject to SPCC Y/N	Subject to Integrity Testing Y/N	STI-SP001 Integrity Category	STI-SP001 Integrity Testing Schedule	Last Tested	Year Installed	Inside/Outside	Storage Container Details	Storage Tank Label Y/N	Containment Security	Secondary Containment Required Y/N	Secondary Containment Volume (Gal)	Secondary Containment TYPE Details	Secondary Containment DRAIN Details	Maximum Predicted Flow (Gal/Min)	Spill Direction	Spill Potential - Mechanical	Spill Potential - Natural
69	Adams	X	150	12,470	208	Niagara	51821	Silicone	149	1	N	Y	N				1990	O	$A_1,F_1,D_2,G_1,M_1,Out,W_1,Y_2,Z_1$	Y	G_2,L	N	NA	XXX	NA	7	South	TR	T
SE of 51	Alumni Lighting 1 phase	X	167	12,470	120	Niagara	51816	Silicone	87	1	N	Y	N					O	$A_1,F_1,D_2,G_1,M_1,Out,W_1,Y_2,Z_1$	Y	G_2,L	N	NA	XXX	NA	4	West	TR	T
SE of 52	Alumni Lot Basketball	X	75	12,470	208	Square D	19320666-093-07	Mineral	93	1	N	Y	N				2005	O	$A_1,F_1,D_2,G_1,M_1,Out,W_1,Y_2,Z_1$	Y	G_2,L	N	NA	XXX	NA	5	South	TR	T
80	Ashland	X	750	12,470	480	Square D	2403512594	Mineral	363	1	N	Y	N					O	$A_1,F_1,D_2,G_1,M_1,Out,W_1,Y_2,Z_1$	Y	G_2	N	NA	XXX	NA	18	South	TR	T
SE of 69	Ashland Lot	X	75	12,470	208/120	Square D	19320666-093-02	Mineral	93	1	N	Y	N				2005	O	$A_1,F_1,D_2,G_1,M_1,Out,W_1,Y_2,Z_1$	Y	G_2	N	NA	XXX	NA	5	South	TR	T
north of 24	Ault Lot	X	167	12,470	240	Cooper	951069216	Mineral	62	1	N	Y	N				2005	O	$A_1,F_1,D_2,G_1,M_1,Out,W_1,Y_2,Z_1$	Y	G_2,L	N	NA	XXX	NA	3	East	TR	T
north of 67	Begley Field Lights	X	113	4,160	208	Square D	19320666-111-01	Mineral	258	1	N	Y	N				2005	O	$A_1,F_1,D_2,G_1,M_1,Out,W_1,Y_2,Z_1$	Y	G_2,L	N	NA	XXX	NA	13	West	TR	T
78	Bizzack	G	275KW			DFBF-4965129		Diesel	175	1	Y	N	Y	1	P			O	$A_1,F_1,D_1,G_1,M_1,Out,W_1,Y_2,Z_1$	Y	G_2,L	N	NA	XXX	NA	9	North	TR	T
86	Black	X	150	4160/ 12470	208/120	Cooper	337015684	Mineral	182	1	N	Y	N					O	$A_1,F_1,D_2,G_1,M_1,Out,W_1,Y_2,Z_1$	Y	G_2,G_3,L	N	NA	XXX	NA	9	West	TR	T
25	Burnam	X	150	4,160	208	Niagara	51855	Silicone	139	1	N	Y	N				1990	O	$A_1,F_1,D_2,G_1,M_1,Out,W_1,Y_2,Z_1$	Y	G_2,L	N	NA	XXX	NA	7	East	TR	T
13	Burrier	X	1000	12,470	208	Niagara	51850	Silicone	259	1	N	Y	N				1990	I	$A_1,F_1,D_2,G_1,In,M_1,W_1,Y_2,Z_1$	Y	G_2,FS	N	285	A_1,M_1,F,In	NA	13	NA	TR	NA
72	Business & Tech.	G	230KW			DFAB 230		Diesel	2000	1	Y	N	Y	1	P		2005	O	$A_1,F_1,D_1,G_1,M_1,Out,W_1,Y_2,Z_1$	Y	G_2,F,G_4,L	N	NA	XXX	NA	100	South	TR	T
at Kit Carson	Bypass Lights 1 phase	X	167	12,470	120	Niagara	51818	Silicone	87	1	N	Y	N					O	$A_1,F_1,D_2,G_1,M_1,Out,W_1,Y_2,Z_1$	Y	G_2,L	N	NA	XXX	NA	4	North	TR	T
12	Campbell	X	1000	12,470	480	Niagara	51849	Silicone	246	1	N	Y	N				1990	I	$A_1,F_1,D_2,G_1,In,M_1,W_1,Y_2,Z_1$	Y	G_2,FS	Y	271	A_1,M_1,F,In	NA	12	NA	TR	NA
12	Campbell	X	1000	12,470	208	Niagara	51848	Silicone	235	1	N	Y	N				1990	I	$A_1,F_1,D_2,G_1,In,M_1,W_1,Y_2,Z_1$	Y	G_2,FS	Y	259	A_1,M_1,F,In	NA	12	NA	TR	NA
68	Carter	X	225	12,470	208	T&R	021025-3	Mineral	125	1	N	Y	N					O	$A_1,F_1,D_2,G_1,M_1,Out,W_1,Y_2,Z_1$	Y	G_2,L	N	NA	XXX	NA	6	North	TR	T
70	Carter Greenhouse 1 phase	X	167	4,160	120	Square D	19320666-092-01	Mineral	106	1	N	Y	N				2005	O	$A_1,F_1,D_2,G_1,M_1,Out,W_1,Y_2,Z_1$	Y	G_2	N	NA	XXX	NA	5	East	TR	T
24	Clay	X	300	12,470	208	Niagara	51840	Silicone	149	1	N	Y	N				1990	I	$A_1,F_1,D_2,G_1,In,M_1,W_1,Y_2,Z_1$	Y	G_2,FS	Y	164	A_1,M_1,F,In	NA	7	NA	TR	NA
4	Coates	G	15 KW			15.ORJC-4R/14817AD		Diesel	500	1	Y	N	Y	1	P			O	$A_1,F_1,D_1,G_1,M_1,Out,W_1,Y_2,Z_1$	Y	G_2,L	N	NA	XXX	NA	25	North	TR	T
4	Coates	X	500	12,470	208	Niagara	51847	Silicone	183	1	N	Y	N				1990	I	$A_1,F_1,D_2,G_1,In,M_1,W_1,Y_2,Z_1$	Y	G_2,FS	Y	201	A_1,M_1,F,In	NA	9	NA	TR	NA
37	Combs Classroom	X	750	12,470	208	Niagara	51833	Silicone	220	1	N	Y	N				1990	I	$A_1,F_1,D_2,G_1,In,M_1,W_1,Y_2,Z_1$	Y	G_2,FS	Y	242	A_1,M_1,F,In	NA	11	NA	TR	NA
56	Commonwealth	X	750	12,470	208	Interstate	51833	Silicone	249	1	N	Y	N					I	$A_1,F_1,D_2,G_1,In,M_1,W_1,Y_2,Z_1$	Y	G_2,FS	Y	274	A_1,M_1,F,In	NA	12	NA	TR	NA
56	Commonwealth (shed)	FP						Diesel	150	1	Y	N	Y	1	P			I	$A_1,F_1,D_2,G_1,In,P_1,W_1,Y_1,Z_2$	Y	G_2	Y	165	A_1,M_2,F,In	P	8	NA	TR, FF	T
NW of 69	CRAFT	X	300	12470/ 7200	208/120	Solomon	107430	Mineral	135	1	N	Y	N				2010	O	$A_1,F_1,D_2,G_1,M_1,Out,W_1,Y_2,Z_1$	Y	G_2,L	N	NA	XXX	NA	7	East	TR	T
C2/D2	South Hall Lot	X	30	12,470	208/120	Square D	19320666-099-01	Mineral	89	1	N	Y	N				2005	O	$A_1,F_1,D_2,G_1,M_1,Out,W_1,Y_2,Z_1$	Y	G_2,L	N	NA	XXX	NA	4	North	TR	T
62	Dizney	X	750	12,470	208	GE	P800718TTE	Mineral	315	1	N	Y	N					O	$A_1,F_1,D_2,G_1,M_1,Out,W_1,Y_2,Z_1$	Y	G_2,L	N	NA	XXX	NA	16	North	TR	T
62	Dizney	G	100KW			3116		Diesel	65	1	Y	N	Y	1	P			I	$A_1,F_1,D_2,G_1,In,M_1,W_1,Y_2,Z_1$	Y	G_2,FS	Y	72	A_1,M_1,F,In	NA	3	NA	TR, FF	NA
81	DOCJT Firing Range	X	300	12,470	208	Square D	000685-VA	Mineral	243	1	N	Y	N					O	$A_1,F_1,D_2,G_1,M_1,Out,W_1,Y_2,Z_1$	Y	G_2	N	NA	XXX	NA	12	South	TR	T
81	DOCJT Simulator	X	300	12,470	208	Square D	1.53506E+12	Mineral	328	1	N	Y	N					O	$A_1,F_1,D_2,G_1,M_1,Out,W_1,Y_2,Z_1$	Y	G_2	N	NA	XXX	NA	16	North	TR	T
51	Donovan	X	500	12,470	208	Niagara	51829	Silicone	193	1	N	Y	N				1990	I	$A_1,F_1,D_2,G_1,In,M_1,W_1,Y_2,Z_1$	Y	G_2,FS	Y	212	A_1,M_1,F,In	NA	10	NA	TR	NA
54	Dupree	FP						Diesel	185	1	Y	N	Y	1	P			I	$A_1,F_1,D_2,G_1,In,P_1,W_1,Y_1,Z_2$	Y	G_2	Y	204	A_1,M_2,F,In	P	9	NA	TR, FF	NA
54	Dupree	X	500	12,470	208	Niagara	51836	Silicone	245	1	N	Y	N					I	$A_1,F_1,D_2,G_1,In,M_1,W_1,Y_2,Z_1$	Y	G_2,FS	Y	270	A_1,M_1,F,In	NA	12	NA	TR	NA
north of 69	Fire Station Lot	X	750	12,470	208/120	Square D	19320666-093-01	Mineral	93	1	N	Y	N				2005	O	$A_1,F_1,D_2,G_1,M_1,Out,W_1,Y_2,Z_1$	Y	G_2,L	N	NA	XXX	NA	5	South	TR	T
11	Foster	X	300	12,470	208	Square D	17764236-017-01	Mineral	271	1	N	Y	N					O	$A_1,F_1,D_2,G_1,M_1,Out,W_1,Y_2,Z_1$	Y	G_2,L	N	NA	XXX	NA	14	East	TR	T
77	Funderburk	G	30 KW			D35FRP4		Diesel	75	1	Y	N	Y	1	P			I	$A_1,F_1,D_2,G_1,In,M_1,W_1,Y_2,Z_1$	Y	G_2,FS	Y	83	A_1,M_1,In	NA	4	NA	TR, FF	NA
83	Gabbard	X	600	4,160	480208	Sorgel	X76506	Silicone	93	1	N	Y	N				2005	O	$A_1,F_1,D_2,G_1,M_1,Out,W_1,Y_2,Z_1$	Y	G_2,G_3,L	N	NA	XXX	NA	5	East	TR	T
85	Gentry	X	600	4,160	480208	Sorgel	X76506	Silicone	246	1	N	Y	N				2005	O	$A_1,F_1,D_2,G_1,M_1,Out,W_1,Y_2,Z_1$	Y	G_2,G_3,L	N	NA	XXX	NA	12	East	TR	T
SE of 69	Hall Drive Lights	X	167	12,470	240/120	Square D	18919264-007-01	Mineral	108	1	N	Y	N					O	$A_1,F_1,D_2,G_1,M_1,Out,W_1,Y_2,Z_1$	Y	G_2,L	N	NA	XXX	NA	5	East	TR	T
75	Hummel Planetarium	X	225	12,470	208	Niagara	51828	Silicone	146	1	N	Y	N				1990	O	$A_1,F_1,D_2,G_1,M_1,Out,W_1,Y_2,Z_1$	Y	G_2,L	N	161	M_1,C,Out	NA	7	South	TR	T
east of 57	Intramural Fields	X	75	4,160	208	GE	K855926T73AA	Silicone	93	1	N	Y	N				2005	O	$A_1,F_1,D_2,G_1,M_1,Out,W_1,Y_2,Z_1$	Y	G_2,L	N	NA	XXX	NA	5	North	TR	T
5	Jones	X	500	12,470	208	Niagara	51846	Silicone	200	1	N	Y	N				1990	I	$A_1,F_1,D_2,G_1,In,M_1,W_1,Y_2,Z_1$	Y	G_2,FS	Y	220	A_1,M_1,F,In	NA	10	NA	TR	NA
31	Keen Johnson	X	500	12,470	208	Niagara	51294	Silicone	214	1	N	Y	N					I	$A_1,F_1,D_2,G_1,In,M_1,W_1,Y_2,Z_1$	Y	G_2,FS	Y	235	A_1,M_1,F,In	NA	11	NA	TR	NA
71	Keene (shed)	FP						Diesel	120	1	Y	N	Y	1	P			I	$A_1,F_1,D_2,G_1,In,P_1,W_1,Y_1,Z_2$	Y	G_2	Y	132	A_1,M_2,F,In	P	6	NA	TR, FF	T
71	Keene	X	750	12,470	208	Niagara	51292	Silicone	260	1	N	Y	N					I	$A_1,F_1,D_2,G_1,In,M_1,W_1,Y_2,Z_1$	Y	G_2,FS	Y	286	A_1,M_1,F,In	NA	13	NA	TR	NA
west of 76	Leach Driving Range	X	150	12,470	480	Niagara	43889	Mineral	182	1	N	Y	N					O	$A_1,F_1,D_2,G_1,M_1,Out,W_1,Y_2,Z_1$	Y	G_2,L	N	NA	XXX	NA	9	South	TR	T

Appendix 3.2

Bulk Material Container and Containment Details

																	Storage Tank Data				Containment Data					Spill Potential			
Building Key Number	Location	Description or Use (X) Transformer (FP) Fire Protection (UST) Underground Storage Tank (G) Generator	KVA	Primary Voltage	Secondary Voltage	Manufacturer	Serial or Model Number	Contents or Oil Type	Volume (Gal)	Qty	"Bulk" Container subject to SPCC Y/N	"Operational" subject to SPCC Y/N	Subject to Integrity Testing Y/N	STI-SP001 Integrity Category	STI-SP001 Integrity Testing Schedule	Last Tested	Year Installed	Inside/Outside	Storage Container Details	Storage Tank Label Y/N	Containment Security	Secondary Containment Required Y/N	Secondary Containment Volume (Gal)	Secondary Containment TYPE Details	Secondary Containment DRAIN Details	Maximum Predicted Flow (Gal/Min)	Spill Direction	Spill Potential - Mechanical	Spill Potential - Natural
47	Mattox	G	225			Onan		Diesel	6	1	Y	N	Y	1	P			I	$A_1,F_1,D_2,G_1,In,M_1,W_1,Y_1,Z_2$	Y	G_2,FS	N	NA	F,In	NA	0	NA	TR, FF	NA
north of 47	Mattox Lot	X	225	12,470	208	Niagara	51828	Mineral	102	1	N	Y	N					O	$A_1,F_1,D_2,G_1,M_1,Out,W_1,Y_2,Z_1$	Y	G_2,L	N	NA	XXX	NA	5	North	TR	T
33	McGregor (shed)	FP						Diesel	120	1	Y	N	Y	1	P			I	$A_1,F_1,D_2,G_1,In,P_1,W_1,Y_1,Z_2$	Y	G_2	Y	132	A_1,M_2,F,In	P	6	NA	TR, FF	T
33	McGregor	X	500	12,470	208	Square D	214853	Silicone	214	1	N	Y	N					I	$A_1,F_1,D_2,G_1,In,M_1,W_1,Y_2,Z_1$	Y	G_2,FS	Y	NA	F,In	NA	11	NA	TR	NA
81	McKinney Simulator	G	35 KW			DGGD-5568413		Diesel	340	1	Y	N	Y	1	P			O	$A_1,F_1,D_1,G_1,M_1,Out,W_1,Y_2,Z_1$	Y	G_2	N	NA	XXX	NA	17	North	TR	T
38-40	Miller/McCreary/Beckham	X	300	12,470	208	B&B	95017F	Mineral	145	1	N	Y	N					O	$A_1,F_1,D_2,G_1,M_1,Out,W_1,Y_2,Z_1$	Y	G_2,L	N	NA	XXX	NA	7	West	TR	T
north of 67	Moberly	G	40 KW			WD6-LL 2014B		Diesel	147	1	Y	N	Y	1	P			O	$A_1,F_1,D_1,G_1,M_1,Out,W_1,Y_2,Z_1$	Y	G_2,L	N	NA	XXX	NA	7	South	TR	T
66	Moberly	X	500	12,470	208	Square D	980180-VA	Mineral	381	1	N	Y	N					O	$A_1,F_1,D_2,G_1,M_1,Out,W_1,Y_2,Z_1$	Y	G_2,L	N	NA	XXX	NA	19	South	TR	T
9	Moore	X	1000	12,470	208	Niagara	51850	Silicone	250	1	N	Y	N				1990	I	$A_1,F_1,D_2,G_1,In,M_1,W_1,Y_2,Z_1$	Y	G_2,FS	Y	275	A_1,M_1,F,In	NA	13	NA	TR	NA
60	New Science Building	G	1500KW			Cummins	DQGAB-7638624	Diesel	2500	1	Y	N	Y	1	P		2011	I	$A_1,F_1,D_1,G_1,M_1,In,W_1,Y_1,Z_1$	Y	G_2,F,G_4,L	N	NA	XXX	NA	125	North	TR	T
55	Palmer	X	500	12,470	208	Niagara	51837	Silicone	192	1	N	Y	N				1990	I	$A_1,F_1,D_2,G_1,In,M_1,W_1,Y_2,Z_1$	Y	G_2,FS	Y	211	A_1,M_1,F,In	NA	10	NA	TR	NA
74	Performing Arts	G	300 KW			Cummins	DQHAB-2308029	Diesel	550	1	Y	N	Y	1	P		2011	I	$A_1,F_1,D_1,G_1,M_1,In,W_1,Y_1,Z_1$	Y	G_2,F,G_4,L	N	NA	XXX	NA	28	South	TR	T
30	Powell	G	200KW			6CTAA83G3		Diesel	366	1	Y	N	Y	1	P			O	$A_1,F_1,D_1,G_1,M_1,Out,W_1,Y_2,Z_1$	Y	G_2,L	N	NA	XXX	NA	18	North	TR	T
30	Powell 750 KVA 1	X	750	12,470	208	Niagara	51835	Silicone	249	1	N	Y	N				1990	I	$A_1,F_1,D_2,G_1,In,M_1,W_1,Y_2,Z_1$	Y	G_2,FS	Y	274	A_1,M_1,F,In	NA	12	NA	TR	NA
30	Powell 750 KVA 2	X	750	12,470	208	Niagara	51293	Silicone	260	1	N	Y	N				1990	I	$A_1,F_1,D_2,G_1,In,M_1,W_1,Y_2,Z_1$	Y	G_2,FS	Y	286	A_1,M_1,F,In	NA	13	NA	TR	NA
87	Presnell	X	75	4,160	208	GE	K855926T73AA	Silicone	102	1	N	Y	N				2005	O	$A_1,F_1,D_2,G_1,M_1,Out,W_1,Y_2,Z_1$	Y	G_2,G_3,L	N	NA	XXX	NA	5	North	TR	T
19	Ramsey	G	335KW			M05L06910903		Diesel	600	1	Y	N	Y	1	P			O	$A_1,F_1,D_1,G_1,M_1,Out,W_1,Y_2,Z_1$	Y	G_2,L	N	NA	XXX	NA	30	South	TR	T
19	Ramsey Courtyard	X	300	12,470	208	ABB	985626213	Mineral	246	1	N	Y	N				2005	O	$A_1,F_1,D_2,G_1,M_1,Out,W_1,Y_2,Z_1$	Y	G_2,L	N	NA	XXX	NA	12	East	TR	T
19	Ramsey Front	X	300	12,470	208	ABB	985626213	Mineral	285	1	N	Y	N				2005	O	$A_1,F_1,D_2,G_1,M_1,Out,W_1,Y_2,Z_1$	Y	G_2,L	N	NA	XXX	NA	14	North	TR	T
7	Roark	X	500	12,470	208	Niagara	51842	Silicone	233	1	N	Y	N				1990	I	$A_1,F_1,D_2,G_1,In,M_1,W_1,Y_2,Z_1$	Y	G_2,FS	Y	256	A_1,M_1,F,In	NA	12	NA	TR	NA
81	Sayre	G	35 KW			DGBB-4965065		Diesel	145	1	Y	N	Y	1	P			O	$A_1,F_1,D_2,G_1,M_1,Out,W_1,Y_2,Z_1$	Y	G_2	N	NA	XXX	NA	7	South	TR	T
east of 74	Schoolhouse	X	75	4,160	208	GE	K855926T73AA	Silicone	87	1	N	Y	N					O	$A_1,F_1,D_2,G_1,M_1,Out,W_1,Y_2,Z_1$	Y	G_2	N	NA	XXX	NA	4	East	TR	T
C3/C4	Smith Observatory 1 phase	X	25	4,160	120	LineMaterial	G42L8607	Mineral	76	1	N	Y	N				2005	O	$A_1,F_1,D_2,G_1,M_1,Out,W_1,Y_2,Z_1$	Y	G_2,L	N	NA	XXX	NA	4	North	TR	T
A3/B3	Softball North	X	750	12,470	480/277	ABB	08J136137	Mineral	279	1	N	Y	N				2009	O	$A_1,F_1,D_2,G_1,M_1,Out,W_1,Y_2,Z_1$	Y	G_2	N	NA	XXX	NA	14	North	TR	T
B3/B4	Softball South	X	75	12,470	208/120	Square D	19320666-110-01	Mineral	93	1	N	Y	N				2005	O	$A_1,F_1,D_2,G_1,M_1,Out,W_1,Y_2,Z_1$	Y	G_2,L	N	NA	XXX	NA	5	East	TR	T
59	South Hall	X	95	12,470	480/277	Square D	31692723-002-01	Mineral	93	1	N	Y	N				2013	O	$A_1,F_1,D_2,G_1,M_1,Out,W_1,Y_2,Z_1$	Y	G_2,L	N	NA	XXX	NA	5	North	TR	T
23	Sullivan	X	150	4,160	240	12470	19320666-094-03	Mineral	102	1	N	Y	N					O	$A_1,F_1,D_2,G_1,M_1,Out,W_1,Y_2,Z_1$	Y	G_2,L	N	NA	XXX	NA	5	East	TR	T
NW of 58	Summit Lot	X	93	12,470	208/120	Square D	19320666-093-06	Mineral	93	1	N	Y	N				2005	O	$A_1,F_1,D_2,G_1,M_1,Out,W_1,Y_2,Z_1$	Y	G_2,L	N	NA	XXX	NA	5	South	TR	T
58	Telford	X	750	12,470	480	Niagara	51853	Silicone	213	1	N	Y	N					I	$A_1,F_1,D_2,G_1,In,M_1,W_1,Y_2,Z_1$	Y	G_2,FS	Y	234	A_1,M_1,F,In	NA	11	NA	TR	NA
58	Telford	X	1500	12,470	480	Niagara	51854	Silicone	252	1	N	Y	N				1990	I	$A_1,F_1,D_2,G_1,In,M_1,W_1,Y_2,Z_1$	Y	G_2,FS	Y	277	A_1,M_1,F,In	NA	13	NA	TR	NA
58	Telford	FP						Diesel	185	1	Y	N	Y	1	P			I	$A_1,F_1,D_2,G_1,In,P_1,W_1,Y_1,Z_2$	Y	G_2	Y	204	A_1,M_2,F,In	P	9	NA	TR, FF	NA
53	Todd	X	500	12,470	208	Niagara	51296	Silicone	214	1	N	Y	N					I	$A_1,F_1,D_2,G_1,In,M_1,W_1,Y_2,Z_1$	Y	G_2,FS	Y	235	A_1,M_1,F,In	NA	11	NA	TR	NA
C4	Track East 3 phase	X	150	4,160	240	Square D	19320666-094-05	Mineral	102	1	N	Y	N					O	$A_1,F_1,D_2,G_1,M_1,Out,W_1,Y_2,Z_1$	Y	G_2,L	N	NA	XXX	NA	5	East	TR	T
C4	Track West 3 phase	X	150	4,160	240	Square D	19320666-094-02	Mineral	102	1	N	Y	N					O	$A_1,F_1,D_2,G_1,M_1,Out,W_1,Y_2,Z_1$	Y	G_2,L	N	NA	XXX	NA	5	West	TR	T
D1/D2	Turley House	X	75	12,470	240/120	Square D	19320666-091-01	Mineral	88	1	N	Y	N				2005	O	$A_1,F_1,D_2,G_1,M_1,Out,W_1,Y_2,Z_1$	Y	G_2,L	N	NA	XXX	NA	4	East	TR	T
B4	Van Hoose 01 02	X	50	2,400	240	Sorgel	X76512-2	Silicone	75	1	N	Y	N				2005	O	$A_1,F_1,D_2,G_1,M_1,Out,W_1,Y_2,Z_1$	Y	G_2	N	NA	XXX	NA	4	East	TR	T
B4	Van Hoose 03 04	X	167	2,400	240	Niagara	51817	Silicone	87	1	N	Y	N					O	$A_1,F_1,D_2,G_1,M_1,Out,W_1,Y_2,Z_1$	Y	G_2	N	NA	XXX	NA	4	East	TR	T
D2/E2	Van Peursem Pavilion	X	225	12,470	208/120	Square D	19320666-095-02	Mineral	139	1	N	Y	N				2005	O	$A_1,F_1,D_2,G_1,M_1,Out,W_1,Y_2,Z_1$	Y	G_2,L	N	NA	XXX	NA	7	West	TR	T
28	Wallace	X	1500	12,470	480	Niagara	51820	Silicone	252	1	N	Y	N				1990	I	$A_1,F_1,D_2,G_1,In,M_1,W_1,Y_2,Z_1$	Y	G_2,FS	Y	277	A_1,M_1,F,In	NA	13	NA	TR	NA
44	Weaver	X	150	12,470	208	ABB	98J628085	Mineral	194	1	N	Y	N					O	$A_1,F_1,D_2,G_1,M_1,Out,W_1,Y_2,Z_1$	Y	G_2,L	N	NA	XXX	NA	10	East	TR	T
45	Whitlock Building	G	100KW			Onan		Diesel	300	1	Y	N	Y	1	P			I	$A_1,F_1,D_1,G_1,In,M_1,W_1,Y_1,Z_1$	Y	G_2,FS	N	NA	F,In	NA	15	NA	TR, FF	NA
Other																													
19	Ramsey Chemsearch 10600	Tote						boiler treatment & oxygen scavenger	330	1	N	N	N				NA	I	A_1,F_1,D_2,G,In	Y	G_2,G_4	N	NA	M_2,F,In,P	V_2	17	NA	TR, FF	NA

Appendix 3.2

Bulk Material Container and Containment Details

																	Storage Tank Data				Containment Data					Spill Potential			
Building Key Number	Location	Description or Use (X) Transformer (G) Generator (FP) Fire Protection (UST) Underground Storage Tank	KVA	Primary Voltage	Secondary Voltage	Manufacturer	Serial or Model Number	Contents or Oil Type	Volume (Gal)	Qty	"Bulk" Container subject to SPCC Y/N	"Operational" subject to SPCC Y/N	Subject to Integrity Testing Y/N	STI-SP001 Integrity Category	STI-SP001 Integrity Testing Schedule	Last Tested	Year Installed	Inside/Outside	Storage Container Details	Storage Tank Label Y/N	Containment Security	Secondary Containment Required Y/N	Secondary Containment Volume (Gal)	Secondary Containment TYPE Details	Secondary Containment DRAIN Details	Maximum Predicted Flow (Gal/Min)	Spill Direction	Spill Potential - Mechanical	Spill Potential - Natural
19	Ramsey Chemsearch 444	Tote						corrosion inhibitor	330	1	N	N	N				NA	I	A_1,F_1,D_2,G,In	Y	G_2,G_4	N	NA	M_2,F,In,P	V_2	17	NA	TR, FF	NA
19	Ramsey Chemsearch 140	Tote						magnesium; alkalinity	330	1	N	N	N				NA	I	A_1,F_1,D_2,G,In	Y	G_2,G_4	N	NA	M_2,F,In,P	V_2	17	NA	TR, FF	NA
33	McGregor 1026076	UST						Diesel	300	1			Y			Jul-10	1980	O	$U,C,F_2,D_1,M1,W_2,Y_1,V_1,P_2$	NA	G_2,L	N	NA	Out,A_2	NA	15	NA	TR,PF,FF	NA
86	Black	Drum						Used Oil	55	1	Y	N	N	1	P	NA	NA	I	A1-55 gal drum	Y	$G_2,G_3,L,Inside$	Y	55	C,F,In	NA	55	NA	TR,FF	T
86	Black	Drum						Misc. Oil	55	8	Y	N	N	1	P	NA	NA	I	A1-55 gal drum	Y	$G_2,G_3,L,Inside$	Y	55	C,F,In	NA	55	NA	TR,FF	T
86	Black	Tote						Used Veg Oil	220	2	Y	N	N	1	P	NA	NA	I	A1- plastic tote	Y	$G_2,G_3,L,Inside$	Y	220	C,F,In	NA	220	NA	TR,FF	T
86	Black	Tote						Fltrd Veg Oil	220	2	Y	N	N	1	P	NA	NA	I	A1- plastic tote	Y	$G_2,G_3,L,Inside$	Y	220	C,F,In	NA	220	NA	TR,FF	T
86	Black	AST						Diesel	1,000	1	Y	N	Y	1	P	Oct-10	2010	O	$A_2,F_1,D_1,M_1,OUT,Y_1,Z_1$	Y	G_2,G_3,L	Y	1000	A_2,M_2,Out	P	50	East	TR,PF,FF	T
86	Black	AST						Gasoline	600	1	Y	N	Y	1	P			O	$A_2,F_1,D_1,M_1,OUT,O_{1,2},Y_1,Z_2$	Y	G_2,G_3,L	Y	1000	A_2,M_1,Out	NA	30	East	TR,PF,FF	T
86	Black	AST						Gasoline	600	1	Y	N	Y	1	P			O	$A_2,F_1,D_1,M_1,OUT,O_{1,2},Y_1,Z_2$	Y	G_2,G_3,L	Y	600	A_2,M_1,Out	NA	30	East	TR,PF,FF	T
east of 69	Fire Station	AST						Diesel	1,000	1	Y	N	Y	1	P	Oct-10	2010	O	$A_2,F_1,D_1,M_1,OUT,O_2,V_1,Y_1,Z_1$	Y	G_2,L	Y	1000	A_2,M_2,Out	P	50	South	TR,PF,FF	T
9	Moore	Haz Waste						Haz Waste	55	1	N	N	N				NA	I	$A_1,F_1,D1,In,M2,W_1,Y_2,Z_1$	Y	G_2,FS,M_3	N	NA	In,F,S	NA	3	NA	TR,FF	NA
68	Carter	Haz Waste						Haz Waste	55	1	N	N	N				NA	I	A_1,F_1,D_1,In,M-varies$,W_1,Y_2,Z_1$	Y	G_2,FS,M_3	N	NA	In,F	NA	3	NA	TR,FF	NA
9	Moore 419	Solvent Drums						95% Ethanol	55	1	N	N	N				NA	I	$A_1,F_1,D1,In,M2,W_1,Y_2,Z_1$	Y	G_2,FS,M_3	N	22	In,F	NA	3	NA	TR,FF	NA
9	Moore 419	Solvent Drums						Isopropanol	55	1	N	N	N				NA	I	$A_1,F_1,D1,In,M2,W_1,Y_2,Z_1$	Y	G_2,FS,M_3	N	22	In,F	NA	3	NA	TR,FF	NA
60	NSB 3185A	Solvent Drums						95% Ethanol	55	1	N	N	N				NA	I	$A_1,F_1,D1,In,M2,W_1,Y_2,Z_1$	Y	G_2,FS,M_3	N	22	In,F	NA	3	NA	TR,FF	NA
60	NSB 3185A	Solvent Drums						Hexanes	55	1	N	N	N				NA	I	$A_1,F_1,D1,In,M2,W_1,Y_2,Z_1$	Y	G_2,FS,M_3	N	22	In,F	NA	3	NA	TR,FF	NA
60	NSB 3185A	Solvent Drums						Methanol	55	2	N	N	N				NA	I	$A_1,F_1,D1,In,M2,W_1,Y_2,Z_1$	Y	G_2,FS,M_3	N	22	In,F	NA	3	NA	TR,FF	NA
60	NSB 3185A	Solvent Drums						Acetone	55	1	N	N	N				NA	I	A1,F1,D1,In, M2,W1,Y2,Z1	Y	G2,FS,M3	N	22	In,F	NA	3	NA	TR,FF	NA

Storage Container Details	
Ax	Above Ground Storage Tank (x=1 single wall, x =2 double wall)
C	Cathodic protection
Fx	x=1 top fill hatch, x=2 fill tube, x=3 bottom fill
Dx	x=1 pump discharge, x=2 gravity discharge, x=3 pressurized tank discharge
Gx	x=1 sight gage, x=2 manual dip stick
H	Heating Coil
In	Indoor
Lx	x=1 tank leak detection, x=2 interstitial space detector, x=3 dike leak
Mx	Material: x=1 steel, x=2 plastic, x=3 fiberglass, x=4 other
NL	No Label
Out	Outdoors
Ox	x=1 automatic overfill alarm, x=2 audible alarm, x=3 visual alarm
Px	x=1 above ground pipe, x=2 underground pipe, x=3 double wall piping
R	Rail Tanker
T	Tanker or portable container
U	Underground Storage Tank
Vx	x=1 lock on fill valve, x=2 lock on drain valves, x=3 valves but no locks
V3	Valve - no lock
Wx	x=1 single wall, x=2 double wall
Yx	x=1 horizontal, x=2 vertical
Zx	x=1 on ground, x=2 supported above ground

Containment Security	
G_1	Guard Service
G_2	Company Security
F	Container Fence
G_3	Gates
G_4	Locked Gates
L	Lighting
H	Horns or Alarms
FS	Fire Sprinkler System
K	Keypad or card entry
P	Picture Card ID Entry
M_1	Fire or heat detectors
M_2	LEL vapor monitors
M_3	Smoke detectors
M_4	Motion Detection
M_5	Containment Spill Sensor
M_6	Window Break alarm
M_7	Toxic Gas monitors
C	Cameras (CCTV)

Integrity Testing Schedule			
Size (gals)	Category 1	Category 2	Category 3
0-1100	P	P	P, E & L (10)
1101-5000	P	P, E & L(10)	P, E&L(5), I(10) or P, L(2), E(5)
5,001-30,000	P, E(20)	P, E(10), I(20) or P, E(5), L(10)	P, E&L(5), I(10) or P, L(1), E(5)
30,001-50,000	P, E(20)	P, E & L(5), I(15)	P, E & L(5), I(10)
Portable	P	P	P

Category 1 - ASTs with spill control, and with CRDM
Category 2 - ASTs with spill control and without CRDM
Category 3 - ASTs without spill control and without CRDM
P – Periodic AST inspection
E – Formal external inspection by certified inspector
I – Formal internal inspection by certified inspector
L – leak test by owner or owner's designee
( ) indicates maximum inspection interval in years
CDRM - Continuouse Release Detection Method

Secondary Containment TYPE Details	
Ax	x=1 dike, x=2 double wall tank
Mx	x=1 concrete, x=2 steel, x=3 block, x=4 earth, x=5 plastic
B	Berm or swale
C	Curb or gutter
F	Floor or continuous pad surface
In	Inside or sheltered from rain
Out	Outside
OWS	Oil water separator
P	Pond or Retention Basin
R	Unloading Rack
S	Spill Pallet
T	Rail or Tanker unloading dike
V	Vault
XXX	No containment

Secondary Containment DRAIN Details	
Vx	x=1 gate valve, x=2 ball valve, x=3 globe valve
L	Lock
OWS	Oil water separator
P	Pipe plug or cap
Sw	Sump without pump
Sa	Sump with automatic pump
Sm	Sump with manual pump
NA	No drain
XXX	No valve, no lock

Spill Potential - Mechanical	
TR	Tank Rupture
DF	Dike Failure
PF	Pipe/Pump Failure
FF	Filling Failure
NP	No Procedure

Spill Potential - Natural	
T	Tornado/Weather
FP	Flood Plain
E	Earthquake Zone
N	Neighbor Risk
F	Fire/Forest/Brush

CHEMloc

FIREloc

SUPERloc

TURFloc

Building Manual
& Maintenance Schedule

FM APPROVED

Listed to FM 6049

TRA Certification
Quality Systems Registrar

UL components
Working for a safer world

*Download additional copies of this Building Manual at:

http://www.uschemicalstorage.com/support/

username: safetyfirst
password: uschem

Phone (800) 233-1480 Fax (800) 295-1653 web site
http://www.uschemicalstorage.com

®®

U.S. CHEMICAL storage

Thank you for purchasing your haz-mat storage building from US Chemical Storage®!

US Chemical Storage ® buildings are professionally engineered and audited for quality assurance and carry the approval from **FACTORY MUTUAL** and **WARNOCK HERSEY**. This assures that you you can achieve compliance with environmental laws and will attain a safe and non-polluting work place for the storage of hazardous materials and waste. Only premium grade materials are used in construction of US Chemical Storage ® buildings to ensure that your building will meet or exceed environmental standards set forth by OSHA, EPA, NFPA and the federal government..

US Chemical Storage ® buildings are designed for use as separate detached structures for indoor or outdoor use. They are intended for the storage of Class I, II, and III Flammable/Combustible liquids or hazardous materials and wastes.

US Chemical Storage ® buildings may require a building permit or an approval from the "Authorities Having Jurisdiction." ***It is the responsibility of the purchaser to ensure that all needed approvals are obtained and that the installations of these buildings are in accordance with the local codes and regulations.***

The "Authority Having Jurisdiction" has the final responsibility to ensure that the building's design is applicable for its intended use and the proper installation procedure, including location of the buildings; footings and tie-downs are in compliance with the appropriate codes and standards.

SHIPPING & DELIVERY

Your building will arrive via flatbed truck and can be off loaded with a crane or forklift. Keep in mind that most of the trucks are approximately 40' feet long and will need room to maneuver at your site.

Your building will arrive on a flatbed truck…

All buildings are thoroughly inspected and photographed at the factory prior to shipping, and after placement on the truck.

It is very important that you inspect your building immediately. If there are any damages or discrepancies with your order, they must be clearly noted on your carrier's Bill of Lading.

It is your responsibility to arrange for your forklift and/or crane to offload your building.

FREIGHT BILL OF LADING - NOT NEGOTIABLE

IMPORTANT

DESCRIPTION OF ARTICLES

US CHEMICAL storage®

FM

REPORT EXCEPTIONS NOW !!!

INSPECT YOUR BUILDING NOW! Any damages or discrepancies with this order must be clearly noted on the carrier's Bill of Lading at time of delivery. If any damage or discrepancy is noted, contact US Chemical Storage IMMEDIATELY at (800) 233-1480.

US Chemical Storage or their Representatives will not entertain any claim for damage or discrepancy and you assume total responsibility if noted clearly noted on Bill of Lading.

IMPORTANT: Your building will arrive with a sticker informing you to inspect your building and note any damages to your building on the carrier's
Bill of Lading. Inspect your shipment immediately!

DIAGRAM OF SAMPLE BUILDING

Your chemical storage building will be equipped with components listed in the above diagram. This diagram is not reflective of any electrical or fire suppression accessories that you may have ordered. You will receive an approval drawing like the following illustration showing the exact layout of your building. Make sure to approve and sign your copy and fax back to US Chemical Storage ® so we can begin production of your building.

SAMPLE APPROVAL DRAWING

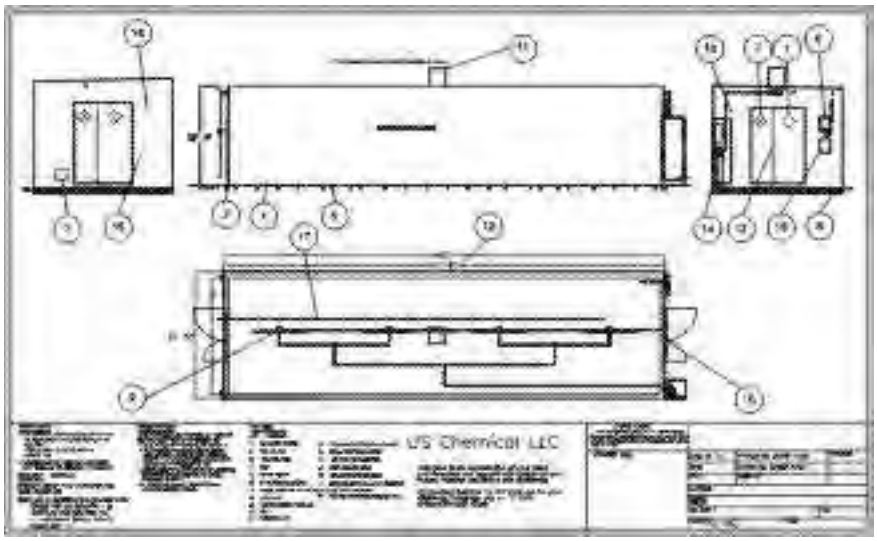

(continued next page for TURFloc™)

Standard Door Locations *(unless otherwise specified)*

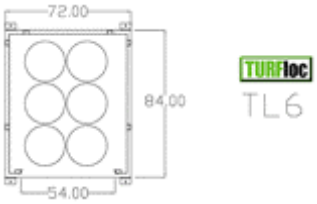

(DISCONTINUED – TL6)

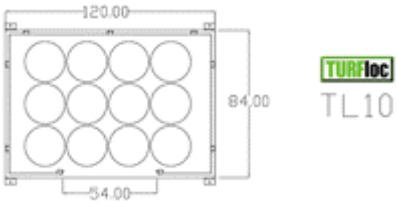

(8 X 10)

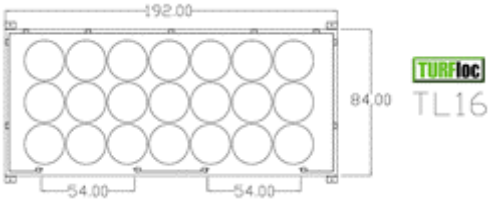

(8 X 16)

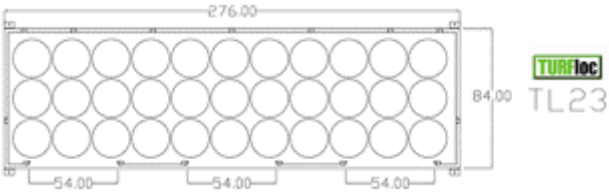

(UPGRADED TO TL24 (8X 24)

PURCHASER RESPONSIBILITIES

- Building Permits and Site Location
- Any off-loading and placement of building(s)
- Crane off loading (spreader bars will be necessary) or forklift off-loading. Foundation design, concrete pad and site location for your US Chemical Storage ® freestanding building(s), loading ramps, electrical transformer (if required) for a complete installation
- Foundation design, construction and site preparation
- Removal of any packing material and tapes (e.g. closed and taped fire dampers, etc.)
- Arming and loading the dry chemical fire suppression system activation cartridge (if provided)
- The installation of the 10' long 5/8" diameter static electricity grounding rod and attachment of conductor (wire) from rod to the building grounding lug which is located on the side wall bottom corner of the building
- Electrical power connections, including but not limited to, electrical wiring, conduit, supports, knock down transformer with local disconnect switch. Building distribution panel is rated 120/240 VAC single phase for either 70 or 100-amp service unless otherwise ordered
- Remote wiring such as required for plant interfacing
- Field touch-up painting
- Final site inspection, if required, by local authorities
- Periodic maintenance

FM APPROVED

INTERTEK Warnock Hersey Listed to FM 6049

THIRD PARTY APPROVALS

US Chemical Storage ® buildings are designed for storage and dispensing flammable liquids as defined by NFPA 30. The approval is based on an evaluation of the buildings in accordance with the requirements of Class 6049 "Storage Buildings for Flammable and Combustible Liquids" and NFPA 30 the Flammable and Combustible Liquid Code.

The approval is also based on an initial manufacturing facilities audit to verify the manufacturer's ability to produce as designed and evaluate the quality assurance program.

Maintaining the Factory Mutual & Warnock Hersey Approvals and labeling privileges is contingent upon maintaining a strict quality assurance program and satisfactory field experience. FM conducts quarterly unannounced factory audits to inspect production and review the quality assurance program and documentation in great detail.

The Factory Mutual placard will be located on or near the front door. The Warnock Hersey placard will be located next to the electrical panel.

Other third party and state approvals available.

NOTE: *Please check your local fire code for location limits for your building.*

LEGEND

DOT– DEPARTMENT OF TRANSPORTATION FLIP CHART PLACARD
NF– NATIONAL FIRE PROTECTION ASSOCIATION 704 SIGN
HDA– HOLD DOWN ANGLE (QTY 4)
S– SUMP
SGC– STATIC GROUND CONNECTOR
NV– NATURAL VENTILATION WITH RAIN LOUVRE (QTY 2)
FP– FORKLIFT POCKETS
D– DOOR 54"W X 80"H (W/INTERIOR RELEASE SAFETY BAR)
F– FLOOR: GALVANIZED STEEL GRATING
BC– BUILDING COLOR: WHITE
LC– LOAD CENTER (240 VOLT/SINGLE PHASE)
IL– (NON–EXPLOSION PROOF) INTERIOR LIGHTING (1)
CS– CONTAINMENT SHELVING
I– INSULATION (R11) CEILING AND WALLS
H– (NON–EXPLOSION PROOF) BASEBOARD HEATER (1)
MV– (NON–EXPLOSION PROOF) MECHANICAL VENT
SW1–SWITCH (NON–EXPLOSION PROOF) LIGHT
SW2–SWITCH (NON–EXPLOSION PROOF) MECHANICAL VENT

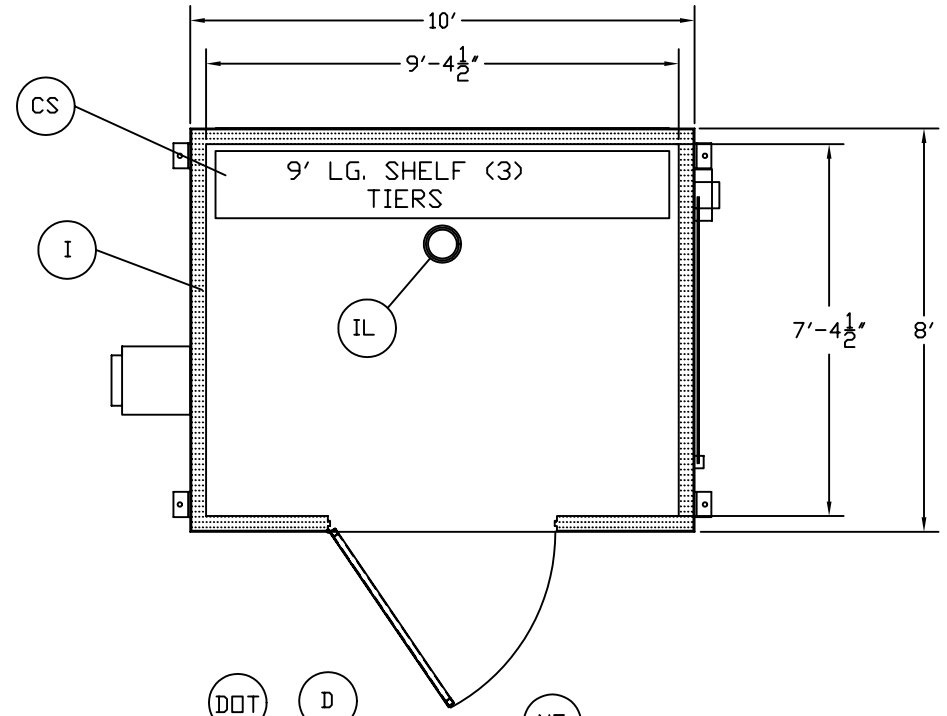

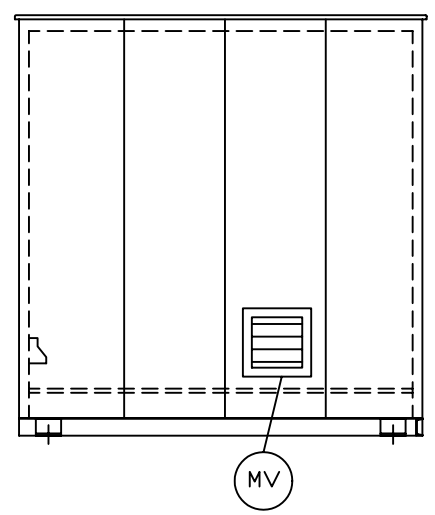

LEFT ENDWALL

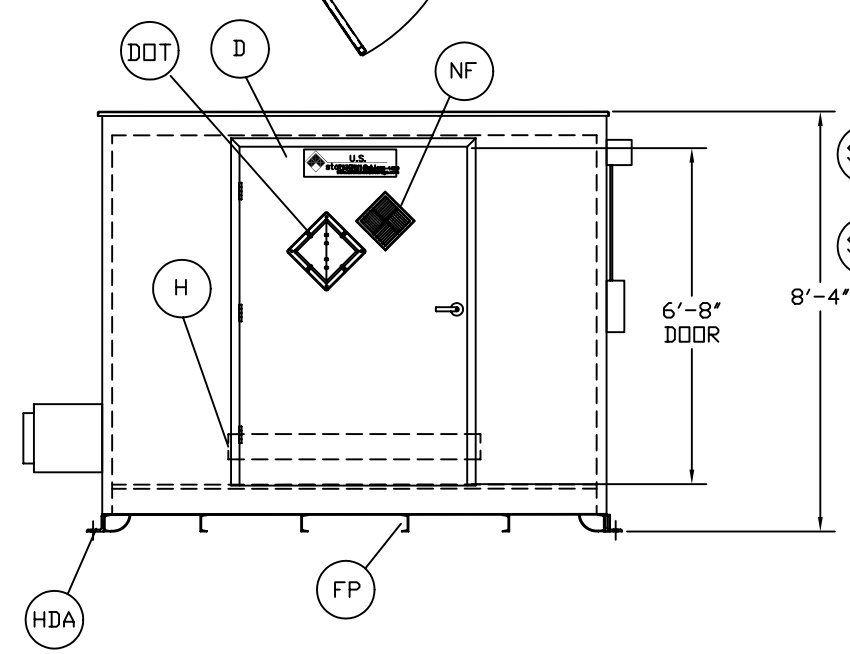

FRONT WALL

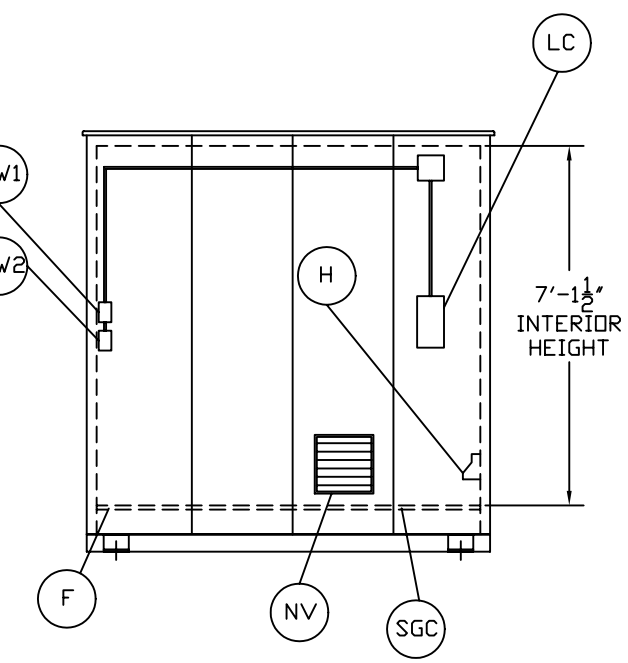

RIGHT ENDWALL

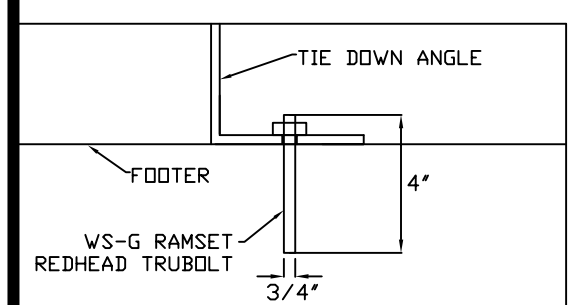

ANCHORAGE DETAIL

FOUNDATION DRAWING

REVISIONS				
BY	REV	DESCRIPTION	DATE	APPROVED
.	.	.	.	.

GENERAL NOTES:
1- ALL MATERIAL AND WORKMANSHIP SHALL CONFORM WITH THE REQUIREMENTS OF THE LATEST REVISION OF THE UBC 1997. DESIGN ACCORDING TO AISC, ASD, AND WITH ANSI/ ASCE 7-95.
2- NO LOADS OTHER THAN THOSE GIVEN UNDER "DESIGN DATA" BELOW SHALL BE IMPOSED ON THE "STUCTURE."
DESIGN DATA (MATERIALS)
STRUCTURAL QUALITY ASTM SPECIFICATION, A36 ER70S WELDING WIRE.
DESIGN DATA IN ACCORDANCE WTH ANSI/ ASCE 7-95:

MINIMUM ROOF LIVE LOAD (PSF) = 40
Pg: GROUND SNOW LOAD (PSF) = 50
V : WIND VELOCITY (MPH) = 90
SEISMIC ZONE = 4

FOUNDATION NOTES:
THE FOUNDATION DRAWING IS A *SUGGESTION* ONLY. CHANGES MAY BE NECESSARY DUE TO LOCAL BUILDING REGULATIONS AND SITE CONDITIONS.
1- THE PAD PERIMETER SHOULD BE AT LEAST 12" LARGER THAN THE BUILDING, BOTH IN LENGTH AND WIDTH.
2- THE FOUNDATION SHOULD BE FORMED ON NATURAL UNDESTRUBED SOIL CAPABLE OF SUBSTAINING 1,500 PSF.
3- GRANDUAL BASED GRAVEL OR CRUSHED STONE SHOULD BE COMPACTED TO A DEPTH OF 4" . THE SLAB SHOULD CONSIST OF 4" THICK 3,000 PSI CONCRETE.
4- FINISH SURFACE SHOULD BE LEVEL AND THEN INSTALL ⅞" X 4" ANCHOR BOLTS INTO THE TIE DOWNS ATTATCHED TO THE BUILDING CORNERS.

ALL DIMENSIONS SHOWN ON THIS PRINT ARE FOR YOUR REFERENCE. TOLERANCES ARE ±1" UNLESS OTHERWISE NOTED.

DATE: 9/11/07
DRAWN BY: CB

University of E.Kentucky
521 Lancaster Ave.
Richmond, KY 40475

MODEL NO. TL10
QUOTE NO. 30–4492
ORDER NO. 23262

APPROVAL PRINT

THIS PRINT IS CONFIRMATION OF YOUR ORDER AND ILLUSTRATES THE APPROXIMATE LOCATION OF FACTORY INSTALLED OPTIONS. CUSTOMER APPROVAL IS REQUIRED BEFORE MANUFACTURING CAN BEGIN.
ANY CHANGES MADE AFTER CUSTOMER APPROVAL MAY INCUR EXTRA CHARGES AND DELAY ESTIMATED DELIVERY.

SIGNATURE

PLEASE PRINT NAME DATE

LEGAL NOTE
THIS DRAWING IS THE PROPERTY OF U.S. CHEMICAL STORAGE, LLC. ANY DUPLICATION OF THIS DRAWING IN WHOLE OR IN PART IS STRICTLY FORBIDDEN. ANYONE DOING SO WILL BE PROSECUTED UNDER THE FULL EXTENT OF THE LAW.

APPROVED BY: NAEEM AHKTER
CHECKED BY: NAEEM AHKTER

U.S. CHEMICAL storage ®
CORPORATE OFFICE
355 Industrial Park Drive
Boone, NC 28607
PHONE: 1.800.233.1480
MANUFACTURING FACILITY
1806 River Road, Hwy 268 W.
Wilkesboro, NC 28697
PHONE: 1.888.583.9823
FAX: 1.336.838.0045

Appendix 3.4
Chemical Storage Building Drawing

ENGINEER'S SEAL

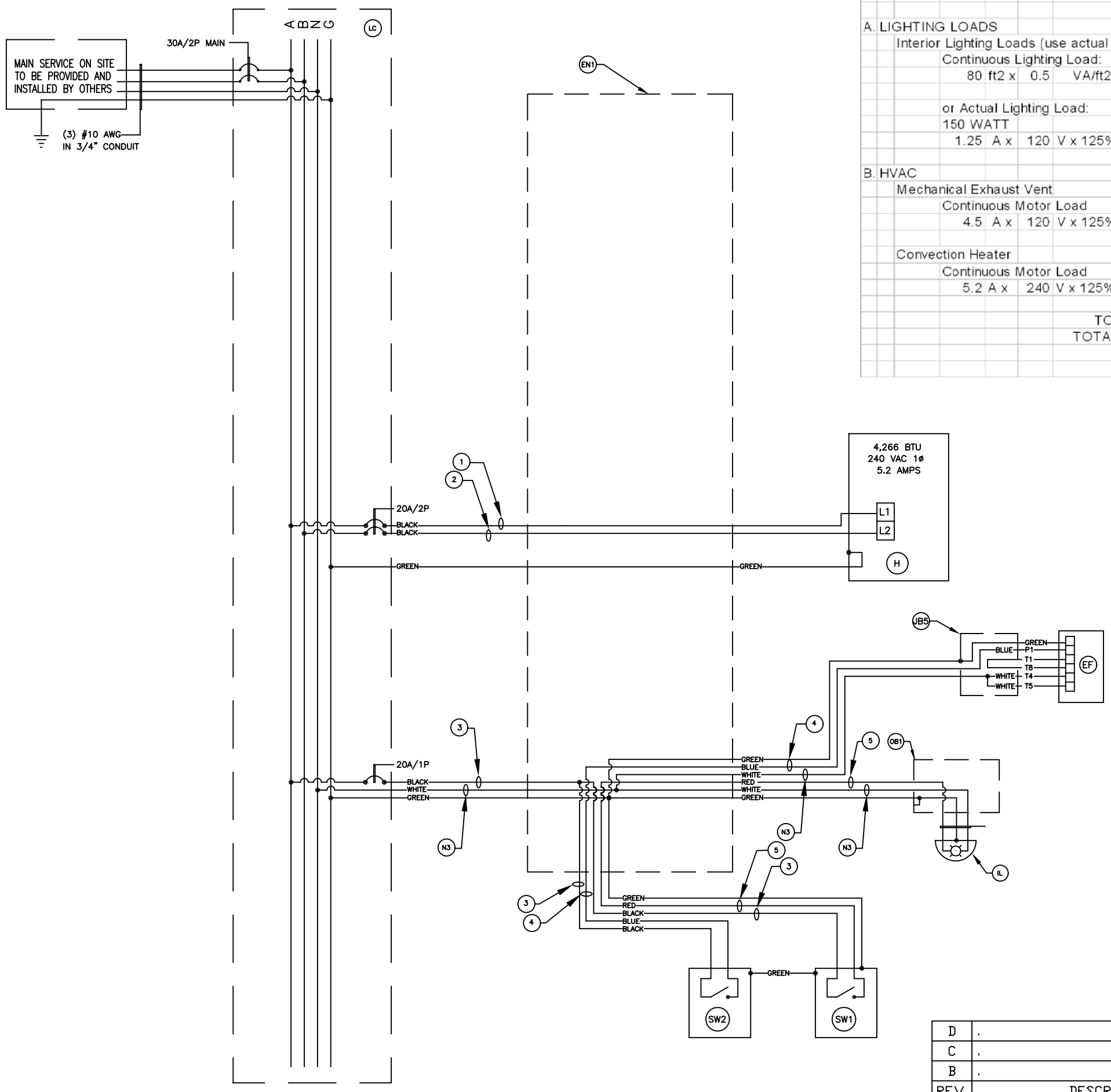

ELECTRICAL LOAD CALCULATION FORM:

BUILDING MODEL: SL1008
DATE: ########

A. LIGHTING LOADS

Interior Lighting Loads (use actual lighting load if greater than calculated load):

Continuous Lighting Load:
80 ft2 x 0.5 VA/ft2 = 40 VA

or Actual Lighting Load:
150 WATT
1.25 A x 120 V x 125% x 1 = 187.5 VA

B. HVAC

Mechanical Exhaust Vent
Continuous Motor Load
4.5 A x 120 V x 125% x 1 = 675 VA

Convection Heater
Continuous Motor Load
5.2 A x 240 V x 125% x 1 = 4500 VA

TOTAL VA = 5403 VA
TOTAL AMPS = 45.0 A

LEGEND

EQUIPMENT DESIGNATION	DESCRIPTION	REMARKS
LC	NEMA 3R CIRCUIT BREAKER LOAD CENTER 1 PHASE, 3 WIRE, 240VAC, 100 AMP	
OB1	OUTLET BODY	NON-EP LIGHTS
L1	LIGHT FIXTURE WITH 150W BULB	NON-EP
SW1	LIGHT SWITCH	NON-EP
JB5	JUNCTION BOX WITH 3/4" HUBS	
EF	EXHAUST FAN	NON-EP
SW2	FAN SWITCH	NON-EP
H	CONVECTION HEATER	NON-EP
EN1	6" X 6" X 4" NEMA 3R ENCLOSURE	

NOTES:
1. SERVICE TO BE 120/240 VAC 1 PHASE, BUILDING TO BE 120/240 VAC 1 PHASE,
2. UNLESS OTHERWISE NOTED:
   a) ALL WIRE TO BE 12 AWG THHN
   b) ALL CONDUIT TO BE 1/2"
3. ALL WIRING, FIXTURES AND EQUIPMENT IS TO BE LISTED OR LABELED.
4. THE BACKING, MOUNTING AND STRAPPING OF FIXTURES AND WIRING TO BE IN ACCORDANCE WITH THE NEC.
5. ALL ELECTRICAL HARDWARE IS NON-EP.

240 VAC 1 PHASE

NOTES: UNLESS OTHERWISE SPECIFIED;
1. ALL WIRE IS THHN INSULATED
2. ALL WIRE IS 12 AWG
3. ALL WIRE IN 1/2" CONDUIT

Appendix 3.5
Chemical Storage
Building Electrical

U.S. CHEMICAL STORAGE ®

CUSTOMER: *UNIVERSITY OF E. KENTUCKY*

TITLE: *ELECTRICAL SCHEMATIC MODEL TL10*

DRAWING NO. *30-4492 ELEC*

REV.	DESCRIPTION	BY	CHK BY	DATE
D	.	.		.
C	.	.		.
B	.	.		.

ACAD #: ELEC | PLOT SCALE: 1=1 | CHK BY: - | DRAWN BY: CX | ORDER NO. 30-4492 | DATE: 9/24/07 | SHEET 1 OF 1

Chemical Storage - NSB 3181

Material Name	CAS #	F. W. (g/mol)	Location	# of Cont.	Amount	Weight (lbs)	Physical State	CAT #	Company	Warnings	Unit Price ($)	GHS Symbols	Signal Word	Rec'd	Raman
Acenaphthenequinone	82-86-0	182.18	Row A Shelf 1	1	25 g	0.06	solid	1437	Lancaster	Irritant	0		Warning	9/24/2003	In library
Acenapthylene	208-96-8	152.2	Row A Shelf 1	1	5 g	0.01	solid	A805	Aldrich	Mildly Toxic	0		Warning	9/22/2003	In library
Acetamide	60-35-5	59.07	Row A Shelf 1	3	300g	0.66	solid	S25116	Fisher	Toxic	0		Danger	5/3/2016	In Library
Acetaminophen	103-90-2	151.16	Row A Shelf 1	1	20 g	0.04	solid	A5000-100G	Sigma	Mildly Toxic	0		Warning	10/17/2012	In Library
Acetanilide	103-84-4	135.17	Row A Shelf 1	1	400 g	0.88	solid	15081-5000	Acros	Toxic	0.1217		Warning	3/6/2014	Poor Spectra
Acetylsalicylic acid	50-78-2	180.16	Row A Shelf 1	1	100 g	0.22	solid	A-5376	Sigma	Irritant	0		Warning	unknown	In Library
Acrylamide	79-06-1	71.08	Row A Shelf 1	2	725 g	1.60	solid	A9099-25G	Sigma	Toxic	0		Danger	10/1/2012	In Library
Adenine (hemisulfate salt)	321-30-2	184.17	Shelf 1 Row A	1	5 g	0.01	solid	A-9126	Sigma	Nonhazardous	0		None	unknown	Added to Library
Adenine	73-24-5	135.1	Row A Shelf 1	1	1 g	0.00	solid	A8626	Sigma	Toxic	0		Danger	unknown	In Library
Adenine Hydrochloride	6055-72-7	171.6	Row A Shelf 1	1	2 g	0.00	solid	A-9795	Sigma	Nonhazardous			None	unknown	
b-Alanine	107-95-9	89.1	Row A Shelf 1	2	100 g	0.22	solid	3890	Canalco	Nonhazardous	0		None	unknown	Added to Library
dL-Alanine	302-72-7	89.09	Row A Shelf 2	1	30 g	0.07	solid	A381	Fisher	Nonhazardous	0		None	unknown	In Library
L-Alanine	56-41-7	89.09	Row A Shelf 2	1	16 g	0.03	solid	A26802	Aldrich	Nonhazardous	0		None	8/1/1999	In Library
L-Alanine	56-41-7	89.09	Row A Shelf 2	1	1 g	0.00	solid	A7627	Aldrich	Nonhazardous	0		None	Unknown	In Library
Alcian blue 8GX	33864-99-2	1298.86	Row A Shelf 2	1	20 g	0.04	solid	14091	Eastman	Nonhazardous	0		None	unknown	Poor Spectra
Alizarin	72-48-0	240.21	Row A Shelf 2	1	25 g	0.06	solid	A469	Baker	Irritant	0		Warning	unknown	Added to Library
Alizarin red S stain	130-22-3	36.28	Row A Shelf 2	1	100 g	0.22	solid	11996-2	Alrdrich	Irritant	0		Warning	5/1/1991	Poor Spectra
Alizarin yellow R	66676-71-9	309.21	Row A Shelf 2	1	25 g	0.06	solid	B205	MCB	Irritant	0		Warning	unknown	Poor Spectra
Aluminon	569-58-4	473.44	Row A Shelf 2	2	40 g	0.09	solid	A-546	Fisher	Nonhazardous	0		None	unknown	Poor Spectra
Alumina 8-14 mesh- Activated (without indicator)	1344-28-1	101.96	Row A Shelf 2	1	2500 g	5.51	solid	A505-212	Fisher	Nonhazardous	0		None	8/1/1991	Poor Spectra
Alumina 8-14 mesh- Activated (with indicator)	1344-28-1	101.96	Row A Shelf 3	1	1900 g	4.19	solid	old	MCB	Nonhazardous	0		None	unknown	Poor Spectra
Alumina Adsorption (80-200 Mesh)	1344-28-1	101.96	Row A Shelf 3	4	1850 g	4.07	solid	A540-500	Fisher	Nonhazardous	0		None	8/1/1989	Poor Spectra

Chemical Storage - NSB 3181

Material Name	CAS #	F. W. (g/mol)	Location	# of Cont.	Amount	Weight (lbs)	Physical State	CAT #	Company	Warnings	Unit Price ($)	GHS Symbols	Signal Word	Rec'd	Raman
Neutral Alumina (Brockmann activity 1)- Activated	1344-28-1	101.96	Row A Shelf 3	1	500 g	1.10	solid	19997-4	Sigma	Nonhazardous	0		None	unknown	Poor Spectra
Aluminum (8-20 mesh)	7429-90-5	26.98	Row A Shelf 3	9	5000 g	11.01	solid	456	J T Baker	Nonhazardous	0		None	unknown	Not Tested
Aluminum pellets	7429-90-5	26.98	Row A Shelf 4	2	600 g	1.32	solid	AX627	MCB	Nonhazardous	0		None	unknown	Not Tested
Aluminum Rods	7429-90-5	26.98	Row A Shelf 4	1	100 g	0.22	solid	old	old	Nonhazardous	0		None	unknown	Not Tested
Aluminum wire	7429-90-5	26.98	Row A Shelf 4	2	1000 g	2.20	solid	Old	Old	Nonhazardous	0		None	unknown	Not Tested
Aluminum ammonium sulfate	7784-26-1	453.3	Row A Shelf 4	1	2200 g	4.85	solid	A-567	Fisher	Irritant	0		Warning	unknown	In library
Aluminum hydroxide n-H2O	1330-44-5	78	Row A Shelf 4	1	400 g	0.88	solid	A-581	Fisher	Nonhazardous	0		Warning	unknown	Not Tested
Aluminum potassium sulfate dodecahydrate	7784-24-9	474.39	Row A Shelf 4	1	500 g	0.00	solid	S25152b	Fisher	Nonhazardous	0.036		None	2/9/2016	In Library
Amberlyst 15, dry	9037-24-5	n/a	Row A Shelf 5	1	25 g	0.06	solid	202140250	Acros	Toxic	0		Warning	unknown	Not Tested
2-Aminoethanethiol hydrochloride	156-57-0	113.61	Row A Shelf 5	1	25 g	0.06	solid	153770250	Acros	Mildly Toxic	0		Warning	1/7/2000	Poor Spectra
4-aminophenol	123-30-8	109.13	Row A Shelf 5	1	100 g	0.22	solid	104272500	Acros	Toxic	0		Danger	unknown	Not Tested
Ammonium acetate	631-61-8	77.08	Row A Shelf 5	1	1500 g	3.30	solid	A-637	Fisher	Nonhazardous	0		None	unknown	In Library
Ammonium acetate	631-61-8	77.08	Row A Shelf 5	1	300 g	0.66	solid	A-1542	Sigma	Nonhazardous	0		None	unknown	In Library
Ammonium bromide	12124-97-9	97.94	Row A Shelf 5	1	450 g	0.99	solid	0636	Baker	Nonhazardous	0		None	unknown	In Library
Ammonium carbonate	506-87-6	96.09	Row A Shelf 5	1	200 g	0.44	solid	A-656	Fisher	Irritant	0		None	unknown	In Library
Ammonium chloride ACS grade	12125-02-9	53.49	Row A Shelf 5	2	1200 g	2.64	solid	A661-500	Fisher	Irritant	0.04926		Warning	3/31/2014	In Library
Ammonium chloride reagent grade	12125-02-9	53.49	Row A Shelf 5	1	500 g	1.10	solid	S25168A	Fisher	Irritant	0.01636		Warning	2/17/2016	In Library
Ammonium chloride	12125-02-9	53.49	Row A Shelf 5	1	500 g	1.10	solid	A-0171	Sigma	Irritant	0.01636		Warning	Moore Move	In Library
Ammonium Formate	540-69-2	63.06	Row A Shelf 6	1	25 g	0.06	solid	70221-25G-F	sigma	Irritant	0		Warning	7/12/2010	Added to Library
Ammonium molybdate tetrahydrate	12027-67-7	1235.86	Row A Shelf 6	5	980 g	2.15	solid	A-674	Fisher	Nonhazardous	0.022122		None	unknown	In Library
Ammonium Oxalate Monohydrate	6009-70-7	142.11	Cabinet A Shelf 6	2	350 g	0.77	solid	A679-500	Fisher	Irritant	0.1033		Warning	2/3/2016	In Library
Ammonium phosphate monobasic	7722-76-1	115.03	Row A Shelf 6	5	1800 g	3.96	solid	A684	Fisher	Nonhazardous	0		None	unknown	In Library
Ammonium phosphate monobasic	7722-76-1	115.03	Row A Shelf 6	1	500g	1.10	solid	A1645-500	Sigma	Nonhazardous	0		None	Moore Move	In Library

Chemical Storage - NSB 3181

Material Name	CAS #	F. W. (g/mol)	Location	# of Cont.	Amount	Weight (lbs)	Physical State	CAT #	Company	Warnings	Unit Price ($)	GHS Symbols	Signal Word	Rec'd	Raman
Ammonium Sulfate	7783-20-2	132.14	Row A Shelf 6	2	1000 g	2.20	solid	A702-500	Fisher	Nonhazardous	0.08832		None	6/13/2014	In Library
Ammonium Sulfate	7783-20-2	132.14	Row A Shelf 6	1	500g	1.10	solid	A-4418	Sigma	Nonhazardous	0.08832		None	Moore Move	In Library
Ammonium thiocyanate	1762-95-4	76.12	Row A Shelf 6	2	149 g	0.33	solid	A-709	Fisher	Toxic	0		Warning	unknown	In Library
Ampicillin Salt	25389-94-0	582.6	Row A Shelf 6	5	25g	0.06	solid	21-6880	Carolina	Toxic			Danger	unknown	
8-anilino-1-naphthalenesulfonic acid ammonium	206659-00-9	316.38	Row A Shelf 6	1	25 g	0.06	solid	401221000	acros	Nonhazardous	0		None	11/7/2008	Poor Spectra
m-Anisaldehyde	591-31-1	136.15	Row A Shelf 6	1	15 g	0.03	liquid	129658-25G	Aldirich	Irritant	0		Warning	10/24/2013	In Library
p-Anisaldehyde	123-11-5	136.1	Row A Shelf 6	1	475 mL	1.05	liquid	A-0519	Sigma	Nonhazardous	0.1926		None	unknown	In Library
Anthracene	120-12-7	178.23	Row A Shelf 6	3	220 g	0.48	solid	2834	son Coleman a	Irritant	0		Warning	unknown	In Library
9-Anthraldehyde	642-31-9	206.24	Row A Shelf 7	1	40 g	0.09	solid	27,868-8	Aldrich	Nonhazardous	0		None	unknown	Poor Spectra
Anthrone	90-44-8	194.2	Row A Shelf 7	2	35 g	0.08	solid	A-1631	Sigma	Irritant	0		Warning	unknown	In library
Antimony metal	7440-36-0	121.76	Row A Shelf 7	1	453 g	1.00	solid	A-845	Fisher	Mildly Toxic	0		Warning	unknown	Not Tested
Antimony(III) Potassium Tartrate Hydrate	331753-56-1	613.83	Row A Shelf 7	1	50 g	0.11	solid	244791	Aldrich	Irritant	0.636		Warning	5/6/2015	Added to Library
D-(-)-Arabinose	10323-20-3	150.13	Row A Shelf 7	1	25 g	0.06	solid	old	JT Baker	Nonhazardous	0		None	unknown	In library
L-(+)-Arabinose	5328-37-0	150.3	Row A Shelf 7	2	50 g	0.11	solid	A883	Fisher	Nonhazardous	0		None	unknown	In library
L-(+)-Arginine	74-79-3	174.21	Row A Shelf 7	4	400 g	0.88	solid	1990	Eastman	Nonhazardous	0		None	unknown	In Library
L-Arginine Hydrochloride	1119-34-2	210.7	Row A Shelf 7	1	25 g	0.06	solid	A-3909	Sigma	Nonhazardous			None	unknown	
o-Arsanilic acid	2045-00-3	217.06	Row A Shelf 7	1	10 g	0.00	solid	16.062.57	Acros	Toxic	0		Danger	6/18/1996	Poor Spectra
p-Arsanilic acid	98-50-0	217.06	Row A Shelf 7	1	100 g	0.22	solid	40144-1000	Acros	Toxic	0		Danger	6/18/1996	Added to Library
L-Ascorbic acid	**50-81-7**	**176.12**	Row A Shelf 7	**1**	**225 g**	**0.50**	**solid**	**A7506-500G**	**Sigma**	**Nonhazardous**	**0.19678**		**None**	9/30/2013	In Library
DL-Asparagine	3130-87-8	150.13	Row A Shelf 8	1	25 g	0.06	solid	5694	Eastman	Nonhazardous	0		None	unknown	Added to Library
L-Asparagine monohydrate	5794-13-8	150.13	Row A Shelf 8	2	40 g	0.09	solid	A-912	Fisher	Nonhazardous	0		None	unknown	Added to Library
Aspartame	22839-47-0	294.3	Row A Shelf 8	1	48 g	0.11	solid	n/a	NuSc i	Nonhazardous	0		None	unknown	In Library

Chemical Storage - NSB 3181

Material Name	CAS #	F. W. (g/mol)	Location	# of Cont.	Amount	Weight (lbs)	Physical State	CAT #	Company	Warnings	Unit Price ($)	GHS Symbols	Signal Word	Rec'd	Raman
DL-Aspartic acid	617-45-8	133.1	Row A Shelf 8	1	25 g	0.06	solid	A-9006	Sigma	Nonhazardous	0		**None**	unknown	Poor Spectra
L-Aspartic acid	56-84-8	133.1	Row A Shelf 8	1	100 g	0.22	solid	0-1285	Fisher	Irritant	0		Warning	unknown	In Library
Atropine sulfate salt	5908-99-6	676.8	Row A Shelf 8	1	15 g	0.03	solid	A-0257	Sigma	Toxic	0		er	unknown	Added to Library
Azure II	37247-10-2	625.68	Row A Shelf 8	2	20 g	0.04	solid	old	MCB	Nonhazardous	0		None	unknown	Poor Spectra
Barium chloride dihydrate	10326-27-9	244.26	Row A Shelf 8	2	500 g	1.10	solid	B34-500	Fisher	Toxic	0.1566		Danger	4/24/2014	In Library
Barium diphenylaminesulfonate	6211-24-1	633.89	Row A Shelf 8	1	9 g	0.02	solid	40168-0100	Acros	Mildly Toxic	12.275		Warning	11/13/2007	In Library
Barium sulfate	7727-43-7	233.4	Row A Shelf 8	1	454g	1.00	solid	1030	J.T. Baker	Nonhazardous	0		None	unknown	In Library
Benedicts Solution	63126-89-6		Row A Shelf 8	1	450ml	0.99	liquid	S99605	Fisher	Irritant	0.05702		Warning	unknown	
Benzaldehyde	100-52-7	106.12	Row A Shelf 8	2	350 ml	0.77	liquid	30749	Alfa Aesar	Toxic	0.1263		Danger	3/2/2015	In Library
Benzil	134-81-6	210.23	Row A Shelf 9	2	350 g	0.77	solid	B515-1	Aldrich	Irritant	0.08544		Warning	unknown	
Benzoin	119-53-9	212.25	Row A Shelf 9	1	500 g	1.10	solid	B-271	Fisher	Nonhazardous	0		None	unknown	In Library
1-Benzoylacetone, 98%	93-91-4	162.19	Row A Shelf 9	1	50 g	0.11	solid	105690500	Acros	Nonhazardous	0		None	10/11/2007	Added to Library
Benzyl alcohol	100-51-6	108.41	Row A Shelf 9	1	380 mL	0.84	liquid	A-396	Fisher	Irritant	0		Warning	unknown	In Library
Benzyl Benzoate	120-51-4	212.2	Row A Shelf 9	1	1000 ml	2.20	liquid	B-6630	Sigma	Irritant	0		Warning	unknown	In Library
Bismuth lumps	7440-69-9	208.98	Row A Shelf 9	2	454 g	1.00	solid	BX800	MCB	Nonhazardous	0		None	unknown	Not Tested
Blue Dextran	87915-38-6	n/a	Row A Shelf 9	1	5 g	0.01	solid	D-5751	Sigma	Nonhazardous	0		None	unknown	Poor Spectra
Boileezers	1344-28-1	40.097	Row A Shelf 9	2	400 g	0.88	solid	B-365	Fisher	Nonhazardous	0		None	unknown	Not Tested
Boric acid	10043-35-3	61.84	Row A Shelf 10	2	850 g	1.87	solid	BX0870-1	EM Science	Toxic	0		Danger	10/20/1990	In Library
Boric acid	10043-35-3	61.84	Row A Shelf 10	1	450g	0.99	solid	B-7660	Sigma	Toxic	0		Danger	unknown	In Library
Brilliant Blue R	6104-58-1	854.02	Row A Shelf 10	1	0 g	0.00	solid	25,418-5	Aldrich	Nonhazardous	0		None	unknown	Poor Spectra
Brilliant green	633-03-4	482.63	Row A Shelf 10	1	10 g	0.02	solid	B250	MCB	Mildly Toxic	0		Warning	unknown	Poor Spectra
4-Bromoaniline	106-40-1	172.02	Row A Shelf 10	2	100 g	0.22	solid	A15126	Alfa Aesar	Toxic	0		Danger	6/18/2010	Poor Spectra

Chemical Storage - NSB 3181

Material Name	CAS #	F. W. (g/mol)	Location	# of Cont.	Amount	Weight (lbs)	Physical State	CAT #	Company	Warnings	Unit Price ($)	GHS Symbols	Signal Word	Rec'd	Raman
Bromocresol purple	115-40-2	540.22	Row A Shelf 10	1	10 g	0.02	solid	C949-2	Baker	Mildly Toxic	0		Warning	unknown	Poor Spectra
Bromophenol Blue	115-39-9	669.96	Row A Shelf 10	2	10 g	0.02	solid	B392	Fisher	Nonhazardous	0		None	unknown	Poor Spectra
Bromophenol red	2800-80-8	150.22	Row A Shelf 10	1	5 g	0.01	solid	unknown	Baker	Nonhazardous	0		None	unknown	Poor Spectra
Bromothymol blue indicator solution	76-59-5	624.38	Row A Shelf 10	1	1000 ml	2.20	liquid	S25207C	Fisher	Nonhazardous	0.02755		None	9/9/2014	Poor Spectra
Bromothymol blue	76-59-5	624.38	Row A Shelf 10	3	15 g	0.03	solid	B-388/ B-0128	Fisher/ Sigma	Nonhazardous	0		None	9/25/2014	Poor Spectra
Buffer Capsules pH 2	N/A	n/a	Row A Shelf 10	1	40 cap.	0.09	solid	270- pH 2.00	VWR	Nonhazardous	0		None	9/12/2012	Not Tested
Buffer capsules pH 3	N/A	n/a	Row A Shelf 10	2	96 cap.	0.20	solid	270- pH 3.00	VWR	Nonhazardous	0.5852		None	9/19/2001	Not Tested
Buffer capsules pH 4	N/A	n/a	Row A Shelf 11	3	60 cap.	0.20	solid	270- pH 4.00	VWR	Nonhazardous	0.5852		None	12/13/2002	Not Tested
Buffer capsules pH 5	N/A	n/a	Row A Shelf 11	2	100 cap.	0.54	solid	270- pH 5.00	VWR	Nonhazardous	0.5852		None	5/18/1995	Not Tested
Buffer capsules pH 6	N/A	n/a	Row A Shelf 11	2	90 cap.	0.17	solid	270- pH 6.00	VWR	Nonhazardous	0.5852		None	5/18/1995	Not Tested
Buffer capsules pH 7	N/A	n/a	Row A Shelf 11	1	30 cap.	0.10	solid	270- pH 7.00	VWR	Nonhazardous	0.5852		None	9/30/2003	Not Tested
Buffer capsules pH 8	N/A	n/a	Row A Shelf 11	2	87 cap.	0.15	solid	270- pH 8.00	VWR	Nonhazardous	0.5852		None	9/8/1998	Not Tested
Buffer capsules pH 9	N/A	n/a	Row A Shelf 11	2	67cap.	0.13	solid	270- pH 9.00	VWR	Nonhazardous	0.5852		None	unknown	Not Tested
Buffer capsules pH 10	N/A	n/a	Row A Shelf 11	2	84 cap.	0.29	solid	270- pH 10.00	VWR	Nonhazardous	0.5852		None	unknown	Not Tested
Buffer capsules pH 11	N/A	n/a	Row A Shelf 11	1	50 cap.	0.11	solid	270- pH 11.00	VWR	Nonhazardous	0.5852		None	8/22/2003	Not Tested
n-Butyl phthalate	84-74-2	278.35	Row A Shelf 12	1	3995 ml	8.81	liquid	D-30	Fisher	Toxic	0		Danger	unknown	In Library
Cacodylic Acid	75-60-5	138	Row A Shelf 12	1	15 g	0.03	solid	BP324-100	Fisher	Toxic	0		Danger	unknown	In library
Cacodylic Acid Sodium Salt	124-65-2	160	Row A Shelf 12	1	100 g	0.22	solid	C-0250	Sigma	Toxic	0		Danger	unknown	Added to Library
Cadium metal 100 mesh	7440-43-9	112.41	Row A Shelf 12	1	453 g	1.00	solid	Old	Old	Toxic	0		Danger	unknown	Not Tested
Cadmium sticks	7440-43-9	112.41	Row A Shelf 12	2	1700 g	3.74	solid	unknown	unknown	Toxic	0		Danger	unknown	Not Tested
Cadmium (II) acetate dihydrate	5743-04-4	266.53	Row A Shelf 12	1	450 g	0.99	solid	CB 232	MCB	Irritant	0.04495		Warning	unknown	Added to Library
Cadmium iodide	7790-80-9	366.21	Row A Shelf 12	1	454 g	1.00	solid	1218	Baker	Toxic	0		Danger	unknown	Poor Spectra

Chemical Storage - NSB 3181

Material Name	CAS #	F. W. (g/mol)	Location	# of Cont.	Amount	Weight (lbs)	Physical State	CAT #	Company	Warnings	Unit Price ($)	GHS Symbols	Signal Word	Rec'd	Raman
Cadmium sulfate	7790-84-3	769.51	Row A Shelf 12	1	400 g	0.88	solid	C-19	Fisher	Toxic	0		Danger	unknown	Added to Library
Caffeine	58-08-2	194.19	Row A Shelf 12	1	390 g	0.91	solid	1728 / 27600-25	Fisher / Sigma	Toxic	0		Danger	12/13/2010	In Library
Calcium carbonate	471-34-1	100.09	Row B Shelf 13	4	1500 g	3.30	solid	C64-500	Fisher	Irritant	0.15982		None	3/1/1990	In Library
Calcium Chloride	10043-52-4	100.98	Row B Shelf 13	1	73 g	0.18	solid	C4901-100G	Sigma	Irritant	0.722		Warning	12/9/2014	In Library
Calcium chloride anhydrous 4-20 mesh	10043-52-4	110.99	Row B Shelf 13	6	2175 g	4.79	solid	C-614	Fisher	Irritant	0		Warning	unknown	Poor Spectra
Calcium chloride dihydrate	10035-04-8	147.01	Row B Shelf 13	1	240g	0.53	solid	C-79	Fisher	Irritant	0.0862		Warning	1/24/2014	Poor Spectra
Calcium chloride dihydrate	10035-04-8	147.01	Row B Shelf 13	1	350g	0.77	solid	C-3881	Sigma	Irritant	0.0862		Warning	Unknown	Poor Spectra
Calcium phosphate dibasic	7757-93-9	136.06	Row B Shelf 13	1	454 g	1.00	solid	C-124	Fisher	Nonhazardous	0		None	unknown	In library
Calcium phosphate monobasic monohydrate	10031-30-8	252.07	Row B Shelf 13	1	454 g	1.00	solid	1426	Baker	Irritant	0		Warning	unknown	In library
Calcium sulfate anhydrous	7778-18-9	136.14	Row B Shelf 14	1	500 g	1.10	solid	1458	J T Baker	Nonhazardous	0		None	unknown	In Library
Calcium sulfate dihydrate	10101-41-4	172.17	Row B Shelf 14	2	750 g	1.65	solid	C-140	Fisher	Nonhazardous	0		None	unknown	In Library
Calmagite, pure	3147-14-6	358.38	Row B Shelf 14	1	3 g	0.01	solid	108170050	Acros	Irritant	0		Warning	10/4/2011	Not Tested
Calmagite Triethanolammonium salt	91698-30-5	507.56	Row B Shelf 14	1	1 g	0.00	solid	C6634	Sigma Aldrich	Irritant	0		Warning	10/4/2011	Not Tested
Carbon lampblack	1333-86-4	12.01	Row B Shelf 14	1	340 g	0.75	solid	C198-500	Fisher	Toxic	0		Warning	10/23/2001	Not Tested
Carbon tetrachloride	56-23-5	153.82	Row B Shelf 14	1	4000 ml	8.81	liquid	C-187	Fisher	Toxic	0		Danger	unknown	In Library
Carbon tetrachloride. HPLC	56-23-5	153.82	Row B Shelf 14	3	3000 ml	6.61	liquid	27065-2	Aldrich	Toxic	0		Danger	unknown	In Library
Carmine	1390-65-4	184.14	Row B Shelf 14	1	20g	0.04	solid	C579-25	Fisher	Nonhazardous			none	unknown	
Carminic Acid	1260-17-9	492.38	Row B Shelf 14	1	20 g	0.04	solid	A-93	Fisher	Nonhazardous	0		None	unknown	Poor Spectra
(S)-Carvone	2244-16-8	150.22	Row B Shelf 15	1	15 ml	0.03	liquid	43575-9	Aldrich	Nonhazardous	0		None	3/30/1995	In Library
Ceric ammonium sulfate	10378-47-9	632.55	Row B Shelf 15	1	500 g	1.10	solid	C-249	Fisher	Nonhazardous	0.667		Warning	unknown	In Library
Charcoal, Activated	7440-44-0	12.01	Row B Shelf 15	1	245 g	0.54	solid	242276-250g	sigma	None	0.2124		Warning	4/1/2014	Not Tested
Chloramphenicol	56-72-7	323.1	Row B Shelf 15	1	100g	0.22	solid	C-0378	Sigma	Toxic			DANGER	unknown	
p-Chlorobenzaldehyde	104-88-1	140.57	Row B Shelf 15	1	240 g	0.53	solid	150442500	Acros	Mildly Toxic	0.3745		Warning	8/3/2004	In Library

Chemical Storage - NSB 3181

Material Name	CAS #	F. W. (g/mol)	Location	# of Cont.	Amount	Weight (lbs)	Physical State	CAT #	Company	Warnings	Unit Price ($)	GHS Symbols	Signal Word	Rec'd	Raman
Chloroform HPLC Grade	67-66-3	119.38	Row B Shelf 15	2	3700 ml	8.15	liquid	C607-4	Fisher	Toxic	0.0164		Danger	3/23/2015	In Library
Chlorpromazine	69-09-0	355.3	Row B Shelf 15	1	5 g	0.01	solid	C-8138	Sigma	Toxic	0		Danger	8/22/1995	Added to Library
Cholesterol	57-88-5	386.67	Row B Shelf 15	3	130 g	0.29	solid	CX1530	MCB	Nonhazardous	0		None	unknown	Not Tested
Cholic acid	81-25-4	408.57	Row B Shelf 15	2	50 g	0.11	solid	C-1129	sigma	Nonhazardous	0		None	unknown	Poor Spectra
Chromium metal	7440-47-3	52.01	Row B Shelf 15	2	500 g	1.10	solid	C-317	Fisher	Toxic	0		Warning	unknown	Not Tested
Chromium (III) acetylacetone	21679-31-2	349.33	Row B Shelf 16	1	100 g	0.22	solid	20223-1	Aldrich	Mildly Toxic	0		Warning	7/4/1999	Added to Library
trans-Cinnamic acid	140-10-3	148.2	Row B Shelf 16	1	225 g	0.50	solid	C-6004	sigma	Irritant	0		Warning	unknown	In library
Citral	5392-40-5	152.24	Row B Shelf 16	1	100 mL	0.22	liquid	C8300-7	Aldrich	Irritant	0		Warning	10/21/1999	In Library
Citric acid anhydrous	77-92-9	192.3	Row B Shelf 16	5	2000 g	4.41	solid	A-940	Fisher	Irritant	0		Warning	unknown	In Library
Citric acid monohydrate	5949-29-1	210.14	Row B Shelf 16	1	1575 g	3.47	solid	A-104	Fisher	Irritant	0.04774		Warning	unknown	In Library
Clayton yellow	1829-00-1	695.73	Row B Shelf 16	1	60 g	0.13	solid	F779	J T Baker	Nonhazardous	0		None	unknown	Not Tested
Cobalt metal shot	7440-48-4	58.93	Row B Shelf 16	3	1000 g	2.20	solid	unknown	unknown	Toxic	0		Danger	unknown	Not Tested
Cobalt metal shot	7440-48-4	58.93	Row B Shelf 16	1	300 g	0.66	solid	CX1770	atheson Colem	Toxic	0		Danger	unknown	Not Tested
Cobalt (II) acetate tetrahydrate	6147-53-1	249.08	Row B Shelf 17	2	540 g	1.19	solid	40302-4	Aldrich	Toxic	0		Danger	unknown	Not Tested
Coomassie blue	6104-58-1	854.02	Row B Shelf 17	2	60 g	0.13	solid	B-0630	sigma	Nonhazardous	0		None	7/1/1985	Poor Spectra
Copper sheet	7440-50-8	63.54	Row B Shelf 17	3	1500 g	3.30	solid	C-425	Fisher	Nonhazardous	0		None	unknown	Not Tested
Copper granular 20-30 mesh	7440-50-8	63.54	Row B Shelf 17	1	2300 g	5.07	solid	1720	J T Baker	Nonhazardous	0		None	unknown	Not Tested
Copper shot	7440-50-8	63.54	Row B Shelf 17	1	100 g	0.22	solid	C-430	Fisher	Nonhazardous	0		None	unknown	Not Tested
Copper Powder	7440-50-8	63.54	Row B Shelf 17	1	400g	0.88	Solid	29,258-3	Aldrich	Nonhazardous			None	unknown	Not Tested
Copper bromide	7787-70-4	143.45	Row B Shelf 17	2	15 g	0.03	solid	25,418-5	Aldrich	Irritant	0		Warning	unknown	Poor Spectra
Copper (I) Iodide	7681-65-4	190.44	Row B Shelf 18	1	10 g	0.02	solid	21,555-4	Aldrich	Irritant	0		Warning	unknown	Poor Spectra
Coronene	191-07-1	300.38	Row B Shelf 18	2	1 g	0.00	solid	C84801-500MG	Aldrich	Nonhazardous	0		None	9/11/2003	Poor Spectra

Chemical Storage - NSB 3181

Material Name	CAS #	F. W. (g/mol)	Location	# of Cont.	Amount	Weight (lbs)	Physical State	CAT #	Company	Warnings	Unit Price ($)	GHS Symbols	Signal Word	Rec'd	Raman
Coumarin	91-64-5	164.1	Row B Shelf 18	1	50 g	0.11	solid	C-4261	Sigma	Toxic	0		Danger	unknown	In Library
Creatinine	60-27-5	113.12	Row B Shelf 18	1	25 g	0.06	0.066	C-524	Fisher	Nonhazardous	0		None	unknown	Added to Library
Cresol red sodium salt	62625-29-0	404.42	Row B Shelf 18	1	5 g	0.01	solid	C-593	Fisher	Nonhazardous	0		None	unknown	Poor Spectra
12-Crown-4	294-93-9	176.21	Row B Shelf 18	1	>1 mL	0.00	liquid	19,490-5	Aldrich	Toxic	0		Danger	unknown	Added to Library
15-Crown-5	33100-27-5	220.26	Row B Shelf 18	1	3 mL	0.01	liquid	18,883-2	Aldrich	Mildly Toxic	0		Warning	unknown	In Library
18-Crown-6	17455-13-9	264.32	Row B Shelf 18	1	1 g	0.00	liquid	274984-1g	Sigma	Irritant	0		Warning	unknown	In Library
Cupric acetate	6046-93-1	199.93	Row B Shelf 18	6	2975 g	6.55	solid	C437-500	Fisher	Mildly Toxic	0		Warning	8/1/1992	Poor Spectra
Cupric carbonate	1184-64-1	123.55	Row B Shelf 18	1	454 g	1.00	solid	1786	JT Baker	Mildly Toxic	0		Warning	unknown	Poor Spectra
Cupric oxide	1317-38-0	79.54	Row B Shelf 18	1	454 g	1.00	solid	1814	Baker	Nonhazardous	0		None	unknown	Poor Spectra
Cupric sulfide	1317-40-4	95.6	Row B Shelf 18	1	423 g	0.93	solid	C-105	Fisher	Nonhazardous	0		None	unknown	Poor Spectra
Cupric sulfate anhydrous	7758-98-7	159.6	Row B Shelf 19	2	970 g	2.14	solid	C495-500	Fisher	Warning	0		Danger	unknown	Poor Spectra
Cupric Sulfate pentahydrate	7758-99-8	249.68	Row B Shelf 19	2	3200 g	7.05	solid	3916	Mallinckrodt	Toxic	0		Danger	unknown	Poor Spectra
Copper Sulfate Pentahydrate 98% Pure	7758-99-8	249.68	Row B Shelf 19	3	2650 g	5.84	solid	197730010	Acros	Toxic	0.0688		Danger	1/12/2009	Poor Spectra
Cuprous oxide	1317-39-1	143.08	Row B Shelf 19	1	250 g	0.55	solid	1878	Baker	WARNING	0		Warning	unknown	Poor Spectra
Cyanocobalamin	68-19-9	1355.38	Row B Shelf 19	1	5 g	0.01	solid	405920010	Acros	Nonhazardous	0		None	4/7/2009	Added to Library
2-Cyanopyridine	100-70-9	104.11	Row B Shelf 19	1	75 mL	0.17	liquid	C9,460-2	Aldrich	Irritant	0		Warning	unknown	Added to Library
Cyclohexanol	108-93-0	100.16	Row B Shelf 19	1	2300 mL	5.07	liquid	147680025	Acros	Irritant	0.03368		Warning	8/21/2000	In Library
L (-) Cystine	56-89-3	240.3	Row B Shelf 20	1	100 g	0.22	solid	C-563	Fisher	Nonhazardous	0		None	unknown	In Library
Cytosine	71-30-7	111.1	Row B Shelf 20	1	1 g	0.00	solid	C3506	Sigma	Irritant	0		Warning	unknown	In Library
DEAE Sephadex A-50	39455-31-7	n/a	Row B Shelf 20	1	100 g	0.33	solid	A-50-120	Sigma	Nonhazardous	0		None	8/1/1993	Added to Library
Dehydrocholic acid	81-23-2	402.5	Row B Shelf 20	2	35 g	0.08	solid	D3750	Sigma	Nonhazardous	0		Warning	unknown	Poor Spectra
Deoxycholic acid	83-44-3	392.6	Row B Shelf 20	1	10 g	0.02	solid	D2510	Sigma	Irritant	0		Warning	unknown	In Library

Chemical Storage - NSB 3181

Material Name	CAS #	F. W. (g/mol)	Location	# of Cont.	Amount	Weight (lbs)	Physical State	CAT #	Company	Warnings	Unit Price ($)	GHS Symbols	Signal Word	Rec'd	Raman
Deoxycholic acid sodium salt	302-95-4	414.5	Row B Shelf 20	1	25 g	0.06	solid	D6750	Sigma	Irritant	0		Warning	unknown	Poor Spectra
Dextran	9004-54-0	124,000	Row B Shelf 20	1	50 g	0.11	solid	D4876	Sigma	Nonhazardous	0		None	unknown	Poor Spectra
Dextrose anhydrous	50-99-7	180.16	Row B Shelf 20	1	1810g	4.075	solid	S25295B	Fisher	Nonhazardous	0.0118		None	9/11/2015	In Library
Dextrose anhydrous	50-99-7	180.16	Row B Shelf 20	1	900g	1.982	solid	BP350-1	Fisher	Nonhazardous	0.0118		None	1/12/2001	In Library
1,8-Diaminonaphthalene	479-27-6	158.2	Row B Shelf 20	1	100 g	0.22	solid	D2,140-5	Aldrich	Toxic	0		Danger	unknown	Poor Spectra
o-Dianisidine	119-90-4	244.3	Row B Shelf 21	1	5 g	0.01	solid	D9143	Sigma	Toxic	0		Danger	unknown	In Library
trans-1,2-Dibenzoylethylene	959-28-4	236.27	Row B Shelf 21	1	25 g	0.06	solid	D3,320-9	Aldrich	Nonhazardous	0		None	8/23/2000	In Library
1,2-Dibromobenzene	583-53-9	235.91	Row B Shelf 21	1	2 mL	0.00	liquid	7395	Lancaster	Irritant	0		Warning	unknown	In Library
1,2-Dibromobutane	533-98-2	215.93	Row B Shelf 21	1	10 ml	0.02	liquid	25,232-8	Aldrich	Irritant	0.668		Warning	unknown	In Library
p-Dichlorobenzene	106-46-7	147.01	Row B Shelf 21	1	3000 g	6.61	solid	B-249	Fisher	Toxic	0		Warning	unknown	In Library
2,7-Dichlorofluorescein	76-54-0	180.16	Row B Shelf 21	5	15 g	0.03	solid	373	Eastman	Irritant	0		Warning	unknown	Poor Spectra
2,6-Dichloroindophenol sodium salt	620-45-1	290.1	Row B Shelf 21	2	10 g	0.02	solid	D-1878	Sigma	Nonhazardous	0		None	unknown	Poor Spectra
Diethylbenzylphosphonate	1080-32-6	228.23	Row B Shelf 21	3	250 ml	0.55	liquid	114171000	Acros	Irritant	0		Warning	7/7/2010	In library
3,4-Dimethoxybenzaldehyde	120-14-9	166.17	Row B Shelf 22	1	90 g	0.20	solid	143758	Aldrich	Irritant	0.2608		Warning	unknown	In library
2,6-Dimethoxyphenol	91-10-1	154.17	Row B Shelf 22	1	100 g	0.22	liquid	D135550-100G	Aldrich	Irritant	0		Warning	3/1/2010	In Library
4-Dimethylaminobenzaldehyde	100-10-7	149.19	Row B Shelf 22	1	40 g	0.09	solid	42363-000	Acros	Nonhazardous	0		None	2/5/2001	In Library
N,N-Dimethylaniline	121-69-7	121.18	Row B Shelf 22	1	900 ml	1.98	liquid	AC115920010	Acros	Toxic			DANGER	5/2/2016	
2,5-Dimethylbenzaldehyde	5779-94-2	134.1	Row B Shelf 22	1	20 ml	0.04	liquid	15,106-8	Aldrich	Nonhazardous	0		None	8/15/1996	In Library
2,5-Dimethylpyrazine	123-32-0	108.14	Row B Shelf 22	2	25 ml	0.06	liquid	D18,180-3	Aldrich	ammable/ Corrosiv	0		Warning	1/30/2002	In Library
3,5-Dimethylpyrazole	67-51-6	96.13	Row B Shelf 22	1	100 g	0.22	solid	D18,200-4	Aldrich	Irritant	0		Warning	2/12/1996	In Library
Dimethyl Sulfoxide (DMSO)	67-68-5	78.13	Row B Shelf 22	1	0	0.00	liquid	D4540	Sigma	Nonhazardous	0.4279		None	2/6/2015	In Library
Disodium ethylenediamine tetraacetate	6381-92-6	372.24	Row B Shelf 22	2	70 g	0.15	solid	S-311	Fisher	Irritant	0		None	unknown	In Library

Chemical Storage - NSB 3181

Material Name	CAS #	F. W. (g/mol)	Location	# of Cont.	Amount	Weight (lbs)	Physical State	CAT #	Company	Warnings	Unit Price ($)	GHS Symbols	Signal Word	Rec'd	Raman
3,5-dinitrosalicylic acid	609-99-4	228.12	Row B Shelf 22	1	50 g	0.11	solid	156441000	acros	Irritant	0.8571		Warning	4/1/2013	In Library
Diphenylacetylene	501-65-5	178.23	Row B Shelf 23	2	25 g	0.06	solid	117180250	Acros	Nonhazardous	0		None	unknown	In Library
Diphenylamine	122-39-4	169.23	Row B Shelf 23	1	400 g	0.88	solid	O-2611	Fisher	Toxic	0		Danger	unknown	In Library
p-diphenylamine-sulfonic acid sodium salt	6152-67-6	271.27	Row B Shelf 23	1	1 g	0.00	solid	42366-0050	Acros	Irritant	0		Warning	11/5/2008	In Library
Diphenyl Carbazone	538-62-5	240.27	Row B Shelf 23	1	8 g	0.02	solid	D86-10	Fisher	Nonhazardous	0		None	2/12/1996	Added to Library
3,5-Di-tert-buytl-2-hydroxybenzaldehyde	37942-07-7	234.34	Row B Shelf 23	1	5 g	0.01	solid	140414-5g	Sigma	Irritant	0		Warning	9/15/2008	In Library
2,6-di-tert-butyl-4-methylphenol	128-37-0	220.35	Row B Shelf 23	1	99 g	0.22	solid	B1378	Aldrich	Nonhazardous	0		None	11/6/2013	In Library
n-Dodecane	112-40-3	170.3	Row B Shelf 23	2	110 mL	0.24	liquid	31324	Alfa Aesar	Toxic	0.415		Danger	8/22/2013	Not Tested
Dowex 50W-X8	69011-20-7	n/a	Row B Shelf 23	4	1240 g	2.73	solid	1927	JT Baker	Irritant	0		Warning	unknown	Poor Spectra
Drierite with indicator	n/a	n/a	Row B Shelf 24	1	2770 g	6.10	solid	07-578-3B	Fisher	Toxic	0.02537		Danger	2/14/2014	Not Tested
Eriochrome black T	1787-61-7	461.38	Row B Shelf 24	1	74 g	0.16	solid	22836-1000	Acros	Nonhazardous	0.399		None	11/27/1995	Poor Spectra
Eosin Y	15086-94-9	647.89	Row B Shelf 24	1	10 g	0.02	solid	E-511	Fisher	Nonhazardous	0		None	unknown	Poor Spectra
Erioglaucine disodium salt	3844-45-9	792.85	Row B Shelf 24	5	110 g	0.24	solid	229730250	acros	Nonhazardous	0.399		None	unknown	Poor Spectra
Erythrosin B	16423-68-0	879.86	Row B Shelf 24	1	15 g	0.03	solid	E-513	Fisher	Nonhazardous	0		None	unknown	Poor Spectra
Ethanolamine Hydrochloride	2002-24-6	97.54	Cabinet B Shelf 1	1	50 g	0.11	solid	E-6133	Sigma	Irritant	0		Danger	unknown	In Library
2-ethoxybenzaldehyde	613-69-4	150.17	Row B Shelf 24	1	60 g	0.13	liquid	153729-25G	Aldrich	Irritant	2.126		Warning	2/29/2016	In Library
Ethyl 4-aminobenzoate	94-09-7	165.19	Row B Shelf 24	1	100 g	0.22	solid	15078-1000	Acros	Nonhazardous	0		Warning	8/27/1996	In Library
Ethylenediaminetetraacetatic acid	60-00-4	292.25	Row C Shelf 25	1	340 g	0.75	solid	E-478	Fisher	Irritant	0		Warning	unknown	In Library
Ethylenediaminetetraacetatic acid disodium dihy	6381-92-6	372.23	Row C Shelf 25	1	300 g	0.88	liquid	40997-5000	Acros	Nonhazardous	0.15754		None	4/6/2011	In Library
Ethylene glycol (Spec. Grade)	107-21-1	62.07	Row C Shelf 25	1	100 ml	0.22	liquid	293237-2L	Sigma	Toxic	0.0394		Danger	8/13/2005	In Library
Eugenol	97-53-0	164.2	Row C Shelf 25	1	75 mL	0.17	liquid	E5,179-1	Aldrich	Irritant	0		Warning	10/21/1999	In Library
Fast Black K salt	64071-86-9	417.88	Row C Shelf 25	1	25 g	0.06	solid	20,151-0	Aldrich	Irritant	0		Warning	9/5/2013	Poor Spectra
Fast Blue B salt	14263-94-6	475.47	Row C Shelf 25	1	25 g	0.06	solid	34,077-4	Aldirch	Toxic	0		Danger	unknown	Poor Spectra

Material Name	CAS #	F. W. (g/mol)	Location	# of Cont.	Amount	Weight (lbs)	Physical State	CAT #	Company	Warnings	Unit Price ($)	GHS Symbols	Signal Word	Rec'd	Raman
Fast Blue RR salt	14726-29-5	775.78	Row C Shelf 25	1	25 g	0.06	solid	F0509	Sigma	Nonhazardous	0		None	unknown	Poor Spectra
Fast Green FCF	2353-45-9	808.85	Row C Shelf 25	1	10 g	0.02	solid	F-99	Fisher	mutagen	0		Warning	unknown	Poor Spectra
Fast Red S (Amaranth)	915-67-3	604.47	Row C Shelf 25	1	25 g	0.06	solid	old	Allied Chemica	Irritant	0		Warning	unknown	Poor Spectra
Ferric ammonium sulfate dodecahydrate	7783-83-7	482.19	Row C Shelf 26	1	90 g	0.20	solid	I-75	Fisher	Nonhazardous	0.0574		None	unknown	In library
Ferrous ammonium sulfate hexahydrate	7783-85-9	392.1	Row C Shelf 26	1	344 g	0.76	solid	F-3754	Sigma	Irritant	0.574		Warning	unknown	Poor Spectra
Ferrous sulfate heptahydrate	7782-63-0	278.02	Row C Shelf 26	1	1300 g	2.86	solid	2070	JT Baker	Irritant	0		Warning	unknown	Poor Spectra
Ferrous sulfate heptahydrate	7782-63-0	278.02	Row C Shelf 26	1	500g	1.10	solid	F-8633	Sigma	Irritant	0		Warning	Moore Move	Poor Spectra
Florisil 100-200 mesh	1343-88-0	100.39	Row C Shelf 26	1	1000g	2.20	solid	22073-6	Aldrich	none			none	unknown	
9-Fluorenone	486-25-9	180.21	Row C Shelf 26	1	15 g	0.03	solid	1192-1000	Acros	Nonhazardous	0		None	unknown	In Library
Fluroescein	2321-07-5		Row C Shelf 26	1	100 g	0.22	solid	F-7505	sigma	Irritant	0		Warning	unknown	Poor Spectra
Fluoroinert FC-77	52623-00-4	n/a	Row C Shelf 26	2	300 mL	0.66	liquid	F-4758	sigma	Nonhazardous	0		None	unknown	In Library
D-fructose	57-48-7	180.16	Row C Shelf 27	2	1000 g	2.20	solid	L-95	Fisher	Nonhazardous	0		None	unknown	In Library
Fuchsin, acid	3244-88-0	585.54	Row C Shelf 27	2	40 g	0.09	solid	F-97	Fisher	Nonhazardous	0		None	unknown	Poor Spectra
Fuchsin basic	569-61-9	323.82	Row C Shelf 27	3	65 g	0.14	solid	NA 0719	Allied Chemica	Toxic	0		Danger	unknown	Poor Spectra
Fumaric acid	110-17-8	116.07	Row C Shelf 27	1	500 g	1.10	solid	A-120	Fisher	Irritant	0		Warning	unknown	In Library
Fumaric acid monoethyl ester	2459-05-4	144.13	Row C Shelf 27	2	130 g	0.29	solid	156201000	Acros	Irritant	0		Warning	3/7/2002	Added to Library
D-(+)-Galactose	59-23-4	180.16	Row C Shelf 27	4	350 g	0.77	solid	G-1	Fisher	Nonhazardous	0		None	unknown	In Library
Gelatin, 100 bloom	9000-70-8	n/a	Row C Shelf 27	1	475 g	1.05	solid	G7-500	Fisher	Nonhazardous	0		None	unknown	Poor Spectra
Gelatin, 275 bloom	9000-70-8	n/a	Row C Shelf 28	1	500 g	1.10	solid	G-8	Fisher	Nonhazardous	0		None	unknown	Poor Spectra
Giemsa Stain	51811-82-6	291.8	Row C Shelf 28	1	5 g	0.01	solid	G-4507	sigma	Nonhazardous	0		none	unknown	Poor Spectra
Glass wool, Pyrex	65997-17-3	n/a	Row C Shelf 28	4	200 g	0.44	solid	Various	Various	Toxic	0		Danger	unknown	Not Tested
d-glucose 6-phosphate monosodium salt	54010-71-8	282.1	Row C Shelf 28	2	6 g	0.01	solid	G-78-79	sigma	Nonhazardous	0		None	unknown	Added to Library

Chemical Storage - NSB 3181

Material Name	CAS #	F. W. (g/mol)	Location	# of Cont.	Amount	Weight (lbs)	Physical State	CAT #	Company	Warnings	Unit Price ($)	GHS Symbols	Signal Word	Rec'd	Raman
L-Glutamic acid	56-86-0	147.3	Row C Shelf 28	3	295 g	0.65	solid	A-125	Fisher	Nonhazardous	0		None	unknown	In Library
L-Glutamic acid monosodium salt monohydrate	6106-04-3	187.13	Row C Shelf 28	1	148 g	0.33	solid	49621-250G	Aldrich	Nonhazardous	0.164		None	6/3/2014	In Library
L(+)-Glutamine, 99%	56-85-9	146.15	Row C Shelf 28	1	94 g	0.21	solid	11995-1000	Acros	irritant	0.35		warning	9/19/2001	In Library
Glutaric acid	110-94-1	132.12	Row C Shelf 28	2	137 g	0.30	solid	564	Eastman/Kodak	Irritant	0		Warning	unknown	Poor Spectra
Glycerol	56-81-5	92.09	Row C Shelf 29	3	1400 ml	3.08	liquid	15892-0025	Acros	Nonhazardous	0.02982		None	3/31/2010	In Library
Glycine	56-40-6	75.07	Row C Shelf 29	2	600 g	1.32	solid	2384	MCB	Nonhazardous	0.02982		None	unknown	Not Tested
Glycogen	9005-79-2	666.57	Row C Shelf 29	2	15 g	0.03	solid	G-47	Fisher	Nonhazardous	0		None	unknown	In Library
Gly Gly Gly	556-33-2	189.2	Row C Shelf 29	1	15 g	0.03	solid	G-1377	Sigma	Nonhazardous	0		None	unknown	In Library
Guaiacol	90-05-1	124.14	Row C Shelf 29	1	90 g	0.20	liquid	G5502-100G	Sigma	Irritant	0.562		Warning	3/26/2013	Added to Library
Guanidine Hydrochloride	50-01-1	95.53	Row C Shelf 29	1	100 g	0.22	solid	G32-72	Sigma	Mildly Toxic	0		Warning	2/24/1995	In Library
Hepes 99%	7365-45-9	238.3	Row C Shelf 29	1	15 g	0.03	solid	17257-1000	Acros	Irritant	0		Warning	10/14/2001	In Library
1-Heptanol	111-70-6	116.2	Cabnet C Shelf 1	1	150 ml	0.33	liquid	H2805-250ML	Aldrich	Flammable	0		Warning	9/7/2012	In Library
Hexachloroethane	67-72-1	236.74	Row C Shelf 29	1	100 g	0.22	solid	148541000	Acros	Toxic	0		Danger	1/31/2000	able to obtain sam
n-Hexadecane	544-76-3	226.47	Row C Shelf 30	2	600 mL	1.32	liquid	31630	Alfa Aesar	Toxic	0.195		Danger	unknown	In Library
1-Hexadecene	629-73-2	224.43	Row C Shelf 30	1	1000 mL	2.20	liquid	H700-9	Aldrich	Nonhazardous	0		None	unknown	In Library
2,5-Hexanedione	110-13-4	114.15	Row C Shelf 30	1	500 ml	1.10	solid	B25686	Alfa Aesar	Toxic	0		Danger	7/7/2010	In Library
Hippuric acid	495-69-2	179.17	Row C Shelf 30	1	5 g	0.01	solid	150270050	Acros	Nonhazardous	0		None	unknown	In Library
L-Histidine	71-00-1	155.2	Row C Shelf 30	1	5 g	0.01	solid	H-8000	Sigma	Nonhazardous	0		None	unknown	In Library
L-Histidine Monohydrochloride	7048-02-4	209.6	Row C Shelf 30	1	25g	0.06	solid	H-9511	Sigma	Nonhazardous	0		None	unknown	
Hydrocortisone	50-23-7	362.5	Row C Shelf 30	1	1g	0.00	solid	H-4001	Sigma	Toxic	0		Danger	unknown	In Library
4-Hydroxy-3,5-dimethoxybenzylalcohol	530-56-3	184.2	Row C Shelf 30	2	10 g	0.02	solid	A13888	alfa asear	Irritant	0		warning	2/7/2011	Added to Library
2-Hydroxy-5-methylbenzaldehyde	613-84-3	136.15	Row C Shelf 30	1	5 g	0.01	liquid	392630050	Acros	Irritant	0		Warning	8/3/2010	In Library

Chemical Storage - NSB 3181

Material Name	CAS #	F. W. (g/mol)	Location	# of Cont.	Amount	Weight (lbs)	Physical State	CAT #	Company	Warnings	Unit Price ($)	GHS Symbols	Signal Word	Rec'd	Raman
8-Hydroxyquinoline	148-24-3	145.16	Row C Shelf 30	1	100 g	0.22	solid	O-2611	Fisher	toxic	0		Warning	unknown	In Library
N-Hydroxysuccinimide	6066-82-6	115.09	Row C Shelf 30	1	5 g	0.01	solid	157270050	Acros	Irritant	0		Warning	3/26/2002	In Library
S-(+)-Ibuprofen	51146-56-6	206.28	Row C Shelf 30	2	5 g	0.01	Solid	375160	Aldrich	Nonhazardous	35.1		None	10/28/2010	In Library
Indigo carmine	860-22-0	262.27	Row C Shelf 30	2	125 g	0.28	solid	I-166	Fisher	Mildly Toxic	0		Warning	unknown	Poor Spectra
Iron wire	7439-89-6	55.85	Row C Shelf 31	3	1359 g	2.99	solid	2234	Baker	Nonhazardous	0		None	unknown	Not Tested
Iron (II) Bromide	7789-46-0	215.65	Row C Shelf 31	1	5 g	0.01	solid	400831-10G	Aldrich	Irritant	0		Warning	2/9/2011	Poor Spectra
L-Isoleucine	73-32-5	131.2	Row C Shelf 31	1	80 g	0.18	solid	W527602	SAFC	Nonhazardous	0		None	3/23/2010	Added to Library
L-Isoleucine	73-32-5	131.2	Row C Shelf 31	2	30 g	0.07	solid	I-7268	Sigma	Nonhazardous	0		None	unknown	Added to Library
Kanamycin	25389-94-0	582.6	Row C Shelf 31	6	6g	0.01	solid	K-4000	Sigma	Toxic			Danger	unknown	
Lactose	5989-81-1	360.32	Row C Shelf 31	1	323 g	0.71	solid	L-5	Fisher	Nonhazardous	0		None	unknown	In Library
Lanthanum (III) oxide	1312-81-8	325.81	Row C Shelf 31	1	250 g	0.55	solid	O3357-250	Fisher	Irritant	0		Warning	unknown	Added to Library
Lead foil	7439-92-1	207.19	Row C Shelf 31	1	400 g	0.88	solid	L-27	Fisher	Toxic	0		Danger	unknown	Not Tested
Lead powder	7439-92-1	207.19	Row C Shelf 31	1	454 g	1.00	solid	L-29	Fisher	Toxic	0		Danger	unknown	Not Tested
Lead (II) acetate trihydrate	6080-56-4	379.33	Row C Shelf 31	1	420 g	0.93	solid	L-33	Fisher	Toxic	0		Danger	unknown	In Library
Lead (II) carbonate basic	1319-46-6	775.6	Row C Shelf 32	1	2000 g	4.41	solid	24,358-2	Alrdrich	Toxic	0		Danger	6/9/1998	In Library
Lead (II) chloride	7758-95-4	270.1	Row C Shelf 32	1	420 g	0.93	solid	2308	Baker	Toxic	0		Danger	unknown	Poor Spectra
Lead (II) Sulfate	7446-14-2	303.26	Row C Shelf 32	1	200 g	0.44	solid	AC387275000	fisher	Toxic	0.13042		Danger	5/5/2015	Added to Library
L-Leucine	61-90-5	131.2	Row C Shelf 32	1	25g	0.06	solid	L-5652	Sigma	Nonhazardous			None	unknown	
Lithium Bromide	7550-35-8	86.84	Row C Shelf 32	1	100 g	0.22	solid	A0224848	Acros	Irritant	0		Warning	unknown	Poor Spectra
Lithium carbonate	554-13-2	73.89	Row C Shelf 32	1	454 g	1.00	solid	2362	Baker	Irritant	0		Warning	unknown	In Library
Lithium chloride	7447-41-8	42.39	Row C Shelf 32	3	75 g	0.17	solid	L121-500	Fisher	Irritant	0		Warning	unknown	Poor Spectra
Lithium sulfate Monohydrate	10102-25-7	127.96	Row C Shelf 32	1	350 g	0.77	solid	2388	Baker	Irritant	0		Warning	unknown	In Library

Chemical Storage - NSB 3181

Material Name	CAS #	F. W. (g/mol)	Location	# of Cont.	Amount	Weight (lbs)	Physical State	CAT #	Company	Warnings	Unit Price ($)	GHS Symbols	Signal Word	Rec'd	Raman
L-Lysine	56-87-1	146.19	Row C Shelf 32	1	25g	0.06	solid	L-5501	Sigma	Nonhazardous			none	unknown	
L-(+)- Lysine monohydrochloride	657-27-2	182.66	Row C Shelf 32	1	16 g	0.04	solid	LX430	on, Coleman a	Nonhazardous	0		None	unknown	Added to Library
L-(+)- Lysine monohydrochloride	657-27-2	182.66	Row C Shelf 32	1	100 g	0.22	solid	L-1262	Sigma	Nonhazardous	0		None	unknown	Added to Library
Magnesium carbonate basic	39409-82-0	84.31	Row C Shelf 33	1	400 g	0.88	solid	M-29	Fisher	Nonhazardous	0		None	unknown	In Library
Magnesium Chloride Anhydrous	7786-30-3	95.22	Row C Shelf 33	1	250 g	0.55	Solid	AA12315A1	isher/Alfa Aesa	Nonhazardous	0.04818		None	5/28/2013	Not Tested
Magnesium chloride hexahydrate	7791-18-6	203.3	Row C Shelf 33	2	520	1.15	solid	M33-500	Fisher	Nonhazardous	0.11266		None	6/20/2011	Not Tested
Magnesium Nitrate Hexahydrate	13446-18-9	256.41	Row C Shelf 33	1	750 g	1.65	solid	M46-500	Fisher	Nonhazardous	0.08652		None	2/12/2013	In Library
Magnesium sulfate heptahydrate	10034-99-8	246.48	Row C Shelf 33	1	800g	1.76	solid	M-63	Fisher	Nonhazardous	0.04776		None	unknown	Not Tested
Magnesium sulfate heptahydrate	10034-99-8	246.48	Row C Shelf 33	1	300g	0.66	solid	M-7774	Sigma	Nonhazardous	0.04776		None	5/1/1999	Not Tested
Magnesium sulfate anhydrous	7487-88-9	120.37	Row C Shelf 33	2	1225	2.70	solid	33337	Alfa Aesar	Nonhazardous	0.06325		None	4/1/2010	Not Tested
Magnesium sulfate anhydrous	7487-88-9	120.37	Row C Shelf 33	1	450g	0.99	solid	33337	Fisher	Nonhazardous	0.06325		None	Moore Move	Not Tested
Maleic acid	110-16-7	116.1	RowC Shelf 33	1	100 g	0.22	solid	M-0375	Sigma	Corrosive	0.04857		Danger	unknown	In Library
DL-Malic acid	6915-15-7	134.1	RowC Shelf 33	1	75 g	0.17	solid	M0875	Sigma	Corrosive	0		Danger	unknown	In Library
Maltose	69-79-4	360.32	Row C Shelf 33	3	300 g	0.66	solid	M-75	Fisher	Nonhazardous	0		None	unknown	In Library
D+-Maltose monohydrate	6363-53-7	360.31	Row C Shelf 34	1	500 g	1.10	solid	old	Kodak	Nonhazardous	0		None	unknown	In Library
D-Mannitol	69-65-8	182.17	Row C Shelf 34	1	454 g	1.00	solid	M-120	Fisher	Nonhazardous	0		None	unknown	In Library
D-Mannose	3458-28-4	180.16	Row C Shelf 34	1	25 g	0.06	solid	M-121	Fisher	Nonhazardous	0		None	unknown	In Library
Manganese (II) sulfate monohydrate	10034-96-5	169.02	Row C Shelf 34	1	165 g	0.36	solid	22, 128-7	Aldrich	Toxic	0		Danger	unknown	Not Tested
Manganese (II) sulfate monohydrate	10034-96-5	169.02	Row C Shelf 34	1	500g	1.10	solid	M-6528	Sigma	Toxic	0		Danger	8/27/1997	Not Tested
Melting Point Bath Oil (polydimethylsiloxane)	63148-62-9	n/a	Row C Shelf 34	1	400 mL	0.88	liquid	M-6884	Sigma	Nonhazardous	0		None	unknown	In Library
Menadione (Vitamin K3)	58-27-5	172.18	Row C Shelf 34	1	80g	0.18	solid	4396B	eral BioChemi	Irritant			warning	unknown	
2-Mercaptoethanol	60-24-2	78.13	Row C Shelf 34	1	15 ml	0.03	liquid	BP176-100	Fisher	ighly toxic/ corrosiv	0		Danger	unknown	In Library
Mercuric bromide	7789-47-1	360.14	Row C Shelf 34	1	70 g	0.15	solid	M-151	Fisher	Toxic	0		Danger	unknown	Poor Spectra

Chemical Storage - NSB 3181

Material Name	CAS #	F. W. (g/mol)	Location	# of Cont.	Amount	Weight (lbs)	Physical State	CAT #	Company	Warnings	Unit Price ($)	GHS Symbols	Signal Word	Rec'd	Raman
Mercuric iodide red	7774-29-0	454.4	Row C Shelf 34	1	403 g	0.89	solid	M-166	Fisher	Toxic	0		Danger	unknown	Poor Spectra
Mercurous chloride	10112-91-1	236.04	Row C Shelf 34	1	100 g	0.22	solid	M-159	Fisher	Toxic	0		Danger	unknown	In Library
Metacresol purple	2303-01-7	382.43	Row C Shelf 35	1	5 g	0.01	solid	M-199	Fisher	Nonhazardous	0		None	unknown	Poor Spectra
L-Methionine	63-68-3	149.2	Row C Shelf 35	1	25g	0.06	solid	m-2893	sigma	Nonhazardous			None	unknown	
2-methoxy-4-propylphenol	2785-87-7	166.22	Row C Shelf 35	1	100 ml	0.22	liquid	SAFC	00705JD	Toxic	0		Danger	unknown	Added to Library
4-Methylacetophenone	122-00-9	134.18	Row C Shelf 35	1	35 ml	0.08	liquid	M26615-100G	Aldrich	Irritant	0.344		Warning	3/22/2013	In library
Methyl Benzoate	93-58-3	136.15	Row C Shelf 35	1	500 ml	1.10	liquid	M2,990-8	Aldrich	Irritant	0		Warning	unknown	In Library
Methylene blue	7220-79-3	319.85	Row C Shelf 35	2	55 g	0.12	solid	M-291	Fisher	Irritant	0		Warning	unknown	Not Tested
Methylene blue chloride	7220-79-3	319.85	Row C Shelf 35	1	25 g	0.06	solid	60701	Harceo	Irritant	0		Warning	unknown	Not Tested
Methylene chloride	75-09-2	84.93	Row C Shelf 35	4	7500 mL	16.52	liquid	D37-4	Fisher	Toxic	0.0084675		Danger	5/6/2015	In Library
1-Methyl-2-Imidazolecarboxaldehyde	13750-81-7	110.12	Row C Shelf 36	1	3 g	0.01	solid	369850050	Acros	Irritant	22.004		Warning	9/9/2008	In Library
Methyl Orange	547-58-0	327.34	Row C Shelf 36	3	190 g	0.42	solid	M-216	Fisher	Toxic	0		**Danger**	unknown	Poor Spectra
2-Methyl-2,4-pentanediol	107-41-5	118.17	Row C Shelf 36	2	100 mL	0.22	liquid	M-1408	sigma	Irritant	0		Warning	unknown	In Library
Methyl p-toluate	99-75-2	150.17	Row C Shelf 36	1	95 g	0.21	solid	414961000	Acros	Irritant	0.3264		Warning	3/26/2013	Added to Library
Methyl violet	8004-87-3	407.98	Row C Shelf 36	1	50 g	0.11	solid	old	Fisher	Irritant	0		Warning	unknown	Poor Spectra
Methyl yellow	60-11-7	225.29	Row C Shelf 36	2	35 g	0.08	solid	MX1570	MCB	Toxic	0		Danger	unknown	Poor Spectra
Micro cleaner	N/A	n/a	Row C Shelf 36	1	3700 mL	8.15	liquid	M-9032	ational Produc	Nonhazardous	0.00718		None	1/14/2008	Added to Library
Mineral oil	8042-47-5	n/a	Row C Shelf 36	1	1000 ml	2.20	liquid	0122-1	Fisher	Nonhazardous	0.03011		None	7/12/2013	In Library
Molecular sieves	n/a	n/a	Row D Shelf 37	5	2500 g	5.51	solid	M-564	Fisher	Irritant	0		Warning	unknown	Not Tested
Molybdenum hexacarbonyl	13939-06-5	264.01	Row D Shelf 37	1	1 g	0.00	solid	190390100	Acros	Toxic	0		Danger	10/13/2008	In Library
1-Naphthaldehyde	66-77-3	156.18	Row D Shelf 37	1	100 ml	0.22	liquid	N10-9	Aldrich	Irritant	0		Warning	unknown	In Library
1,8-Naphthalic anhydride	81-84-5	198.18	Row D Shelf 37	1	100 g	0.22	solid	N160-7	Aldrich	Irritant	0		Warning	10/20/1997	In Library

Material Name	CAS #	F. W. (g/mol)	Location	# of Cont.	Amount	Weight (lbs)	Physical State	CAT #	Company	Warnings	Unit Price ($)	GHS Symbols	Signal Word	Rec'd	Raman
Naphthol blue black	1064-48-8	616.49	Row D Shelf 37	1	100 g	0.22	solid	N-3005	sigma	Irritant	0		Warning	unknown	Poor Spectra
Nickel metal powder	7440-02-0	58.71	Row D Shelf 37	2	956 g	2.11	solid	N-40	Fisher	Toxic	0		Danger	unknown	Not Tested
Nickel wire	7440-02-0	58.69	Row D Shelf 37	1	1000 g	2.20	solid	old	old	Toxic	0		Danger	unknown	Not Tested
Nickel shot	7440-02-0	58.69	Row D Shelf 37	1	450 g	0.99	solid	old	JT Baker	Toxic	0		Danger	unknown	Not Tested
Nickel (II) Acetate Tetrahydrate	6018-89-9	248.86	Row D Shelf 37	2	440 g	0.97	solid	24,406-6	Aldrich	Toxic	0		Danger	unknown	Poor Spectra
Nickel (II) chloride hexahydrate (tech)	7791-20-0	237.69	Row D Shelf 38	1	450 g	0.99	solid	N-53	Fisher	Toxic	0		Danger	unknown	Poor Spectra
Nickel (II) sulfate hexahydrate	10101-97-0	262.86	Row D Shelf 38	1	100 g	0.22	solid	22, 767-6	Sigma	Toxic	0		Danger	1/4/1994	Poor Spectra
Nicotinic acid	59-67-6	123.11	Row D Shelf 38	1	100 g	0.22	solid	2266	Eastman	Irritant	0		Warning	unknown	In Library
Nile blue chloride	2381-85-3	353.9	Row D Shelf 38	1	5 g	0.01	solid	N-5383	sigma	Nonhazardous	0		None	unknown	Poor Spectra
Nitrilotriacetic acid (disodium salt)	15467-20-6	235.1	Row D Shelf 38	1	25 g	0.11	solid	147830500	Acros	Corrosive	0		Warning	8/24/2000	In Library
Nitrilotriacetic acid (trisodium salt)	5064-31-3	257.1	Row D Shelf 38	1	500 g	1.10	solid	N-0253	Sigma	Corrosive	0		Warning	unknown	In Library
4-nitroaniline	100-01-6	138.13	Row D Shelf 38	1	100 g	0.22	solid	Acros	128371000	Toxic	0		Danger	6/1/2009	In Library
4-Nitrobenzaldehyde	555-16-8	151.12	Row D Shelf 38	1	15g	0.03	solid	156991000	Acros	Irritant	0.7842		Warning	10/7/2004	In Library
Nitrobenzene	98-95-3	123.11	Row D Shelf 38	1	500 mL	1.10	liquid	N91-500	Fisher	Highly Toxic	0		Danger	unknown	In Library
4-nitrophenol	100-02-7	139.11	Row D Shelf 38	1	25 g	0.06	solid	24,132.00	Aldrich	Irritant	0		Warning	unknown	In Library
Novocaine (Procaine Hydrochloride)	51-05-8	272.77	Row D Shelf 38	2	200 ml	0.44	liquid	old	old	Toxic	0		Warning	unknown	Not Tested
1-Octanol	111-87-5	130.23	Cabinet D Shelf 2	1	50 ml	0.11	liquid	A-402	Fisher	irritant	0		Warning	7/16/1981	In Library
2-Octanol	123-96-6	130.23	Row D Shelf 39	1	150 ml	0.33	liquid	O269-500	Fisher	Irritant	0		DANGER	8/1/1989	In Library
Orcinol monohydrate	6153-39-5	142.2	Row D Shelf 39	1	10 g	0.02	solid	O-1875	Sigma	Mildly Toxic	0		Warning	unknown	In Library
Palladium Chloride	7647-10-1	177.33	Row D Shelf 39	2	20 g	0.04	solid	old	old	Toxic	0		Danger	unknown	In Library
Palladium hydroxide	12135-22-7	140.43	Row D Shelf 39	1	10 g	0.02	solid	21,291-1	Aldrich	Nonhazardous	0		None	unknown	Poor Spectra
n-Pentadecane	629-62-9	212.42	Row D Shelf 39	2	25 ml	0.06	liquid	129820250	Acros	Toxic	0.6652		Danger	8/22/2013	In Library

Chemical Storage - NSB 3181

Material Name	CAS #	F. W. (g/mol)	Location	# of Cont.	Amount	Weight (lbs)	Physical State	CAT #	Company	Warnings	Unit Price ($)	GHS Symbols	Signal Word	Rec'd	Raman
1,10-Phenanthroline	66-71-7	180.21	Row D Shelf 39	6	150 g	0.33	solid	157530250	Acros	Toxic	2.61		Danger	8/7/2005	In Library
Phenol red Indicator (sodium salt)	34487-61-1	376.37	Row D Shelf 39	1	3.9 g	0.01	solid	S93322	Fisher	Irritant	1.522		Warning	11/10/2011	Poor Spectra
Phenolphthalein	77-09-8	318.33g/mo	Row D Shelf 39	1	12.5g	0.03	solid	s25466	Fisher	Irritant	0.736		Danger	5/26/2015	In Library
L-Phenylalanine	63-91-2	165.19	Row D Shelf 39	1	80 g	0.18	solid	BP-391-100	Fisher	Nonhazardous	0		None	unknown	In Library
Phenylarsonic Acid	98-05-5	202.04	Row D Shelf 39	1	25 g	0.06	solid	22406-0250	Acros	Toxic	0		Danger	6/18/1997	Added to Library
Phenyl Benzoate	93-99-2	198.22	Row D Shelf 39	1	100 g	0.22	solid	142719	Aldrich	Toxic	0.529		Warning	2/23/2010	In Library
Phenylboronic acid	98-80-6	121.93	Row D Shelf 39	1	1 g	0.00	solid	AC1303604	Acros	Mildly Toxic	0		Warning	9/9/2008	Added to Library
1,3-Phenylenediamine	108-45-2	108.14	Row D Shelf 39	0	0	0.00	solid	P23954-100G	Aldrich	Toxic	0		Danger	5/4/2009	Poor Spectra
o-Phenylenediamine	95-54-5	108.14	Row D Shelf 39	1	30 g	0.07	solid	78412	Fluka Analytica	Toxic	0		Danger	9/15/2008	In Library
p-Phenylenediamine	106-50-3	108.14	Row D Shelf 40	1	100 g	0.22	solid	P6001-100G	Sigma	Toxic	0		Danger	5/4/2009	In Library
Phenylhydrazine hydrochloride	59-88-1	144.6	Row D Shelf 40	1	90 g	0.20	solid	P-88	Fisher	Toxic	0		Danger	unknown	In Library
Phthalocyanine	574-93-6	514.54	Row D Shelf 40	1	5 g	0.01	solid	P514	Frontier Scienc	nonhazardous	0		None	2/2/2010	Not Tested
Pilocarpine HCl	54-71-7	244.7	Row D Shelf 40	2	6 g	0.01	solid	P-6503	Sigma	Toxic	0		Danger	8/20/1998	Added to Library
Platinum black	7440-06-4	195.09	Cabinet D Shelf 3	1	2 g	0.00	solid	P-149	Fisher	Flammable	0		None	unknown	Poor Spectra
Polyethylene Glycol 8000	25322-68-3	7000-9000	Row D Shelf 40	1	1000 g	2.20	solid	BP-233-1	Fisher	Nonhazardous	0		None	unknown	In Library
Polyethylene Glycol 8000	25322-68-3	7000-9000	Row D Shelf 40	2	1000 g	2.20	solid	BP-233-1/P-2139	Fisher/Sigma	Nonhazardous	0		None	unknown	In Library
Polyethylene Glycol 400	25322-68-3	400	Row D Shelf 40	3	2800 ml	6.17	liquid	192230010	Acros	Nonhazardous	0		None	3/1/2000	In Library
Potassium acetate	127-08-2	98.14	Row D Shelf 40	1	500 g	1.10	solid	P171-500	Fisher	Nonhazardous	0.097		None	2/15/2014	Added to Library
Potassium acetate	127-08-2	98.14	Row D Shelf 40	2	550 g	1.10	solid	P-3542	Sigma	Nonhazardous	0.097		None	unknown	Added to Library
Potassium bicarbonate	298-14-6	100.12	Row D Shelf 41	1	454 g	1.00	solid	P-184	Fisher	Nonhazardous	0		None	unknown	In Library
Potassium bromide	7758-02-3	119	Row D Shelf 41	3	1500 g	3.30	solid	P-205	Fisher	Irritant	0		Warning	unknown	Poor Spectra
Potassium bromide IR grade	7758-02-3	119	Row D Shelf 41	2	200 g	0.44	solid	206391000	Acros	Irritant	1.3902		Warning	2/28/2011	Poor Spectra

Material Name	CAS #	F. W. (g/mol)	Location	# of Cont.	Amount	Weight (lbs)	Physical State	CAT #	Company	Warnings	Unit Price ($)	GHS Symbols	Signal Word	Rec'd	Raman
Potassium carbonate anhydrous	584-08-7	138.21	Row D Shelf 41	5	1900 g	4.19	solid	P208-500	Fisher	Irritant	0.0889		Warning	2/7/2007	In Library
Potassium chloride	7447-40-7	74.56	Row D Shelf 41	3	7340 g	16.17	solid	P-217	Fisher	Nonhazardous	0.025904		None	8/27/1991	Poor Spectra
Potassium chromate	7789-00-6	194.2	Row D Shelf 41	3	1300 g	2.86	solid	P-220	Fisher	Toxic	0		Danger	unknown	In Library
Potassium ferricyanide	13746-66-2	329.26	Row D Shelf 41	2	170 g	0.37	solid	P-232	Fisher	Nonhazardous	0		None	unknown	In Library
Potassium ferrocyanide	14459-95-1	442.41	Row D Shelf 42	4	1500 g	3.30	solid	P236-500	Fisher	Nonhazardous	0		None	8/1/1992	Added to Library
Potassium hexafluoroarsenate (V)	17029-22-0	228.02	Row D Shelf 42	1	5 g	0.01	solid	30863-0100	acros	Toxic	0		Danger	6/5/2002	Poor Spectra
Potassium hydrogen phthalate primary std	877-24-7	204.23	Row D Shelf 42	1	50 g	0.11	solid	P243-500	Fisher	Nonhazardous	0.18814		None	2/12/2013	In Library
Potassium Hydrogen Phthalate	877-24-7	204.22	Row D Shelf 42	1	500 g	1.10	solid	417955000	Acros	Nonhazardous	0.16838		None	2/27/2015	In Library
Potassium iodide	7681-11-0	166	Row D Shelf 42	1	500 g	1.10	solid	373655000	Acros	Nonhazardous	0.20844		None	2/29/2016	Poor Spectra
Potassium oxalate	583-52-8	184.24	Row D Shelf 42	1	500 g	1.10	solid	P-273	Fisher	Irritant	0.1116		Warning	unknown	In Library
Potassium phosphate monobasic	7778-77-0	136.09	Row D Shelf 42	2	745 g	1.64	solid	P-284	Fisher	Nonhazardous	0		None	unknown	In Library
Potassium phosphate monobasic	7778-77-0	136.09	Row D Shelf 42	1	250g	0.55	solid	P-285	Fisher	Nonhazardous	0		None	unknown	In Library
Potassium phosphate dibasic	7758-11-4	174.18	Row D Shelf 42	1	240 g	0.53	solid	P-288	Fisher	Nonhazardous	0		None	unknown	Added to Library
Potassium phosphate dibasic	7758-11-4	174.18	Row D Shelf 42	1	450g	0.99	solid	P-288	Fisher	Nonhazardous	0		None	unknown	Added to Library
Potassium sodium tartrate	304-59-6	282.23	Row D Shelf 42	3	819 g	1.80	solid	3262	JT Baker	Nonhazardous	0		None	unknown	In Library
Potassium sulfate	7778-80-5	174.27	Row D Shelf 43	2	3000 g	4.41	solid	P-304	Fisher	Nonhazardous	0		None	unknown	In Library
Potassium thiocyanate	333-20-0	97.88	Row D Shelf 43	2	800 g	1.76	solid	P-317	Fisher	Mildly Toxic	0.093		Warning	unknown	In Library
Praseodymium chloride	10361-79-2	247.27	Row D Shelf 43	1	25 g	0.06	solid	59101	Alfa Aesar	Irritant	0		Warning	unknown	Poor Spectra
L-Proline	147-85-3	115.13	Row D Shelf 43	1	50 g	0.11	solid	15762-1000	Acros	Nonhazardous	0		None	10/24/1995	In Library
L-Proline	147-85-3	115.13	Row D Shelf 43	1	25g	0.06	solid	P-4655	Sigma	Nonhazardous	0		None	unknown	In Library
1,3-Propanediol	504-63-2	76.1	Row D Shelf 43	1	75 ml	0.17	liquid	P50404-100G	sigma	Nonhazardous	0		None	9/1/2008	In Library
Propylene glycol	57-55-6	76.1	Row D Shelf 43	4	4200 mL	9.25	liquid	P-354	Fisher	Toxic	0		Danger	unknown	In Library
Pyrazole	288-13-1	68.08	Row D Shelf 43	2	40 g	0.09	solid	131740250	Acros	Nonhazardous	0		None	1/10/2005	In Library

Chemical Storage - NSB 3181

Material Name	CAS #	F. W. (g/mol)	Location	# of Cont.	Amount	Weight (lbs)	Physical State	CAT #	Company	Warnings	Unit Price ($)	GHS Symbols	Signal Word	Rec'd	Raman
4-pyridinecarboxaldehyde	872-85-5	101.11	Row D Shelf 43	1	25 g	0.06	solid	P6,240-2	sigma	Irritant	0		Warning	1/14/2010	In Library
Pyrophosphate tetrasodium salt, anhydrous	7722-88-5	265.9	Row D Shelf 43	1	500 g	1.10	solid	P-8010	sigma	Irritant	0		Danger	unknown	In Library
Quinine sulfate dihydrate	6119-70-6	782.96	Row D Shelf 43	1	10 g	0.02	solid	Q-29	Fisher	Toxic	0		Warning	unknown	In Library
Riboflavin	83-88-5	376.38	Row D Shelf 44	3	70 g	0.15	solid	old	ional Biochem	Nonhazardous	0		None	unknown	poor spectra
Raffinose	17629-30-0	594.51	Row D Shelf 44	1	75 g	0.17	solid	2425	Eastman	Nonhazardous	0		None	unknown	Added to Library
Resorcinol	108-46-3	110.11	Row D Shelf 44	5	2150 g	4.74	solid	R254-500	Fisher	Irritant	0.0865		Danger	9/6/2005	In Library
D-(-)-Ribose	50-69-1	150.13	Row D Shelf 44	1	90 g	0.20	solid	R-175	Aldrich	Nonhazardous	0		None	6/26/1995	In Library
Rose bengal	632-69-9	1,017.64	Row D Shelf 44	2	20 g	0.04	solid	C2245	Eastman	Nonhazardous	0		None	unknown	Poor Spectra
Rosolic Acid	603-45-2	290.31	Row D Shelf 44	6	6g	0.01	solid	3228-09	Difco	Irritant			Warning	unknown	
Saccharin	81-07-2	183.18	Row D Shelf 44	1	99 g	0.22	Solid	149001000	Acros	Nonhazardous	0		None	unknown	In Library
Sand	14808-60-7	n/a	Row D Shelf 44	1	2000 g	4.41	solid	S25	Fisher	Nonhazardous	0.02477		None	10/24/2008	In Library
Selenous Acid	7783-00-8	128.97	Row D Shelf 44	1	10 g	0.02	solid	211176	Aldrich	Toxic	0		Danger	1/20/2005	In Library
Selenium Powder	7782-49-2	78.96	Row D Shelf 44	1	7 g	0.02	solid	S-137	Fisher	Toxic	0		Danger	unknown	Poor Spectra
Selenium dioxide	7446-08-4	4/19/1900	Row D Shelf 44	1	100 g	0.22	solid	649	Lancaster	Toxic	0		Danger	9/8/2003	Added to Library
Sephadex G-25	9041-35-4	n/a	Row D Shelf 45	1	20 g	0.04	solid	G-25-150	sigma	Nonhazardous	0		None	2002	Added to Library
Sephadex G-50	9048-71-9	n/a	Row D Shelf 45	1	50 g	0.11	solid	G-50-80	sigma	Nonhazardous	0		None	unknown	Added to Library
Sephadex G-75	37224-29-6	n/a	Row D Shelf 45	1	10 g	0.02	solid	G-75-120	sigma	Nonhazardous	0		None	unknown	Added to Library
Sephadex G-100-120	9050-94-6	n/a	Row D Shelf 45	1	50 g	0.11	solid	G-100-120	sigma	Nonhazardous	0		None	unknown	Added to Library
Sephadex G-200	9041-36-5	n/a	Row D Shelf 45	1	25 g	0.06	solid	G-200-120	sigma	Nonhazardous	0		None	unknown	Added to Library
Silicic Acid	1343-98-2	78.1	Row D Shelf 45	1	400 g	0.88	solid	A-945	Fisher	Nonhazardous	0		None	unknown	Poor Spectra
Silica gel 70-230 mesh	112926-00-8	n/a	Row D Shelf 45	1	1000 g	2.20	solid	unknown	unknown	Nonhazardous	0.08995		None	2/11/2014	Poor Spectra
Silicon	7440-21-3	28.09	Row D Shelf 45	1	420 g	0.93	solid	S-164	Fisher	Nonhazardous	0		None	unknown	Poor Spectra

Material Name	CAS #	F. W. (g/mol)	Location	# of Cont.	Amount	Weight (lbs)	Physical State	CAT #	Company	Warnings	Unit Price ($)	GHS Symbols	Signal Word	Rec'd	Raman
Silicone oil	63148-62-9	136.2	Row D Shelf 46	2	100 ml	0.22	liquid	146153	Sigma-Aldrich	Nonhazardous	0.0457		None	8/3/2004	In Library
Silver acetate	563-63-3	166.92	Row D Shelf 46	1	20 g	0.04	solid	S-170	Fisher	Irritant	0		Warning	unknown	In Library
Silver iodide	7783-96-2	234.77	Row D Shelf 46	1	100 g	0.22	solid	S-178	Fisher	Nonhazardous	0		None	unknown	Poor Spectra
Sodium acetate anhydrous	127-09-3	82.03	Row D Shelf 46	4	2695 g	5.95	solid	S25530A	Fisher	Nonhazardous	0.05564		None	4/17/2015	In Library
Sodium acetate anhydrous	127-09-3	82.03	Row D Shelf 46	1	120g	0.26	solid	S-2889	Sigma	Nonhazardous	0.05564		None	Moore Move	In Library
Sodium acetate trihydrate	6131-90-4	136.08	Row D Shelf 46	2	3992 g	8.79	solid	S-209	Fisher	Nonhazardous	0		None	unknown	In Library
Sodium ammonium phosphate tetrahydrate	7783-13-3	209.09	Row D Shelf 46	2	750 g	1.65	solid	S218	ker and Adams	Nonhazardous	0		None	unknown	Added to Library
Sodium arsenite	7784-46-5	129.91	Row D Shelf 46	1	500 g	1.10	solid	S-225	Fisher	Toxic	0		Danger	unknown	Added to Library
Sodium azide	26628-22-8	65.01	Row D Shelf 47	1	40 g	0.09	solid	S227-100	Fisher	Toxic	0		Danger	unknown	In Library
Sodium bicarbonate	144-55-8	84.01	Row D Shelf 47	3	4000 g	8.81	solid	S-233	Fisher	Nonhazardous	0		None	unknown	In Library
Sodium bismuthate	12232-99-4	279.97	Row D Shelf 47	1	50 g	0.11	solid	S-238	Fisher	Irritant	0		Warning	unknown	Poor Spectra
Sodium bisulfite	7631-90-5	104.06	Row D Shelf 47	2	550 g	1.21	solid	S-654	Fisher	Irritant	0		Warning	6/1/1982	In Library
Sodium bisulfite	7631-90-5	104.06	Row D Shelf 47	1	500g	1.10	solid	3556-01	J.T. Baker	Irritant	0		Warning	unknown	In Library
Sodium borate decahydrate	1303-96-4	381.37	Row D Shelf 47	5	10200 g	22.47	solid	S-248	Fisher	Toxic	0		Danger	unknown	In Library
Sodium bromide	7647-15-6	102.9	Row D Shelf 47	2	600 g	1.32	solid	S-255	Fisher	Nonhazardous	0		None	unknown	Poor Spectra
Sodium carbonate anhydrous	497-19-8	105.99	Row D Shelf 48	1	1000 g	2.20	solid	S25539D	Sci-ed Fisher	Irritant	0.004925		Warning	2/29/2016	In Library
Sodium carbonate anhydrous	497-19-8	105.99	Row D Shelf 48	1	500 g	1.10	solid	3604	Baker	Irritant	0.004925		Warning	unknown	In Library
Sodium carbonate decahydrate	6132-02-1	286.14	Row D Shelf 48	1	100 g	0.22	solid	271071000	Acros	Irritant	0.1864		Warning	11/8/2011	In library
Sodium carbonate monohydrate	5968-11-6	124	Row D Shelf 48	1	2960 g	6.52	solid	S-262-3	Fisher	Irritant	0.0383		Warning	2/20/2012	In Library
Sodium Citrate Dihydrate	6132-04-3	294.1	Row D Shelf 48	1	150 g	0.33	Solid	S279-500	Fisher	Nonhazardous	0		None	unknown	In Library
Sodium Citrate Dihydrate	6132-04-3	294.1	Row D Shelf 48	2	350 g	0.77	Solid	S279-500	Fisher/JT Bake	Nonhazardous	0		None	unknown	In Library
Sodium chloride	7647-14-5	58.44	Row D Shelf 48	1	1450 g	3.19	solid	S271-3	Fisher	Nonhazardous	0.02312		None	2/23/2012	Poor Spectra
Sodium chloride	7647-14-5	58.44	Row D Shelf 48	4	2000g	4.41	solid	S-5886	Sigma	Nonhazardous	0.02312		None	unknown	Poor Spectra

Material Name	CAS #	F. W. (g/mol)	Location	# of Cont.	Amount	Weight (lbs)	Physical State	CAT #	Company	Warnings	Unit Price ($)	GHS Symbols	Signal Word	Rec'd	Raman
Sodium desoxycholate	302-95-4	414.55	Row E Shelf 49	1	15 g	0.03	solid	S-285	Fisher	Irritant	0		Warning	6/1/1982	Poor Spectra
Sodium fluoride	7681-49-4	41.99	Row E Shelf 49	3	1149 g	2.531	solid	S-299	Fisher	Toxic / Fatal	0		Danger	unknown	Poor Spectra
Sodium iodide dihydrate	13517-06-1	185.93	Row E Shelf 49	1	50 g	0.11	solid	202891000	Acros/Fisher	Irritant	0.06195		Warning	3/24/2010	Poor Spectra
Sodium iodide	7681-82-5	149.89	Row E Shelf 49	1	150 g	0.55	solid	S5554	Fisher	Irritant	0.2026		Warning	9/30/13	Poor Spectra
Sodium oxalate	62-76-0	134	Row E Shelf 49	1	450 g	0.99	solid	S-356	Fisher	Irritant	0		Warning	unknown	In Library
Sodium phosphate monobasic monohydrate	10049-21-5	137.99	Row E Shelf 49	3	1200 g	2.64	solid	S-369	Fisher	Nonhazardous	0		None	4/24/1990	In Library
Sodium Phosphate Dihydrogen Dihydrate	13472-35-0	156.01	Row E Shelf 49	1	85 g	0.19	solid	A11316	Alfa Aesar	Nonhazardous	0.2959		None	9/23/2013	In library
Sodium phopshate monobasic anhydrous	7558-80-7	119.98	Row E Shelf 49	2	250 g	0.55	solid	S2554-100G	Aldrich	Nonhazardous	0.5907		None	6/3/2014	In Library
Sodium phopshate monobasic anhydrous	7558-80-7	119.98	Row E Shelf 49	1	450g	0.99	solid	S-0751	Sigma	Nonhazardous	0.5907		None	Moore Move	In Library
Sodium Phosphate Dibasic Dodecahydrate	10039-32-4	358.13	Row E Shelf 50	1	735 g	1.62	solid	AC448160010	Acros	Nonhazardous	0.04332		None	9/23/2013	In Library
Sodium phosphate dibasic heptahydrate	7782-85-6	268.07	Row E Shelf 50	2	400 g	0.88	solid	S-373	Fisher	Nonhazardous	0		None	unknown	In Library
Sodium phosphate dibasic anhydrous	7558-79-4	141.96	Row E Shelf 50	2	2140 g	4.71	solid	S-374	Fisher	Nonhazardous	0.06502		None	10/20/1987	In Library
Sodium phosphate dibasic anhydrous	7558-79-4	141.96	Row E Shelf 50	2	200 g	0.44	solid	S0876	Sigma	Nonhazardous	0.06502		None	Moore Move	In Library
Sodium phosphate tribasic dodecahydrate	10101-89-0	380.12	Row E Shelf 50	4	2650g	5.84	solid	S-377	Fisher	Nonhazardous	0		None	unknown	In Library
Sodium Polyacrylate	9003-04-7	4/3/1900	Row E Shelf 50	1	100 g	0.22	solid	S73001	Fisher	Irritant	0		Warning	7/8/2010	Poor Spectra
Sodium potassium tartrate tetrahydrate	6381-59-5	282.23	Row E Shelf 50	2	1400 g	3.08	solid	S-387	Fisher	Nonhazardous	0		None	unknown	In Library
Sodium pyrophosphate decahydrate	13472-36-1	446.06	Row E Shelf 51	1	400 g	0.88	solid	S390-500	Fisher	Irritant	0		Warning	unknown	In Library
Sodium salicylate	54-21-7	160.11	Row E Shelf 51	1	450 g	0.99	solid	S-395	Fisher	Mildly Toxic	0		Warning	unknown	In Library
Sodium sulfate anhydrous	7757-82-6	142.04	Row E Shelf 51	2	1000 g	2.20	solid	S421-3	Fisher	Nonhazardous	0.01816		None	11/8/2011	In Library
Sodium sulfate anhydrous	7757-82-6	142.04	Row E Shelf 51	1	350g	0.77	solid	S-5640	Sigma	Nonhazardous	0.01816		None	unknown	In Library
Sodium sulfite	7757-83-7	126.04	Row E Shelf 51	9	7000 g	15.42	solid	S-430	Fisher	Nonhazardous	0		None	5/11/1984	In Library
Sodium Tartrate	6106-24-7	230.08	Row E Shelf 52	2	750 g	1.65	solid	S-435	Fisher	Nonhazardous	0		None	unknown	Added to Library
Sodium thiosulfate anhydrous	7772-98-7	148.1	Row E Shelf 52	1	200 g	0.44	solid	S-1648	Sigma	Nonhazardous	0.0202		None	unknown	In Library

Material Name	CAS #	F. W. (g/mol)	Location	# of Cont.	Amount	Weight (lbs)	Physical State	CAT #	Company	Warnings	Unit Price ($)	GHS Symbols	Signal Word	Rec'd	Raman
Sodium thiosulfate pentahydrate	10102-17-7	248.19	Row E Shelf 52	1	1080g	2.38	solid	S474-3	Fisher	Nonhazardous	0.03704		None	11/8/2008	In Library
Sodium tungstate	10213-10-2	329.95	Row E Shelf 52	1	2000 g	4.41	solid	SX830	JT Baker	Irritant	0		Warning	unknown	In Library
Sorbic acid	110-44-1	112.13	Row E Shelf 52	1	100 g	0.22	solid	S-1626	sigma	Irritant	0		Warning	2/5/1977	In Library
Starch, Potato	9005-25-8	n/a	Row E Shelf 53	2	2000 g	4.41	solid	S-4501	sigma	Nonhazardous	0		None	10/1/1994	In Library
Starch, Soluble	9005-84-9	342.3	Row E Shelf 53	1	355 g	0.78	Solid	S-4501	sigma	nonhazardous	0		None	unknown	In Library
Stearic acid	57-11-4	284.48	Row E Shelf 53	1	1300 g	2.86	solid	A-292	Fisher	Nonhazardous	0		None	unknown	In Library
Succinic acid	110-15-6	118.09	Row E Shelf 53	2	800 g	1.76	solid	A-294	Fisher	Irritant	0		Warning	unknown	In Library
Sucrose	57-50-1	342.3	Row E Shelf 53	1	600 g	1.32	solid	S5-3	Fisher	Nonhazardous	0		None	unknown	In Library
Sucrose	57-50-1	342.3	Row E Shelf 53	2	1300 g	2.86	solid	5503UA/S0389	Technology/Si	Nonhazardous	0		None	unknown	In Library
Sudan (III)	85-86-9	352.4	Row E Shelf 54	2	35 g	0.08	solid	S-669	Fisher	Nonhazardous	0		None	unknown	Poor Spectra
Sulfanilic acid	121-57-3	173.19	Row E Shelf 54	2	380 g	1.06	solid	15071-0010	Acros	Irritant	0.13199		Warning	2/9/2000	In Library
Sulfosalicylic acid	5965-83-3	254.22	Row E Shelf 54	1	100 g	0.22	solid	A-297	Fisher	Irritant	0		Warning	unknown	Added to Library
Sulfur	7704-34-9	32.07	Row E Shelf 54	4	1700 g	3.74	solid	S-591	Fisher	Mildly Toxic	0		Warning	unknown	Not Tested
Taurine	107-35-7	125.14	Row E Shelf 54	1	70 g	0.15	solid	16654-1000	acros	Irritant	0		Warning	8/27/1996	In Library
Tetrabutylammonium chloride	1112-67-0	277.92	Row E Shelf 54	2	25 g	0.06	solid	17412-0250	Acros	Irritant	0		Warning	unknown	In Library
n-Tetradecane	629-59-4	198.39	Row E Shelf 54	1	10 mL	0.02	liquid	30809	Alfa Aesar	Toxic	1.34		Danger	9/3/2008	In Library
Tetramethylammonium chloride	75-57-0	109.8	Row E Shelf 55	1	25 g	0.06	solid	13833-1000	Acros	Toxic	0		Danger	4/21/1997	In Library
Tetraphenylcyclopentadienone	479-33-4	384.48	Row E Shelf 55	1	10 g	0.02	Solid	T25801	Aldrich	Nonhazardous	0		None	unknown	In Library
Theobromine	83-67-0	180.2	Row E Shelf 55	1	20 g	0.04	solid	T-4500	sigma	Irritant	0		Warning	unknown	In Library
Thiamine Hydrochloride	67-03-8	337.3	Row E Shelf 55	2	25 g	0.06	solid	T-4625	sigma	Nonhazardous	0		None	unknown	Added to Library
Thiamine Hydrochloride	67-03-8	337.3	Row E Shelf 55	1	10g	0.02	solid	T-1270	sigma	Nonhazardous	0		None	unknown	Added to Library
Thionin	135-59-1	263.75	Row E Shelf 55	1	20 g	0.04	solid	OLD	Allied Chemica	Nonhazardous	0		None	unknown	Poor Spectra

Chemical Storage - NSB 3181

Material Name	CAS #	F. W. (g/mol)	Location	# of Cont.	Amount	Weight (lbs)	Physical State	CAT #	Company	Warnings	Unit Price ($)	GHS Symbols	Signal Word	Rec'd	Raman
Thiourea	62-56-6	76.12	Row E Shelf 55	2	948 g	2.09	solid	T-101	Fisher	Toxic	0.0425		Warning	unknown	In Library
DL-Threonine	80-68-2	119.2	Row E Shelf 55	1	4 g	0.01	solid	old	sigma	Nonhazardous	0		None	unknown	In Library
L-threonine	72-19-5	119.2	Row E Shelf 55	1	100 g	0.22	solid	T3,420-7	Aldrich	Nonhazardous	0		None	unknown	In Library
Thymine	65-71-4	126.1	Row E Shelf 55	1	5 g	0.01	solid	T-0376	sigma	Nonhazardous	0		None	unknown	In Library
Thymol Blue	76-61-9	466.59	Row E Shelf 55	1	4 g	0.01	solid	32728	sigma	Nonhazardous	0		None	unknown	In Library
Tin foil	7440-31-5	118.68	Row E Shelf 55	3	1500 g	3.30	solid	T-131	Fisher	Irritant	0		Warning	unknown	Not Tested
Tin metal Granule- 20 mesh	7440-31-5	118.7	Row E Shelf 56	1	454 g	1.00	solid	old	Mallinkrodt	Irritant	0		Warning	unknown	Not Tested
Tin granules	7440-31-5	118.68	Row E Shelf 56	3	1500g	3.30	solid	Y141	ker and Adams	Irritant	0		Warning	unknown	Not Tested
Tin powder (200 mesh)	7440-31-5	118.68	Row E Shelf 56	6	3000 g	6.61	solid	T-129	Fisher	Irritant	0		Warning	unknown	Not Tested
Tin mossy	7440-31-5	118.7	Row E Shelf 56	2	2250 g	4.96	solid	4138	Seargent Welcl	Irritant	0		Warning	unknown	Not Tested
Tin shot	7440-31-5	118.68	Row E Shelf 56	1	2200 g	4.85	solid	4144	JT Baker	Irritant	0		Warning	unknown	Not Tested
p-Tolualdehyde	104-87-0	120.15	Row E Shelf 56	1	75 mL	0.17	liquid	A0344190	Fisher	Irritant			Warning	11/12/2015	
Tributyl Phosphate	126-73-8	266.31	Row E Shelf 56	1	85 mL	0.19	liquid	00675-100	sigma	Toxic	0		Danger	9/16/2010	In Library
1,2,3 - Trichlorobenzene	87-61-6	181.45	Row E Shelf 57	1	2 g	0.00	solid	139390050	Acros	Irritant	0		Warning	4/5/2002	In Library
1,1,1 - Trichloroethane	71-55-6	133.41	Row E Shelf 57	2	1000 ml	2.20	liquid	T391-1	Fisher	Mildly Toxic	0		Warning	12/7/1993	In Library
n-Tridecane	629-50-5	184.36	Row E Shelf 57	2	30 mL	0.07	liquid	139510250	Acros	Toxic	1.34		Danger	8/30/2011	In Library
Triethylene glycol	112-27-6	150.17	Row E Shelf 57	1	500 mL	1.10	liquid	139590010	Acros	Nonhazardous	0.01494		None	9/6/2005	In Library
Triketohydrinedene hydrate (Ninhydrin)	485-47-2	178.15	Row E Shelf 57	2	11 g	0.02	solid	T-349	Fisher	Mildly Toxic	0		Warning	8/1/1989	In Library
3,4,5-Trimethoxybenzaldehyde	86-81-7	196.2	Row E Shelf 57	1	10 g	0.02	solid	T68403-25G	Aldrich	Nonhazardous	1.4428		None	3/22/2013	In library
Tris Hydroxymethyl Aminomethane Hydrochlorid	1185-53-1	157.6	Row E Shelf 57	1	250 g	0.55	Solid	BP153-500	Fisher	Nonhazardous	P.D.		None	unknown	In Library
THAM (Tris Hydroxymethyl Aminomethane)	77-86-1	121.14	Row E Shelf 57	3	1800 g	3.965	solid	T-1503/T-6791	Sigma	None	0		None	unknown	in Library
Triton X-100	9002-93-1	629	Row E Shelf 57	1	100 ml	0.22	liquid	BP151-100	Fisher	Irritant	0		Warning	unknown	In Library
L (-) Tryptophan	73-22-3	204.23	Row E Shelf 58	4	20 g	0.04	solid	T-361	Fisher	Nonhazardous	0		None	unknown	In Library

Chemical Storage - NSB 3181

Material Name	CAS #	F. W. (g/mol)	Location	# of Cont.	Amount	Weight (lbs)	Physical State	CAT #	Company	Warnings	Unit Price ($)	GHS Symbols	Signal Word	Rec'd	Raman
L (-) Tryptophan	73-22-3	204.23	Row E Shelf 58	2	30g	0.07	solid	T-0271	Fisher	Nonhazardous	0		None	unknown	In Library
Tween 20	9005-64-5	1227.54	Row E Shelf 58	2	500 ml	1.10	liquid	BP337-500	Fisher	Nonhazardous	0.02535		None	1/31/2000	In Library
Tween 80	9005-65-6	n/a	Row E Shelf 58	0	0 ml	0.00	liquid	T-164	Fisher	Nonhazardous	0.11454		None	unknown	Added to Library
L - Tyrosine	60-18-4	181.19	Row E Shelf 58	2	100 g	0.22	solid	BP-396-100	Fisher	Nonhazardous	0		None	unknown	In Library
n-Undecane	1120-21-4	156.31	Row E Shelf 58	1	90 mL	0.20	liquid	14066-1000	Acros	Toxic	0.35		Danger	9/7/2010	In Library
Uranine (Sodium Fluorescein)	518-47-8	376.28	Row E Shelf 58	3	1362 g	3.00	solid	A-833	Fisher	Nonhazardous			None	unknown	
Urea	57-13-6	60.06	Row E Shelf 58	7	2100 g	4.63	solid	U15-500	Fisher	Nonhazardous	0.05446		None	3/24/2015	In Library
DL - Valine	516-06-3	117.1	Row E Shelf 58	2	40 g	0.09	solid	old	old	Nonhazardous	0		None	unknown	In Library
L-Valine	72-18-4	117.1	Row E Shelf 58	1	3 g	0.01	solid	old	old	Nonhazardous	0		None	unknown	In Library
L-Valine	72-18-4	117.1	Row E Shelf 58	1	25 g	0.06	solid	V-0258	Sigma	Nonhazardous	0		None	unknown	In Library
Vanadium (IV) sulfate oxide hydrate	27774-13-6	163	Row E Shelf 59	1	20 g	0.04	solid	11090	Alfa Aesar	Toxic	0		Warning	unknown	Poor Spectra
Vanadyl (IV) Sulfate hydrate	12439-96-2	163	Row E Shelf 59	1	20 g	0.04	solid	214840250	Acros	Toxic	0		Warning	8/5/2008	Poor Spectra
Vanillin	121-33-5	152.15	Row E Shelf 59	1	70 g	0.15	solid	V-9	Fisher	Irritant	0		Warning	unknown	In Library
Xanthine	69-89-6	152.1	Row E Shelf 59	1	1 g	0.00	solid	X-0626	sigma	Irritant	0		Warning	unknown	In Library
Zinc shot	7440-66-6	65.37	Row E Shelf 59	3	1000 g	2.20	solid	Z12-500	Fisher	Nonhazardous	0.071		None	unknown	Not Tested
Zinc metal/30 mesh	7440-66-6	65.37	Row E Shelf 59	3	1900 g	4.19	solid	Z16-500	Fisher	Nonhazardous	0.10654		None	11/13/2006	Not Tested
Zinc sticks	7440-66-6	65.37	Row E Shelf 59	3	2000 g	4.41	solid	26,636-1	Aldrich	Nonhazardous	0		None	unknown	Not Tested
Zinc sheets	7440-66-6	65.37	Row E Shelf 59	6	2718 g	5.99	solid	Z-7	Fisher	Nonhazardous	0		None	3/1/1997	Not Tested
Zinc Oxide	1314-13-2	81.38	Row E Shelf 60	2	100 g	0.22	solid	422741000	Acros	Nonhazardous	0.493		None	9/23/2014	Added to Library

Appendix 3.7

Facilities Services Chemical List

Item No.	Product	Revision Date	Product CAS #	Last Verified	Regulatory Format
1	(CSF) Acid-Based Foam Coil Cleaner Manufacturer: ATLANTIC CHEMICAL/EQUIPMENT CO.	1/1/06		N/A	Not Determined
2	(FNA) Foam N Clean Aerosol Manufacturer: ATLANTIC CHEMICAL/EQUIPMENT CO.	6/1/03		N/A	Not Determined
3	1064 Graffiti Remover Manufacturer: Hillyard, Inc. Hillyard Industries	1/1/99		N/A	Not Determined
4	2-Propanol Fluka Manufacturer: Sigma-Aldrich Corporation	11/5/07		12/3/14	Not Determined
5	3 in One Manufacturer: WD-40 Company	4/12/05		N/A	Not Determined
6	3-IN-ONE OIL Manufacturer: RS COMPONENTS LTD.	1/20/00	64742-52-5	N/A	Not Determined
7	3M Brand TROUBLE SHOOTER CLEANER Manufacturer: 3M Corporation 3M - Commercial Care	9/18/01		N/A	Not Determined
8	4 N 1 Manufacturer: Pro-Chem, Inc.	4/1/06		N/A	Not Determined
9	460-S0110 SOLN AKD-1 (Low range titrant), Form Liquid Manufacturer: Nalco An Ecolab Company Nalco Company	2/21/04		4/11/16	Not Determined
10	460-S0123 SOLN HTD-3 (Low Range Titrant), Form Liquid Manufacturer: Nalco An Ecolab Company Nalco Company	2/21/04		4/11/16	Not Determined
11	460-S0124 Soln HTD-4 (High Range Titrant), Formiquid Manufacturer: Nalco An Ecolab Company Nalco Company	2/21/04		N/A	Not Determined
12	460-S0209 SOLN BARIUM CHLORIDE CRYSTALS, FORM SOLID REAGENT Manufacturer: Nalco An Ecolab Company Nalco Company	12/2/10		N/A	US ANSI
13	460-S0222 SOLN P Indicator (Phenolphthalein), Form Liquid Manufacturer: Nalco An Ecolab Company Nalco Company	4/22/10		10/17/13	US ANSI
14	460-S0234 SOLN TDS-1, FORM LIQUID INDICATOR LIQUID Manufacturer: Nalco An Ecolab Company Nalco Company	1/10/13		N/A	US ANSI
15	460-S0297 SOLN 3000 Micromho Standard, Form Liquid Manufacturer: Nalco An Ecolab Company Nalco Chemical Company	12/19/05		2/21/14	Not Determined
16	460-S0407 SOLN pH 7.0 Buffer, Form Liquid Manufacturer: Nalco An Ecolab Company Nalco Company	1/20/15		5/11/16	GHS SDS, US ANSI
17	460-S0466 SOLN Fe-HL DR/2000, Form Solid Manufacturer: Nalco An Ecolab Company Nalco Company	12/16/10		7/6/15	Not Determined
18	460-S0901 Soln TSC-1, Form Liquid Manufacturer: Nalco An Ecolab Company Nalco Company	2/11/15		3/10/16	GHS SDS, US ANSI
19	460-S0906 SOLN TSC Indicator, Form Liquid INDICATOR LIQUID Manufacturer: Nalco An Ecolab Company Nalco Chemical Company	2/21/04		5/29/14	Not Determined
20	460-S0920 SOLN TRASAR 2 Calibration Solution, Factor=1, Form Liquid - CANADA	2/29/04		N/A	Not Determined

Appendix 3.7
Facilities Services Chemical List

Item No.	Product	Revision Date	Product CAS #	Last Verified	Regulatory Format
	Manufacturer: Nalco An Ecolab Company Nalco Chemical Company				
21	460-S0980 SOLN TRASAR 3 Cal Solution, Factor=1 (For Nexguard applications) Manufacturer: Nalco An Ecolab Company Nalco Company	2/21/04		N/A	Not Determined
22	460-S614A SOLN ST-2A Dropwise Sulfite, Form Liqud - CANADA Manufacturer: Nalco An Ecolab Company Nalco Chemical Company	2/29/04		N/A	Not Determined
23	460-SO111 SOLN AKD-2 (HIGH RANGE TITRANT), FORM LIQUID Manufacturer: Nalco An Ecolab Company Nalco Chemical Company	3/30/01		N/A	Not Determined
24	85078, C5078 Aero-Chem Brute Magic Oil Manufacturer: Parts Associates Inc.	8/17/01		7/24/13	Not Determined
25	8-CHLOROXANTHINE Manufacturer: MP Biomedicals, LLC MP Biomedicals Inc	4/24/06	13548-68-0	N/A	Not Determined
26	ACC Aerosol A formulated aerosol coil cleaner. Manufacturer: State Chemical Manufacturing Company	3/1/04		N/A	Not Determined
27	ACE HEAVY DUTY CONSTRUCTION ADHESIVE Manufacturer: Franklin International	1/30/96		N/A	Not Determined
28	Ace Pipe Cleaner Manufacturer: E-Z Weld Group, LLC E-Z WELD	5/1/01		N/A	Not Determined
29	ACE Rust Stop Machine & Implement Enamel, Equipment Yellow Manufacturer: ACE HARDWARE CORPORATION	9/1/07		N/A	Not Determined
30	ACE WET R' DRY PVC CEMENT BLUE Manufacturer: E-Z Weld Group, LLC E-Z WELD	5/1/01		N/A	Not Determined
31	Acetic Acid Solution Methane Carboxylic Acid; Acetic Acid, 30% Solution (w/v); Acetic Acid Solution 4.0N Manufacturer: Avantor Performance Materials Mallinckrodt - J.T. Baker, Inc.	2/16/06	64-19-7	N/A	Not Determined
32	Acme Dormant Oil Spray Manufacturer: PBI - Gordon Corporation	1/14/87		N/A	Not Determined
33	ADHESIVE-LUBE Manufacturer: Black Swan Manufacturing Company	1/1/15		5/2/16	EU MSDS, GHS SDS, US ANSI
34	AEROSOL CAN MARKING PAINT 16 OZ. AEROSOL CAN Manufacturer: KIMBALL-MIDWEST	9/1/99		N/A	Not Determined
35	AEROSOL DEFTHANE SEMI-GLOSS Manufacturer: Deft, Inc.	4/18/06		N/A	Not Determined
36	Alizarin Red S Riedel Manufacturer: Sigma-Aldrich Corporation	2/5/06		N/A	Not Determined
37	Alizarin Yellow R Riedel Manufacturer: Sigma-Aldrich Corporation	10/13/06		N/A	Not Determined
38	Alpha Hp Multi-Surface Cleaner Manufacturer: Sealed Air Corporation Diversey, Inc.	1/8/10		N/A	Not Determined
39	AMAZING Manufacturer: Pro-Chem, Inc.	3/1/06		N/A	Not Determined
40	Ammonium Hydroxide (10 - 35% NH3) Ammonium Hydroxide Solutions; Ammonia Aqueous; Ammonia Solutions Manufacturer:	5/4/07		N/A	Not Determined

Appendix 3.7
Facilities Services Chemical List

Item No.	Product	Revision Date	Product CAS #	Last Verified	Regulatory Format
	Avantor Performance Materials Mallinckrodt - J.T. Baker, Inc.				
41	AMMONIUM NITRATE Nitric Acid, Ammonium Salt Manufacturer: Avantor Performance Materials Mallinckrodt - J.T. Baker, Inc.	5/4/07	6484-52-2	N/A	Not Determined
42	APAC Cove Base Adhesive Acrylic Emulsion Latex Adhesive Manufacturer: All Purpose Adhesive Company (APAC)	11/3/02		N/A	Not Determined
43	APPEEL NATURAL DEGREASER / DEODORIZER Manufacturer: Triple S	4/1/01		N/A	Not Determined
44	ARMAFLEX 520 ADHESIVE Manufacturer: Armacell LLC	5/10/15		5/16/16	GHS SDS, US ANSI
45	Aviation Gasoline Avgas 100LL Manufacturer: Chevron Corporation CHEVRON USA, INC.	2/26/08		N/A	Not Determined
46	BACTI-GARD (BTG) Manufacturer: ATLANTIC CHEMICAL/EQUIPMENT CO.	6/1/03		N/A	Not Determined
47	BANVEL Dimethylamine salt of dicamba Manufacturer: MICRO FLO COMPANY	7/19/99		N/A	Not Determined
48	Battery Fluid Acid Manufacturer: COLONIAL CHEMICAL CO	8/4/03		N/A	Not Determined
49	Bausch & Lomb Eye Wash Manufacturer: BAUSCH & LOMB	11/14/05		Discontinued	Not Determined
50	BAYGON 2% Bait Insecticide Manufacturer: Bayer CropScience AG	9/30/05		N/A	Not Determined
51	Benjamin Moore Flat Latex Paint Manufacturer: BENJAMIN MOORE & COMPANY	11/15/05		N/A	Not Determined
52	Benjamin Moore Fresh Start All Purpose 100% Acrylic Primer Latex paint Manufacturer: BENJAMIN MOORE & COMPANY	7/29/03		N/A	Not Determined
53	Bleach Manufacturer: Thermo Fisher Scientific Fisher Scientific International	11/20/08		Discontinued	Canadian WHMIS, EU MSDS, US ANSI
54	BLOOD BANK SALINE, BUFFERED Manufacturer: Thermo Fisher Scientific Fisher Diagnostics	10/3/05		N/A	Not Determined
55	B-NINE Daminozide Manufacturer: Chemtura Corporation	6/26/07		N/A	Not Determined
56	BORID POWDER ALL SIZES - EPA REGISTRATION # 9444-129 Manufacturer: Waterbury Companies, Inc.	9/25/02	10043-35-3	N/A	Not Determined
57	BRITE STAINLESS STEEL CLEANER Industrial/Institutional: Cleaning product. Manufacturer: S. C. Johnson & Son, Inc. Johnson Wax Professional	4/23/04		N/A	Not Determined
58	Brite Stripe Manufacturer: Pioneer Manufacturing Company	2/1/11		N/A	Not Determined
59	Bruce No Wax Floor Cleaner Manufacturer: Basic Coatings, Inc.	5/27/99		N/A	Not Determined
60	BU5004, Buffer Solution, pH 4.00 Potassium Hydrogen Phthalate In Water	5/1/06		N/A	Not Determined

Appendix 3.7
Facilities Services Chemical List

Item No.	Product	Revision Date	Product CAS #	Last Verified	Regulatory Format
	Manufacturer: Cannon Water Technology				
61	BU5007, Buffer Soln., pH 7.00 Potassium Manufacturer: Cannon Water Technology	5/1/06		N/A	Not Determined
62	BU5010, Buffer Soln., pH 10.00 Sodium Borate, Decahydrate In water Manufacturer: Cannon Water Technology	12/1/04		N/A	Not Determined
63	Buffer pH 7.0, Yellow Manufacturer: Millipore Corporation EMD Chemicals Inc.	8/23/06		N/A	Not Determined
64	Buffered Phthalate and Potassium Chloride Solution pH Senor Storage Solution Manufacturer: MYRON L COMPANY	2/8/06	877-24-7, 7447-40-7, 7732-18-5	N/A	Not Determined
65	BUILDERS SOLUTION Interior Flat Latex Paint Manufacturer: THE SHERWIN-WILLIAMS COMPANY Sherwin-Williams Company	4/19/07		N/A	Not Determined
66	Cal Stat Healthcare Personnel Handwash Manufacturer: Steris Corporation	1/29/03		N/A	Not Determined
67	Calcium Chloride Calcium Dichloride; Calcium Chloride Anhydrous; Caltac; Dowflake Manufacturer: Avantor Performance Materials Mallinckrodt - J.T. Baker, Inc.	11/9/07	10043-52-4	N/A	Not Determined
68	Cap Manufacturer: State Chemical Division – State Industrial Products	1/1/14		12/22/14	Canadian WHMIS, GHS SDS, US ANSI
69	Carefree Floor Finish Manufacturer: S. C. Johnson & Son, Inc. Johnson Wax Professional	5/25/05		N/A	Not Determined
70	CB Total Release PCO Fogger For Roaches With Esfenvalerate - EPA Registration 9444-166 Manufacturer: Waterbury Companies, Inc.	5/13/05		N/A	Not Determined
71	CB-80 Extra Insecticide - All Sizes - EPA Registration 9444-175 Manufacturer: Waterbury Companies, Inc.	1/8/08		N/A	Not Determined
72	CCL - Evaporator Coil Cleaner Manufacturer: ATLANTIC CHEMICAL/EQUIPMENT CO.	1/1/06		N/A	Not Determined
73	Champ Manufacturer: State Chemical Division – State Industrial Products	2/1/13		7/29/14	Canadian WHMIS, US ANSI
74	Chisel Gasket Remover solvent cleaner grey to Off-white aerosol Manufacturer: Henkel Corporation Loctite Corporation	2/14/05		N/A	Not Determined
75	CIRC-KLEEN 2 Electric Contact & Circuitry Cleaner Manufacturer: KIMBALL-MIDWEST	11/1/10		8/5/14	Not Determined
76	CIRC-KLEEN FREE Electric Contact & Switch Cleaner Manufacturer: KIMBALL-MIDWEST	1/1/06		11/17/15	Not Determined
77	Clorox Commercial Solutions Clorox Germicidal Wipes Manufacturer: The Clorox Company	1/5/15		5/16/16	GHS SDS, US ANSI
78	COBALT NITRATE Nitric Acid, Cobalt (2+), Hexahydrate; Cobalt Dinitrate Hexahydrate; Cobalt Nitrate Hexahydrate Manufacturer: Avantor Performance Materials Mallinckrodt - J.T. Baker, Inc.	2/23/06	10141-05-6, 10026-22-9	N/A	Not Determined
79	Cobalt(II) chloride hexahydrate Riedel Manufacturer: Sigma-Aldrich Corporation	1/11/08		N/A	Not Determined

Appendix 3.7
Facilities Services Chemical List

Item No.	Product	Revision Date	Product CAS #	Last Verified	Regulatory Format
80	Coil Brite / 1238 Manufacturer: Pro-Chem, Inc.	4/1/06		N/A	Not Determined
81	COMET CREME DISINFECTANT CLEANSER (Professional Line) Disinfecting Cleanser Manufacturer: Procter & Gamble	5/6/08		N/A	Not Determined
82	Copper(Ii) Sulfate, Reagentplus TM, 99% Sigma Manufacturer: Sigma-Aldrich Corporation	11/13/07	7758-98-7	N/A	Not Determined
83	Cresol Red Indicator Riedel Manufacturer: Sigma-Aldrich Corporation	1/29/06		N/A	Not Determined
84	Crest Nozzle Gel; Ultra Nozzle Gel Manufacturer: DynaFlux, Inc.	7/1/06		N/A	Not Determined
85	CREW BATHROOM CLEANER & SCALE REMOVER - USE SOLUTION Manufacturer: Sealed Air Corporation JohnsonDiversey	8/20/03	27177-77-1	N/A	Not Determined
86	Crew Bathroom Cleaner & Scale Remover (1:18 Use Dilution) Manufacturer: Sealed Air Corporation JohnsonDiversey	1/8/07		N/A	Not Determined
87	CREW NA SC NON-ACID BOWL & BATHROOM DISINFECTANT CLEANER Manufacturer: Sealed Air Corporation JohnsonDiversey	2/16/07		N/A	Not Determined
88	CREW TILE AND GROUT REJUVENATOR Manufacturer: S. C. Johnson & Son, Inc. Johnson Wax Professional	5/15/06		N/A	Not Determined
89	CREW URINAL SCREEN - FRESH Manufacturer: Sealed Air Corporation JohnsonDiversey	2/13/06	12179-04-3	N/A	Not Determined
90	Crystal Violet Indicator And For Microscopy Riedel Manufacturer: Sigma-Aldrich Corporation	2/2/07	548-62-9	N/A	Not Determined
91	CYCOCEL PLANT GROWTH REGULANT 2-Chloro-N,N.N.-Trimethylethanaminium Chloride, Chlormequat Chloride, CL38,555; CCC Manufacturer: OHP, INC.	6/14/06		5/14/15	Not Determined
92	D.I.B.S. Virex II 256 Detergent Disinfectant (1:256 use solution) Manufacturer: S. C. Johnson & Son, Inc. Johnson Wax Professional	9/8/05		N/A	Not Determined
93	DACONATE POST EMERGENCE HERBICIDE Manufacturer: Crop Care Australasia Pty Ltd.	4/1/98		N/A	Not Determined
94	DACONIL 2787 FLOWABLE FUNGICIDE Manufacturer: Syngenta Crop Protection Canada, Inc.	6/1/05	1897-45-6	N/A	Not Determined
95	Daconil Zn Manufacturer: Syngenta Crop Protection, Inc.	7/15/02	1897-45-6	N/A	Not Determined
96	DAP Weldwood Original Contact Cement Manufacturer: DAP Products Inc. DAP, INC.	12/30/99		N/A	Not Determined
97	DEMAND CS Manufacturer: AstraZeneca Zeneca Agricultural Products	6/17/00		1/7/15	Not Determined
98	DEMON EC Insecticide (Residential Dilution) Manufacturer: AstraZeneca Zeneca Agricultural Products	7/12/00		N/A	Not Determined
99	Demon Max a-cyano-(3-phenoxyphenyl)methyl-cis, trans-3-(2,2-dichloroethenyl)-2,2-dimethylcyclpropanecarboxylate Manufacturer: Syngenta Crop Protection, Inc.	12/15/05		N/A	Not Determined

Appendix 3.7
Facilities Services Chemical List

Item No.	Product	Revision Date	Product CAS #	Last Verified	Regulatory Format
100	Demon WP Manufacturer: AstraZeneca Zeneca Agricultural Products	8/6/98		N/A	Not Determined
101	DEXTROSE , ANHYDROUS D-Glucose, Anhydrous; Dextrosol; Dextrose U.S.P. Anhydrous; Corn Sugar; Grape Sugar Manufacturer: Avantor Performance Materials Mallinckrodt - J.T. Baker, Inc.	2/16/06	50-99-7	N/A	Not Determined
102	DIBS Stride Neutral Cleaner Manufacturer: S. C. Johnson & Son, Inc. Johnson Wax Professional	7/26/04		N/A	Not Determined
103	Diesel Fuel Supplement +Cetane Boost Manufacturer: Power Service Products, Inc.	12/16/09		N/A	Not Determined
104	Dixon Ultra or Universal Correction Fluids Manufacturer: DIXON TICONDEROGA CO	4/7/03		N/A	Not Determined
105	DOUBLE ACTION INSECTICIDE 260801; 75795; DOUBLE ACTION INSECTICIDE Manufacturer: ITW Professional Brands Dymon - ITW	1/1/03		N/A	Not Determined
106	DPD Free Chlorine Manufacturer: Nalco An Ecolab Company Nalco Company	8/3/05		N/A	Not Determined
107	DRAX PBS NUTRABAIT - EPA REGISTRATION Manufacturer: Waterbury Companies, Inc.	4/15/03		N/A	Not Determined
108	DRIONE INSECTICIDE Manufacturer: Bayer Corporation Bayer Environmental Science	1/25/11		3/10/16	US ANSI
109	Dursban 50W Insecticide in Water Soluble Packets Manufacturer: The Dow Chemical Company Dow AgroSciences	5/25/00		N/A	Not Determined
110	ELECTRICAL CONTACT CLEANER - PS Manufacturer: State Chemical Manufacturing Company	6/1/04		N/A	Not Determined
111	ELECTRO-GUARD Moisture and Corrosion Barrier Manufacturer: KIMBALL-MIDWEST	9/1/99		N/A	Not Determined
112	EMBARK Turf and Ornamental Growth Regulator Manufacturer: PBI - Gordon Corporation	3/20/13		2/17/15	US ANSI
113	EMPIRE 20 MICROENCAPSULATED INSECTICIDE Manufacturer: The Dow Chemical Company Dow AgroSciences	7/13/00		N/A	Not Determined
114	END BAC II SPRAY DISINFECTANT Manufacturer: S. C. Johnson & Son, Inc. Johnson Wax Professional	8/27/02		3/27/14	Not Determined
115	Epoleon N-7C Deodorizer Manufacturer: EPOLEON CORP	9/1/06		N/A	Not Determined
116	ES9470, Electrode Storage Solution Potassium Hydrogen Phthalate/Chloride In Water Manufacturer: Cannon Water Technology	12/1/04		N/A	Not Determined
117	Ethanol, Absolute Ethyl Alcohol; Ethyl Alcohol Anhydrous; Ethyl Hydrate; Ethyl Hydroxide; Fermentation Alcohol; Grain Alcohol; Methylcarbinol; Molasses Alcohol; Spirits of Wine Manufacturer: Thermo Fisher Scientific Fisher Scientific	3/18/03	64-17-5	N/A	Not Determined
118	Exhalt 800 Manufacturer: PBI - Gordon Corporation	12/14/94		N/A	Not Determined
119	EXPANDO Manufacturer: Pro-Chem, Inc.	4/1/06		N/A	Not Determined

Appendix 3.7
Facilities Services Chemical List

Item No.	Product	Revision Date	Product CAS #	Last Verified	Regulatory Format
120	Extend Rust Treatment LOCTITE SHARED FIELD (US/CANADA/EU) Manufacturer: Henkel Corporation	8/22/14		9/3/15	GHS SDS, US ANSI
121	EYE WASH Sterile Isotonic Buffered Solution Manufacturer: Altaire Pharmaceuticals, Inc.			8/15/14	Not Determined
122	EZ-Mix Granular Coil Cleaner For Evaporator or Condenser Coils Manufacturer: Specialty Chemical Company	5/1/07		N/A	Not Determined
123	FAST ORANGE WIPES 30 CT BUCKET Manufacturer: ITW Professional Brands Permatex, Inc.	3/14/07		3/1/16	Not Determined
124	FERRIC NITRATE Nitric Acid, Iron (3+) Salt Nonahydrate; Iron Nitrate Nonahydrate; Iron Trinitrate Manufacturer: Avantor Performance Materials Mallinckrodt - J.T. Baker, Inc.	11/10/05	10421-48-4, 7782-61-8	N/A	Not Determined
125	Ferro Ver Iron Reagent Manufacturer: Hach Company	12/3/01		N/A	Not Determined
126	FERROUS SULFATE Iron (II) sulfate (1:1)ç; Sulfuric Acid, Iron (2+) salt (1:1), Heptahydrate Manufacturer: Avantor Performance Materials Mallinckrodt - J.T. Baker, Inc.	5/4/07	7720-78-7	N/A	Not Determined
127	FOOD GRADE SILICONE Manufacturer: KIMBALL-MIDWEST	11/1/10		N/A	Not Determined
128	FOREMOST 2153-ES WONDER CLEANER Manufacturer: DELTA FOREMOST CHEMICAL CORPORATION	1/29/03		N/A	Not Determined
129	FREEDOM SPEED STRIPPER Manufacturer: S. C. Johnson & Son, Inc.	4/19/00		N/A	Not Determined
130	FREEDOM SPEED STRIPPER Manufacturer: S. C. Johnson & Son, Inc. Johnson Wax Professional	8/26/03		N/A	Not Determined
131	Freez-Kontr'l Monopropylene Glycol Manufacturer: Nu-Calgon Nu-Calgon Wholesalers, Inc.	6/22/06		N/A	Not Determined
132	Genetron 12 R-12, CFC-12 Manufacturer: Honeywell International Honeywell International, Inc.	9/12/12	75-71-8	Discontinued	US ANSI
133	Genetron 22 R-22, HCFC-22 Manufacturer: Honeywell International Versions: GHS+ Dated 04/03/2014	4/3/14	75-45-6	4/30/16	GHS SDS, US ANSI
134	Genetron 404A R-404A Manufacturer: Honeywell International Honeywell International, Inc.	6/4/14		5/12/16	GHS SDS, US ANSI
135	Genetron 408A Manufacturer: Honeywell International Honeywell International, Inc.	4/3/14		3/19/16	Canadian WHMIS, GHS SDS, US ANSI
136	Genetron 408A Manufacturer: Honeywell International	1/17/07		N/A	Not Determined
137	Genetron 500	1/8/15		5/19/16	Canadian WHMIS, GHS SDS, US ANSI

Item No.	Product	Revision Date	Product CAS #	Last Verified	Regulatory Format
	R-500 Manufacturer: Honeywell International Honeywell International, Inc.				
138	Genetron AZ-20 (R-410A) R-410A Manufacturer: Honeywell International Honeywell International, Inc.	9/11/13		4/25/16	US ANSI
139	Genetron MP39 R-401A Manufacturer: Honeywell International Honeywell, Burdick & Jackson (Formerly of AlliedSignal)	12/1/05		N/A	Not Determined
140	GLANCE AF SC Glass & Multi-Surface Cleaner Manufacturer: S. C. Johnson & Son, Inc. Johnson Wax Professional	1/8/03		N/A	Not Determined
141	GLANCE NA Manufacturer: Sealed Air Corporation JohnsonDiversey	7/25/07		N/A	Not Determined
142	Glycerol 1,2,3-Propanetriol; Gglycerin; Glycol Alcohol; Glycerol, Anhydrous Manufacturer: Avantor Performance Materials Mallinckrodt - J.T. Baker, Inc.	2/15/08	56-81-5	N/A	Not Determined
143	GOLD CHLORIDE TRIHYDRATE ACS REAGENT Aurate(1-), tetrachloro-, hydrogen, trihydrate (8Cl) * Aurate(1-), tetrachloro-, hydrogen, trihydrate, (SP-4-1)- (9Cl) * Auric chloride, hydrochloride, trihydrate * Gold acid chloride * Gold acid chloride trihydrate * CHLOROAURIC ACID TRIHYDRATE Manufacturer: Sigma-Aldrich Corporation SIAL	7/13/06	16961-25-4	N/A	Not Determined
144	GOOD SENSE FABRIC FRESHENER - USE Manufacturer: S. C. Johnson & Son, Inc. Johnson Wax Professional	8/5/04		N/A	Not Determined
145	GOOD SENSE HC - FRESH LIQUID AIR FRESHENER Manufacturer: Sealed Air Corporation JohnsonDiversey	5/15/06		N/A	Not Determined
146	Good Sense Odor Neutralizer Manufacturer: S. C. Johnson & Son, Inc. Johnson Wax Professional	5/1/03		N/A	Not Determined
147	Gordon's TRIMEC Plus Manufacturer: PBI - Gordon Corporation	12/12/01		4/6/16	Not Determined
148	Gram's Iodine Solution Sigma Manufacturer: Sigma-Aldrich Corporation	1/28/06		N/A	Not Determined
149	GRANT'S KILLS ANTS TOTAL ANT KILLER BAIT Insecticide Manufacturer: GRANT LABORATORIES, INC.	8/16/02	067485-29-4	N/A	Not Determined
150	GUM REMOVER Manufacturer: S. C. Johnson & Son, Inc. Johnson Wax Professional	2/5/05		N/A	Not Determined
151	Hazardous Components 1% or Greater; carcinogens 0.1% or Greater Manufacturer: Triple S	8/28/96		N/A	Not Determined
152	Heavy Duty Prespray Plus Manufacturer: S. C. Johnson & Son, Inc. Johnson Wax Professional	9/24/07		N/A	Not Determined
153	Heavy Duty Silicone Manufacturer: KIMBALL-MIDWEST Versions: Dated 11/01/2010	11/1/10		1/12/15	US ANSI
154	Henry 237 Acousti Gum Acoustical Ceiling Tile Adhesive Manufacturer: W.W. Henry Co.	11/1/98		N/A	Not Determined

Appendix 3.7
Facilities Services Chemical List

Item No.	Product	Revision Date	Product CAS #	Last Verified	Regulatory Format
155	HENRY 430 "ClearPro" Thin Spread Floor Tile Adhesive Manufacturer: W.W. Henry Co.	7/1/06		N/A	Not Determined
156	Henry 430 ClearPro Thin Spread Floor Tile Adhesive Manufacturer: W.W. Henry Co.	7/1/06		N/A	Not Determined
157	HORIZON 100 SC GLASS CLEANER (SUPER CONCENTRATE) Manufacturer: S. C. Johnson & Son, Inc. Johnson Wax Professional	4/23/03		5/2/16	Not Determined
158	HOUSEHOLD AMMONIA - PARSONS, BO PEEP HOUSEHOLD AMMONIA Manufacturer: Church & Dwight Company, Inc.	2/22/01		N/A	Not Determined
159	HYDROCHLORIC ACID (10%-33%) Hydrochloric Acid (Less Than 10%) Manufacturer: Avantor Performance Materials Mallinckrodt - J.T. Baker, Inc.	10/16/08	7647-01-0	N/A	Not Determined
160	Hydrochloric Acid, 17 to 37% Hydrogen Chloride Solution, Muriatic Acid Manufacturer: Jones-Hamilton, Inc.	1/28/08		N/A	Not Determined
161	Hydrogen Peroxide 3% Manufacturer: Vi-Jon Cumberland Swan	12/1/06	7722-84-1	2/11/15	Not Determined
162	HYDROGEN PEROXIDE SOLUTION 3% Hydrogen Dioxide Solution, 3%; Hydrogen Peroxide Topical Solution U.S.P Manufacturer: Avantor Performance Materials Mallinckrodt Baker, Inc.	3/28/11	7722-84-1	N/A	Not Determined
163	ICE MACHINE CLEANER Manufacturer: VAPCO PRODUCTS DIV.	12/28/05		N/A	Not Determined
164	ICE Off / 1261 Manufacturer: Pro-Chem, Inc.	4/1/06		N/A	Not Determined
165	Identity Largo Manufacturer: FLORATINE PRODUCTS GROUP	3/7/08		N/A	Not Determined
166	Instant Mildew Stain Remover Manufacturer: Triple S	4/1/01		N/A	Not Determined
167	INSTANT MILDEW STAIN REMOVER MILDEW STAIN REMOVER Manufacturer: Triple-S Chemical	4/1/01		N/A	Not Determined
168	Iodine Tincture Manufacturer: Science Stuff Inc	10/31/06		N/A	Not Determined
169	Isopropyl Alcohol (IPA) Manufacturer: Vi-Jon VI-JON LABORATORIES, INC. Versions: Dated 02/01/2007	2/1/07	67-63-0	6/10/15	Not Determined
170	ISOPROPYL ALCOHOL 70% 2-Propanol; Sec-Propyl Alcohol; Isopropanol; Sec-Propanol; Dimethylcarbinol Manufacturer: Avantor Performance Materials	3/24/11	67-63-0	N/A	Canadian WHMIS, US ANSI
171	JOMAR SEAL TIGHTER-THAN-TITE Manufacturer: JOMAR INTERNATIONAL	1/20/94		N/A	Not Determined
172	J-SPRAY GP FORWARD H.D. G.P. CLEANER - USE Manufacturer: S. C. Johnson & Son, Inc. Johnson Wax Professional	12/17/02		N/A	Not Determined
173	J-WORKS LOW FOAMING GENERAL PURPOSE CLEANER 535 Industrial/Institutional: Cleaning product. Manufacturer: Sealed Air Corporation JohnsonDiversey	1/28/03		N/A	Not Determined
174	Kelthane 50 WSP Miticide	6/1/01		N/A	Not Determined

Item No.	Product	Revision Date	Product CAS #	Last Verified	Regulatory Format
	Manufacturer: The Dow Chemical Company Dow AgroSciences				
175	KEY Tite Joint Compound Manufacturer: Cooper Cameron Corporation	2/17/00		12/30/13	Not Determined
176	KICKER Manufacturer: Bayer Corporation Bayer Environmental Science	12/8/10		1/20/16	US ANSI
177	KILZ Casual Colors Int/Ext Stainblocking Primer-Sealer Manufacturer: Masterchem Industries LLC Masterchem Industries, Inc.	2/13/03		N/A	Not Determined
178	KIV-CON 44 AEROSOL Manufacturer: NCH Corporation Mantek - Division of NCH	4/30/92		N/A	Not Determined
179	LawnPlex Manufacturer: NOVOZYMES BIOLOGICALS, INC.	8/13/04		N/A	Not Determined
180	LEAD NITRATE Lead (Ii) Nitrate (1:1); Lead Dinitrate; Nitric Acid, Lead (2+) Manufacturer: Avantor Performance Materials Mallinckrodt - J.T. Baker, Inc.	2/13/06	10099-74-8	N/A	Not Determined
181	Lead, Shot, 99.9% Manufacturer: Johnson Matthey	8/3/98	7439-92-1	N/A	Not Determined
182	LECTRA MOTIVE ELECTRIC PARTS CLEANER (BULK) Manufacturer: CRC Industries, Inc.	1/9/07		N/A	Not Determined
183	Lees Neofloor Adhesive Manufacturer: Lees Commercial Carpet Co.	7/6/01		N/A	Not Determined
184	Lemon Juice Manufacturer: FLINN SCIENTIFIC INC	4/25/11		N/A	Not Determined
185	LIGHTWEIGHT SPACKLING PASTE - Spackling Compound Manufacturer: DAP Products Inc. DAP, INC.	4/7/00		N/A	Not Determined
186	Liquid Ice Machine Cleaner Phosphoric Acid Manufacturer: Nu-Calgon Nu-Calgon Wholesalers, Inc.	6/22/06		N/A	Not Determined
187	Liquid Scale Dissolver Acidic Solution Manufacturer: Nu-Calgon Nu-Calgon Wholesaler, Inc.	3/5/12	7647-01-0	4/25/16	Canadian WHMIS, US ANSI
188	LIQUID SCOURING CREME Manufacturer: Triple S	2/7/14		8/11/15	US ANSI
189	Little John Manufacturer: NAVY BRAND MFG CO	5/29/05		N/A	Not Determined
190	LITTLE JOHN BOWL CLEANER PORCELAIN BOWL CLEANER Manufacturer: NAVY BRAND MFG CO	6/11/84		N/A	Not Determined
191	Loctite 587Blue High Performance RTV(58730) Manufacturer: KIMBALL-MIDWEST	8/1/04		N/A	Not Determined
192	Lysol Brand Disinfectant Deep Reach Toilet Bowl Cleaner (Liquid) Manufacturer: Reckitt Benckiser Reckitt Benckiser, Inc.	8/1/07		N/A	Not Determined
193	Mach 2 1.5 G Insecticide Manufacturer: The Dow Chemical Company Dow AgroSciences	3/19/02		N/A	Not Determined
194	MAGNESIUM METAL, TURNINGS AND RIBBON Magnesium Ribbon, Magnesium Clipping, Magnesium Turnings	6/14/07	7439-95-4	N/A	Not Determined

Item No.	Product	Revision Date	Product CAS #	Last Verified	Regulatory Format
	Manufacturer: Avantor Performance Materials Mallinckrodt - J.T. Baker, Inc.				
195	MANGANESE DIOXIDE Manganese Black; Manganese Peroxide; Manganese (Vi) Oxide; Cement Black Manufacturer: Avantor Performance Materials Mallinckrodt - J.T. Baker, Inc.	2/15/08	1313-13-9	N/A	Not Determined
196	Max Supreme Manufacturer: Pioneer Manufacturing Company	2/1/11		5/14/15	Not Determined
197	Methyl Alcohol Wood Alcohol; Methanol; Carbinol Manufacturer: Avantor Performance Materials Mallinckrodt - J.T. Baker, Inc.	5/4/07	67-56-1	N/A	Not Determined
198	Methyl Orange Indicator, REAG. PH. EUR. Riedel Manufacturer: Sigma-Aldrich Corporation	7/5/06	547-58-0	N/A	Not Determined
199	Methyl Red Indicator Solution Methyl Red in Alcohol Manufacturer: Thermo Fisher Scientific Fisher Scientific International	5/29/08	67-63-0	N/A	Canadian WHMIS, EU MSDS, US ANSI
200	Micro Time Mist With Odor Counteractant -All Fragrances (30% VOC Compliant) Manufacturer: Waterbury Companies, Inc.	3/19/01		N/A	Not Determined
201	Motive Power Crystal Synthetic Grease-14 oz. Cartridge Manufacturer: KIMBALL-MIDWEST	9/1/05		N/A	Not Determined
202	Mr Clean Magic Eraser original, Duo, Extra Strength Manufacturer: Procter & Gamble	5/9/06		11/18/13	Not Determined
203	N- (Mercaptomethyl)Phthalimide, S-(O,O-Dimethyl Phosphorodithioate) Manufacturer: Gowan Company	2/22/07	732-11-6	N/A	Not Determined
204	Nalco 1720 Oxygen Scavenger Manufacturer: Nalco Canada Co.	5/4/07		N/A	Not Determined
205	Nalco 2584 Manufacturer: Nalco An Ecolab Company Nalco Company Versions: Dated 06/27/2012	6/27/12		7/14/15	US ANSI
206	NALCO 2811 PULV Manufacturer: Nalco An Ecolab Company Nalco Company	6/27/12	7757-83-7	N/A	US ANSI
207	Nalco 2826 Manufacturer: Nalco An Ecolab Company Nalco Company	2/21/04		N/A	Not Determined
208	Nalco 2828 Plus Manufacturer: Nalco An Ecolab Company Nalco Company	7/31/09		7/14/15	Canadian WHMIS, US ANSI
209	Nalco 2840 Manufacturer: Nalco An Ecolab Company Nalco Company	7/15/11		4/1/15	Not Determined
210	Nalco 460-S0121A SOLN HTD Hardness Indicator REAGENT Manufacturer: Nalco An Ecolab Company Nalco Chemical Company	5/30/05	102-71-6	N/A	Not Determined
211	Nalco 460-S0770 SOLN N-1 Indicator Form Liquid INDICATOR LIQUID Manufacturer: Nalco An Ecolab Company Nalco Chemical Company	8/9/04		N/A	Not Determined
212	Nalco 7346	7/6/10		Discontinue	US ANSI

Appendix 3.7
Facilities Services Chemical List

Item No.	Product	Revision Date	Product CAS #	Last Verified	Regulatory Format
	Manufacturer: Nalco An Ecolab Company Nalco Company Versions: Dated 07/06/2010			d	
213	Nalco 7346 TAB Manufacturer: Nalco An Ecolab Company Nalco Company	10/7/15		4/19/16	GHS SDS, US ANSI
214	Nalco 90005 Manufacturer: Nalco An Ecolab Company Nalco Company	2/9/15		3/17/16	GHS SDS, US ANSI
215	Nalco-460-S0771 SolN N-2 Titrant ,Form Liquid REAGENT Manufacturer: Nalco An Ecolab Company Nalco Chemical Company	2/29/04		N/A	Not Determined
216	NEUTRALIZER / CONDITIONER Manufacturer: S. C. Johnson & Son, Inc. Johnson Wax Professional	5/1/02	77-92-9	N/A	Not Determined
217	NexGuard 22310 Manufacturer: Nalco An Ecolab Company Nalco Company Versions: ANSI Dated 11/06/2014	11/6/14		4/19/16	GHS SDS, US ANSI
218	NexGuard 22352 Manufacturer: Nalco An Ecolab Company Nalco Company	7/22/14		5/1/15	GHS SDS, US ANSI
219	No. 5092 Gama-Mene X-14 Aero Manufacturer: HILL MFG CO,INC	11/27/06		N/A	Not Determined
220	Nokorode Soldering paste FLUX, SOLDERING Manufacturer: M.W. Dunton	1/1/99		4/1/15	Not Determined
221	Nutra Clean Nutra Clean Manufacturer: Fortech Products by Formula Corporation	9/1/01		N/A	Not Determined
222	Oatey All purpose Cement Manufacturer: Oatey Company	10/1/09		N/A	Not Determined
223	Oatey All-Weather PVC Cement PVC Plastic Pipe Cement Manufacturer: Oatey Company	2/1/86		N/A	Not Determined
224	Oatey Clear Cleaner PVC/CPVC Clear Cleaner - Primer Manufacturer: Oatey Company	5/20/05	78-93-3	N/A	Not Determined
225	Oatey Flowguard Gold All Weather Lo-Voc 1-Step Cement CPVC Resin in Solvent Solution, CPVC Plastic Pipe Cement Manufacturer: Oatey Company	5/19/04		N/A	Not Determined
226	OATEY HEAVY DUTY GRAY LO-VOC PVC CEMENT PVC Resin in Solvent Solution, PVC Plastic Pipe Cement Manufacturer: Oatey Company	5/20/04		N/A	Not Determined
227	Oatey No. 95 Tinning Flux - Lead Free Flux For Soldering Copper Pipe Manufacturer: Oatey Company	11/3/06		N/A	Not Determined
228	Oatey Plumber's Putty Putty Manufacturer: Oatey Company	6/10/05		N/A	Not Determined

Appendix 3.7
Facilities Services Chemical List

Item No.	Product	Revision Date	Product CAS #	Last Verified	Regulatory Format
229	OATEY PVC REGULAR CLEAR CEMENT PVC Plastic Pipe Cement Manufacturer: Oatey Company	10/1/09		N/A	Not Determined
230	Odorized Commercial Propane Propane, Dimethylmethane, LP-Gas, Liquefied Petroleum Gas (LPG), Propyl Hydride Manufacturer: Blue Rhino Corporation	4/1/10		1/18/16	US ANSI
231	Organic Mixture WD-40 Bulk Liquid Manufacturer: WD-40 Company	3/5/09		N/A	Not Determined
232	ORIGINAL SHINE-UP (READY-TO-USE) Manufacturer: S. C. Johnson & Son, Inc. Johnson Wax Professional	8/28/02		N/A	Not Determined
233	ORTHENE 97 PELLETS Manufacturer: Valent USA Corporation	5/30/00		N/A	Not Determined
234	ORTHO HOME DEFENSE MAX READY-TO-USE INSECT KILLER Insecticide Manufacturer: The ORTHO Group	6/8/04		N/A	Not Determined
235	OXALIC ACID Ethanedioic Acid, Dihydrate; Oxalic Acid Dihydrate Manufacturer: Avantor Performance Materials Mallinckrodt - J.T. Baker, Inc.	1/16/06	144-62-7, 6153-56-6	N/A	Not Determined
236	PAINT, OIL & GREASE SPOTTER GEL Manufacturer: S. C. Johnson & Son, Inc. Johnson Wax Professional	11/23/04		N/A	Not Determined
237	Pararosaniline Chloride (0.2% in .1M Hydrochloric Acid) Basic Red 9; Magenta; Solvent Red 41; C.I. 42500 Manufacturer: Acros Organics N.V.	10/3/05		N/A	Not Determined
238	Penetrating Lubricant Manufacturer: Pro-Chem, Inc.	1/1/07		N/A	Not Determined
239	Penetrox A2 Manufacturer: CONTINENTAL PRODUCTS INC	4/1/06		N/A	Not Determined
240	Permatex Anti-Seize Lubricant 133MA Manufacturer: ITW Professional Brands Permatex - Loctite Corporation	7/30/96		N/A	Not Determined
241	PHENOL RED, SODIUM SALT Phenol Red, Indicator Grade (Water Soluble); Phenolsulfonphthalein Sodium Salt; 4,4"-(3h-2,1-Benzoxathiol-3-Ylidene) Bis-Phenol, S,S-Dioxide, Sodium Salt Manufacturer: Avantor Performance Materials Avantor Performance Materials, Inc.	6/25/14	34487-61-1	5/19/16	GHS SDS, US ANSI
242	PHENOLPHTHALEIN 1% IN 50% ALCOHOL 3,3-Bis(P-Hydroxyphenyl) Phthalide Indicator Solutions; Phenolphthalein 1% Solution Manufacturer: Avantor Performance Materials Mallinckrodt - J.T. Baker, Inc.	7/6/06		N/A	Not Determined
243	PHOSPHORIC ACID Ortho-Phosphoric Acid; White Phosphoric Acid Manufacturer: Avantor Performance Materials Mallinckrodt - J.T. Baker, Inc.	11/21/08	7664-38-2	N/A	Not Determined
244	Potassium Chloride in Water Manufacturer: Cannon Water Technology	4/1/06		N/A	Not Determined
245	Potassium Chloride in Water Manufacturer: Cannon Water Technology	7/1/05		N/A	Not Determined
246	Potassium Hydrogen Phthalate Sigmaltra Sial Manufacturer: Sigma-Aldrich Corporation	2/1/06		N/A	Not Determined
247	POTASSIUM HYDROXIDE Caustic Potash; Potassium Hydrate Manufacturer: Avantor Performance Materials	2/1/07	1310-58-3	N/A	Not Determined

Item No.	Product	Revision Date	Product CAS #	Last Verified	Regulatory Format
	Mallinckrodt - J.T. Baker, Inc.				
248	POTASSIUM IODIDE Potide; Hydriodic Acid, Potassium Salt; Iodic Acid, Potassium Salt Manufacturer: Avantor Performance Materials Mallinckrodt - J.T. Baker, Inc.	11/9/06	7681-11-0	N/A	Not Determined
249	POTASSIUM PERMANGANATE Permanganic Acid, Potassium Salt, Condy;s Crystals Manufacturer: Avantor Performance Materials Mallinckrodt - J.T. Baker, Inc.	2/13/06		N/A	Not Determined
250	POTASSIUM THIOCYANATE Potassium Sulfocyanate; Potassium Thiocyanide; Thiocyanic Acid, Potassium Salt; Potassium Isothiocyanate Manufacturer: Avantor Performance Materials Mallinckrodt - J.T. Baker, Inc.	1/25/06	333-20-0	N/A	Not Determined
251	Pramitol 25E Herbicide Prometon (25%):2,4-bis(isopropylamino)-6-methoxy-s-triazine Manufacturer: Makhteshim-Agan	4/14/04	1610-18-0	N/A	Not Determined
252	Pre-Empt Professional Cockroach Gel Bait - EPA Registration 432-1365-9444 Manufacturer: Waterbury Companies, Inc.	3/8/05		N/A	Not Determined
253	PREMIUM (HIGH) VACUUM PUMP OIL Manufacturer: ROBINAIR - SPX Corporation	2/10/06		N/A	Not Determined
254	Prentox Exciter Manufacturer: Prentiss Incorporated	5/23/03		N/A	Not Determined
255	PRESCRIPTION TREATMENT brand 960 VECTOR Fruit Fly Trap Manufacturer: Whitmire Micro-Gen	10/25/06		N/A	Not Determined
256	PRESCRIPTION TREATMENT brand AVERT Cockroach Gel Bait Formula 2 Manufacturer: Whitmire Micro-Gen	9/20/05		N/A	Not Determined
257	Prescription Treatment brand CY-KICK Crack & Crevice Pressurized Residual Manufacturer: Whitmire Micro-Gen	12/12/06		N/A	Not Determined
258	Prescription Treatment brand PRO-CONTROL Plus Total Release Aerosol Insecticide Formula 1 Manufacturer: Whitmire Micro-Gen	10/26/06		N/A	Not Determined
259	Prescription Treatment Brand Pro-Control Total Relase Aerosol Insecticide Formula 1 Manufacturer: Whitmire Micro-Gen	6/21/06		N/A	Not Determined
260	Prime Time / 1630 Manufacturer: Pro-Chem, Inc.	5/1/06		N/A	Not Determined
261	PRO LUBE A high temperature brush top protective lubricant Manufacturer: State Chemical Manufacturing Company	8/1/03		N/A	Not Determined
262	Pro Therm RV Heat Transfer Fluid Manufacturer: Specialty Chemical Company	9/30/04		N/A	Not Determined
263	Promaster Paint Thinner Manufacturer: PPG Industries, Inc.	2/10/08		N/A	Not Determined
264	PROTEK-PG-100 - Heat Transfer Fluid Manufacturer: SPECIALTY CHEMICAL MFG INC	7/20/05		N/A	Not Determined
265	Pro-Treat 350 Manufacturer: Wagner Manufacturing	7/26/07		N/A	Not Determined
266	QUIN-CIP Compressor Lubricant Manufacturer: Quincy Compressor	2/21/94		N/A	Not Determined
267	QUIX MULTIPURPOSE CLEANING FOODSERVICE TOWEL Manufacturer: PGI Nonwovens Chicopee Inc	11/26/01		N/A	Not Determined
268	RCD #52 Spray Adhesive Manufacturer: RCD CORP	8/4/00		N/A	Not Determined
269	Re Nu / 2615 Manufacturer:	2/1/06		N/A	Not Determined

Item No.	Product	Revision Date	Product CAS #	Last Verified	Regulatory Format
	Pro-Chem, Inc.				
270	Reagent Alcohol Doubly Denatured Ethanol; Modified 3a Alcohol; Alcohol, Anhydrous Manufacturer: Avantor Performance Materials Mallinckrodt - J.T. Baker, Inc.	2/16/06		N/A	Not Determined
271	RED SPEC Manufacturer: CONTINENTAL RESEARCH CORP	8/25/10		10/15/14	Not Determined
272	Revolver Herbicide Manufacturer: Bayer Corporation Bayer Environmental Science	4/15/11		8/18/15	Not Determined
273	RH-72648 Dithane SR-958-8 Flow DG Manufacturer: The Dow Chemical Company Dow AgroSciences	8/3/06		N/A	Not Determined
274	RIDGID DARK THREAD CUTTING OIL Manufacturer: RIDGE TOOL COMPANY	5/27/09		N/A	Not Determined
275	RIDGID DARK THREAD CUTTING OIL Manufacturer: RIDGE TOOL COMPANY	5/29/15		6/8/16	GHS SDS, US ANSI
276	RIDGID PREMIUM DARK THREAD CUTTING OIL Manufacturer: Ridgid	5/1/04		N/A	Not Determined
277	ROCK SALT Manufacturer: BRODY CHEMICAL COMPANY	9/28/00		N/A	Not Determined
278	RONSTAR G HERBICIDE Manufacturer: Bayer Corporation Bayer Environmental Science Versions: Dated 09/07/2010	9/7/10		5/5/15	US ANSI
279	Roskote R 28 Rubberized Mastic Manufacturer: CHASE CORP. - ROYSTON DIVISION	1/20/10		N/A	Not Determined
280	RP-3 Undercoating Manufacturer: State Chemical Division – State Industrial Products			N/A	Not Determined
281	Rubberized Undercoating Manufacturer: CONTINENTAL PRODUCTS INC	7/17/01		N/A	Not Determined
282	Rust Buster / 2604 Manufacturer: Pro-Chem, Inc.	3/1/06		N/A	Not Determined
283	RX11-FLUSH Manufacturer: Nu-Calgon Nu-Calgon Wholesaler, Inc.	1/8/13		N/A	US ANSI
284	Safranin Stain Mixture Manufacturer: Thermo Fisher Scientific Fisher Scientific	10/31/07		N/A	Not Determined
285	Seal-Pak TEFLON FLAKE Manufacturer: NCH Corporation Mantek - Division of NCH	2/13/90		9/4/15	Not Determined
286	Secohypo Anhydrous and Sodium Thiosulfate Pentahydrate Sodium Thiosulfate Anhydrous, Sodium Hyposulfite; "hypo"; Sodium Thiosulfate Crystal; Prismatic Rice Manufacturer: Esseco USA LLC	12/1/13		3/7/16	Canadian WHMIS, GHS SDS, US ANSI
287	Sheetrock Lightweight All-Purpose Joint Compound Total Lite Manufacturer: United States Gypsum Company	7/6/04		N/A	Not Determined
288	Silver Nitrate Lunar Caustic; Silver Nitrate Toughened; Nitric Acid, Silver (I) Salt Manufacturer: Avantor Performance Materials	11/21/08	7761-88-8	N/A	Not Determined

Appendix 3.7
Facilities Services Chemical List

Item No.	Product	Revision Date	Product CAS #	Last Verified	Regulatory Format
	Mallinckrodt - J.T. Baker, Inc.				
289	Skidoo / 1736 Manufacturer: Pro-Chem, Inc.	3/1/07		N/A	Not Determined
290	SNAPBACK SPRAY BUFF (LIQUID) Manufacturer: Sealed Air Corporation JohnsonDiversey, Inc.	6/12/09		N/A	US ANSI
291	SNOW & ICE MELTER Manufacturer: BRODY CHEMICAL COMPANY	9/28/00		N/A	Not Determined
292	Sodium Bicarbonate Baking Soda, Bicarbonate of Soda Manufacturer: FMC Corporation FMC Wyoming Corporation - Alkali Chemicals Division	1/7/14	144-55-8	5/10/16	US ANSI
293	Sodium Bicarbonate Baking Soda, Bicarbonate of Soda Manufacturer: Natural Soda, Inc.	6/4/15	144-55-8	4/26/16	GHS SDS, US ANSI
294	SODIUM CARBONATE, ANHYDROUS Soda Ash, Sodium Carbonate; Carbonic acid, disodium salt; Disodium carbonate Manufacturer: FMC Corporation FMC Wyoming Corporation - Alkali Chemicals Division	5/7/14	497-19-8	3/10/16	EU MSDS, GHS SDS, US ANSI
295	SODIUM CHLORIDE Salt; Rock Salt; Saline; Table Salt Manufacturer: Avantor Performance Materials Mallinckrodt - J.T. Baker, Inc.	11/9/06		N/A	Not Determined
296	SODIUM FLUORIDE Floridine; sodium monofluoride; disodium difluoride; natrium fluoride; Florocid Manufacturer: Avantor Performance Materials Mallinckrodt - J.T. Baker, Inc.	11/26/07	7681-49-4	N/A	Not Determined
297	SODIUM HYDROXIDE Caustic Soda; Lye; Sodium Hydroxide Solid; Sodium Hydrate Manufacturer: Avantor Performance Materials Mallinckrodt - J.T. Baker, Inc.	5/4/07	1310-73-2	N/A	Not Determined
298	Sodium Hydroxide, 2.0M (2.0N) Sodium hydroxide water solution Manufacturer: ScholAR Chemistry	12/1/05		N/A	Not Determined
299	Sodium Hypochlorite Solution Sodium Hypochlorite Manufacturer: JCI Jones Chemicals, Inc.	12/11/08	7681-52-9	N/A	Not Determined
300	SODIUM PHOSPHATE, 96% Aldrich Manufacturer: Sigma-Aldrich Corporation	2/1/06	7601-54-9	N/A	Not Determined
301	SOIL RELEASE/BONNET BUFF SC (SUPER CONCENTRATE) Manufacturer: S. C. Johnson & Son, Inc. Johnson Wax Professional	4/4/03		N/A	Not Determined
302	SPITFIRE NB SC Manufacturer: S. C. Johnson & Son, Inc. Johnson Wax Professional	5/29/07		N/A	Not Determined
303	Sporicidin Antimicrobial Lotion Soap Manufacturer: American Air & Water, Inc.			N/A	Not Determined
304	SSS CHALKBOARD AND WHITEBOARD CLEANER Manufacturer: Triple-S Chemical	9/11/01		N/A	Not Determined
305	SSS DOUBLE ACTION CRACK & CREVICE RESIDUAL INSECTICIDE Manufacturer: Triple-S Chemical	9/20/00		N/A	Not Determined
306	SSS ENZYME DEODORANT Manufacturer: Triple-S Chemical	12/1/00		N/A	Not Determined
307	SSS FOAM DISINFECTANT CLEANER Manufacturer: Triple-S Chemical	2/25/97		N/A	Not Determined

Appendix 3.7
Facilities Services Chemical List

Item No.	Product	Revision Date	Product CAS #	Last Verified	Regulatory Format
308	SSS Foam Disinfectant Cleaner Manufacturer: Triple S	1/10/00		8/5/15	US ANSI
309	SSS FOAM ELIMINATOR DEFOAMER Manufacturer: Triple-S Chemical	6/7/99		N/A	Not Determined
310	SSS P.S.T. TOILET BOWL/PORCELAIN/SHOWER TILE CLEANER Manufacturer: Triple-S Chemical	5/17/01		N/A	Not Determined
311	SSS READY TO USE BIO-ENZYMATIC SPOTTER BIO-ENZYMATIC ODOR DIQESTER Manufacturer: Triple-S Chemical	1/9/01		N/A	Not Determined
312	Sta Put Manufacturer: Oatey Company HERCULES CHEMICAL CO., INC.	1/25/10		N/A	Not Determined
313	Starch Solution Ready-For-Use In Saturat ED Salt Solution Riedel Manufacturer: Sigma-Aldrich Corporation	2/2/06		N/A	Not Determined
314	STENCH AND STAIN DIGESTER Industrial/Institutional: Carpet care Manufacturer: S. C. Johnson & Son, Inc. Johnson Wax Professional	4/4/03		N/A	Not Determined
315	STRIDE CITRUS HC (HYPERCONCENTRATE) Manufacturer: S. C. Johnson & Son, Inc. Johnson Wax Professional	5/19/06		N/A	Not Determined
316	STRIDE CITRUS HC (HYPERCONCENTRATE) Manufacturer: Sealed Air Corporation JohnsonDiversey	5/19/06		N/A	Not Determined
317	Stride Fragrance Free SC Neutral Cleaner Manufacturer: S. C. Johnson & Son, Inc. Johnson Wax Professional	2/2/06		N/A	Not Determined
318	SULFURIC ACID, 52 - 100 % Oil Of Vitriol; Babcock Acid; Sulphuric Acid Manufacturer: Avantor Performance Materials Mallinckrodt - J.T. Baker, Inc.	11/9/07	7664-93-9	N/A	Not Determined
319	SUPER SANI CLOTH GERMICIDAL DISPOSABLE WIPE Manufacturer: NICE-PAK PRODUCTS, INC. PDI-Professional Disposables, Inc	6/1/04		N/A	Not Determined
320	SURE SHOT PLUS Manufacturer: Triple S	2/12/98		N/A	Not Determined
321	Sure-Vue RPR 100Test, Sure-Vue RPR 500Test, Sure-Vue RPR 1:16 Titer Control 1.5 ml, Sure-Vue RPR Controls 3x1.5 ml Manufacturer: BioKit USA Inc	9/7/06		N/A	Not Determined
322	Surf AC 820 Non-ionic surfactant Manufacturer: DREXEL CHEMICAL COMPANY	11/14/12		12/15/14	US ANSI
323	Surflan A.S. 3,5-Dinitro-N4, -N4-Dipropylsulfanilamide, Oryzalin Manufacturer: Southern Agricultural Insecticides, Inc.	2/1/98		N/A	Not Determined
324	SUSPEND SC INSECTICIDE Manufacturer: Bayer Corporation Bayer Environmental Science Versions: Dated 01/29/2007	1/29/07		5/6/15	US ANSI
325	Swipes / 2236 Manufacturer: Pro-Chem, Inc.	3/1/06		N/A	Not Determined
326	Talstar Select Insecticide	1/17/08		N/A	Not Determined

Appendix 3.7
Facilities Services Chemical List

Item No.	Product	Revision Date	Product CAS #	Last Verified	Regulatory Format
	FMC 54800; (2-Methyl[1,1"-Biphenyl]-3-yl)methyl 3-(2-Chloro-3,3,3-Trifluoro-1-Propenyl)-2,2-Dimethylcyclopropanecarboxylate; IUPAC: 2-Methylbiphenyl-3-ylmethyl (Z)-(IRS)-cis-3-(2-Chloro-3,3,3-Trifluoroprop-1-enyl)-2,2-Dimethylcyclopropanecarboxylate Manufacturer: FMC Corporation				
327	TANNIN STAIN REMOVER Manufacturer: S. C. Johnson & Son, Inc. Johnson Wax Professional	1/15/02		N/A	Not Determined
328	TAURUS Floor STripper Manufacturer: Triple-S Chemical	4/1/01		N/A	Not Determined
329	TEFLA-PENT Manufacturer: CONTINENTAL RESEARCH CORP	3/4/15		4/6/16	GHS SDS, US ANSI
330	Tempo 20 WP Insecticide Manufacturer: Bayer Corporation Bayer Environmental Science	2/1/08		2/28/14	Not Determined
331	Tempo SC Ultra Insecticide Manufacturer: Bayer Corporation Bayer Environmental Science Versions: Dated 08/29/2008	8/29/08		3/23/15	US ANSI
332	TETRACHLORO-1,4-BENZOQUINONE, 99% 1,4-Benzoquinone, 2,3,5,6-tetrachloro- * Chloranil * Dow Seed Disinfectant No. 5 * ENT 3,797 * G-25804 * G-444E * Geigy-444E * Reranil * Spergon * Spergon I * Spergon technical * Tetrachlorobenzoquinone * Tetrachloro-p-benzoquinone Manufacturer: Sigma-Aldrich Corporation	2/2/07	118-75-2	N/A	Not Determined
333	Thymol Blue Indica Riedel Manufacturer: Sigma-Aldrich Corporation	2/1/06		N/A	Not Determined
334	Thymol Blue Indicator Riedel Manufacturer: Sigma-Aldrich Corporation	2/1/06	76-61-9	N/A	Not Determined
335	Titebond II Dark Wood Glue Manufacturer: Franklin International	4/26/07		N/A	Not Determined
336	Toolube Cutting Tool Lubricant lubricant Manufacturer: RED LION RESEARCH	2/18/98		N/A	Not Determined
337	TOTALINE ICE MACHINE CLEANER Manufacturer: NORTH AMERICAN RESEARCH CORPORATION	1/21/98		N/A	Not Determined
338	Trasar 23208 Cooling Wtr Inhib Manufacturer: Nalco An Ecolab Company Nalco Company	4/5/06		N/A	Not Determined
339	Trasar 23234 Manufacturer: Nalco An Ecolab Company Nalco Company	8/14/14		8/14/14	GHS SDS, US ANSI
340	Tri-Act 1820 Manufacturer: Nalco An Ecolab Company Nalco Company	11/6/14		3/17/16	GHS SDS, US ANSI
341	TURBO Manufacturer: COASTWIDE LABORATORIES	3/1/06		N/A	Not Determined
342	UHS SC FLOOR CLEANER - USE SOLUTION Manufacturer: S. C. Johnson & Son, Inc. Johnson Wax Professional	8/6/03		N/A	Not Determined
343	Ultra Rubberized Undercoat Manufacturer: KIMBALL-MIDWEST	9/1/99		N/A	Not Determined

Appendix 3.7
Facilities Services Chemical List

Item No.	Product	Revision Date	Product CAS #	Last Verified	Regulatory Format
344	UNITED 166 POWER UP Manufacturer: United Laboratories Inc.	5/20/15		5/31/16	GHS SDS, US ANSI
345	United 265 Extra Strength Concentrate Industrial Descaler Industrial Descaler Manufacturer: United Laboratories Inc.	3/19/07	7647-01-0	N/A	Not Determined
346	United 323 Closed Loop Chiller System Treatment Manufacturer: United Laboratories Inc.	3/10/99		N/A	Not Determined
347	United 355 COIL-ZYME Enzymatic Coil Cleaner Manufacturer: United Laboratories Inc.	4/3/06		N/A	Not Determined
348	UNITED 593 CITRAIN Manufacturer: United Laboratories Inc.	9/28/11		N/A	US ANSI
349	United 629 Grunge Grippers Manufacturer: United Laboratories Inc.	11/10/15		3/17/16	GHS SDS, US ANSI
350	UNITED 756 LIFT-ZYME Manufacturer: United Laboratories Inc.	2/24/15		11/12/15	US ANSI
351	UNITED 77 BIATRON Organic Digester and Liquid Drain Cleaner Manufacturer: United Laboratories Inc.	6/1/15		5/31/16	GHS SDS, US ANSI
352	Universal Indicator Solution (S75017) Universal pH Indicator Manufacturer: Thermo Fisher Scientific Fisher Scientific International	5/29/08		N/A	Not Determined
353	Vinegar Manufacturer: FLINN SCIENTIFIC INC	1/16/14	64-19-7	4/25/16	GHS SDS, US ANSI
354	VIREX 256 Manufacturer: S. C. Johnson & Son, Inc. S.C. JOHNSON WAX	10/11/91		N/A	Not Determined
355	VIREX II 256 Manufacturer: S. C. Johnson & Son, Inc. Johnson Wax Professional	7/28/04		N/A	Not Determined
356	VIREX II 256 Manufacturer: Sealed Air Corporation JohnsonDiversey	3/3/08		2/4/14	Not Determined
357	VOBAN VOMITUS ABSORBENT Manufacturer: FRANK MILLER & SONS, INC.	5/18/15		5/26/16	GHS SDS, US ANSI
358	WD-40 AEROSOL Manufacturer: WD-40 Company	4/12/05		10/26/15	Not Determined
359	ZERO IN SOK FLYING & CRAWLING INSECT KILLER Manufacturer: State Chemical Manufacturing Company	3/1/04		N/A	Not Determined
360	ZEROL 150 ALKYLBENZENE REFRIGERATION OIL Manufacturer: Shrieve Chemical Products Company	2/1/98		N/A	Not Determined
361	ZINC METAL POWDER Powdered Zinc; Blue Powder; Ci77945; Ci Pigment Black 16 Manufacturer: Avantor Performance Materials Mallinckrodt Baker, Inc.	11/21/08	7440-66-6	N/A	Not Determined
362	Zinc Sulfate, 7-Hydra Sulfuric Acid, Zinc Salt (1:1) Heptahydrate; Zinc Vitriol, Heptahydrate; Zinc Sulfate, Heptahydrate Manufacturer: Avantor Performance Materials Mallinckrodt - J.T. Baker, Inc.	11/10/05	7733-02-0, 7446-20-0	N/A	Not Determined
363	ZOECON GENTROL IGR CONCENTRATE (S)-Hydroprene: (Ethyl(2E,4E,7S)-3,7,11-trimethyl-2,4-dodecadienoate Manufacturer:	9/7/15		5/25/16	GHS SDS, US ANSI

Appendix 3.7

Facilities Services Chemical List

Item No.	Product	Revision Date	Product CAS #	Last Verified	Regulatory Format
	Wellmark International				
364	ZOECON GENTROL IGR CONCENTRATE (S)-Hydroprene: (Ethyl(2E,4E,7S)-3,7,11-trimethyl-2,4-dodecadienoate Manufacturer: Wellmark International	6/1/10		8/4/15	US ANSI

Appendix 3.8

Coal Bin Capacity Letter

EASTERN KENTUCKY UNIVERSITY
Richmond, Kentucky 40475

OFFICE OF BUSINESS AFFAIRS
Division of Purchases and Stores

January 5, 1978

MEMORANDUM

TO: Mr. Neal Donaldson
Vice President for Business Affairs

FROM: B. A. Grubbs

SUBJECT: Coal

Because of the foresight to build a place to stockpile coal at Eastern you and others responsible are to be congratulated to the highest level.

Due to this facility, I did not have a single problem with delivery or receipt of coal this heating season, 1977-78. Advanced planning led me to recommend we fill our stockpile facility this year due to the talk of the strike which became a reality. We also found out how much coal our facility would hold at full capacity, approximately 10,000 tons, which is almost one year's supply under normal weather conditions.

Some background on coal purchased at Eastern over the past several years is as follows: We purchase a very high quality coal at Eastern because we believe beyond any doubt its performance outweighs lower specifications and prices. Also, better quality coal reduces breakdowns. In winter of 1974-75, coal prices soared to over $54.00 per delivered ton. We were desperate and were fortunate to get any quality coal at whatever price the market desired. Prior to 1974-75, the state had bid and purchased our coal requirements. Due to the many problems they were having with the purchase of coal, they agreed to delegate the authority to all the state universities to purchase their own coal requirements. Since the winter of 1974-75, we have been buying coal on a direct basis. This year we purchased about 10,000 tons of coal.

At the present time, coal is our most abundant and economical source of heating fuel. At the present price level of $39.95 per delivered ton coal is the cheapest heating fuel over electricity or fuel oil, recognizing the cost of handling coal is greater than the other two heating fuels. At the present price of $39.95 per delivered ton we will spend approximately $500,000 for coal to heat the university campus for fiscal year 1977-78. This figure will probably increase due to higher wages and more demands from miners thereby increasing the prices to the consumer.

Back to why I write this letter - Aside from the fact that the coal price peaked in the winter of 1974-75, I know we are purchasing coal somewhat cheaper at the university now because we are able to STOCKPILE our coal having the major

APPENDIX 4

EKU NATURAL RISK CHARTS:

EARTHQUAKE

FLOOD

TORNADO

Appendix 4.1

Earthquake

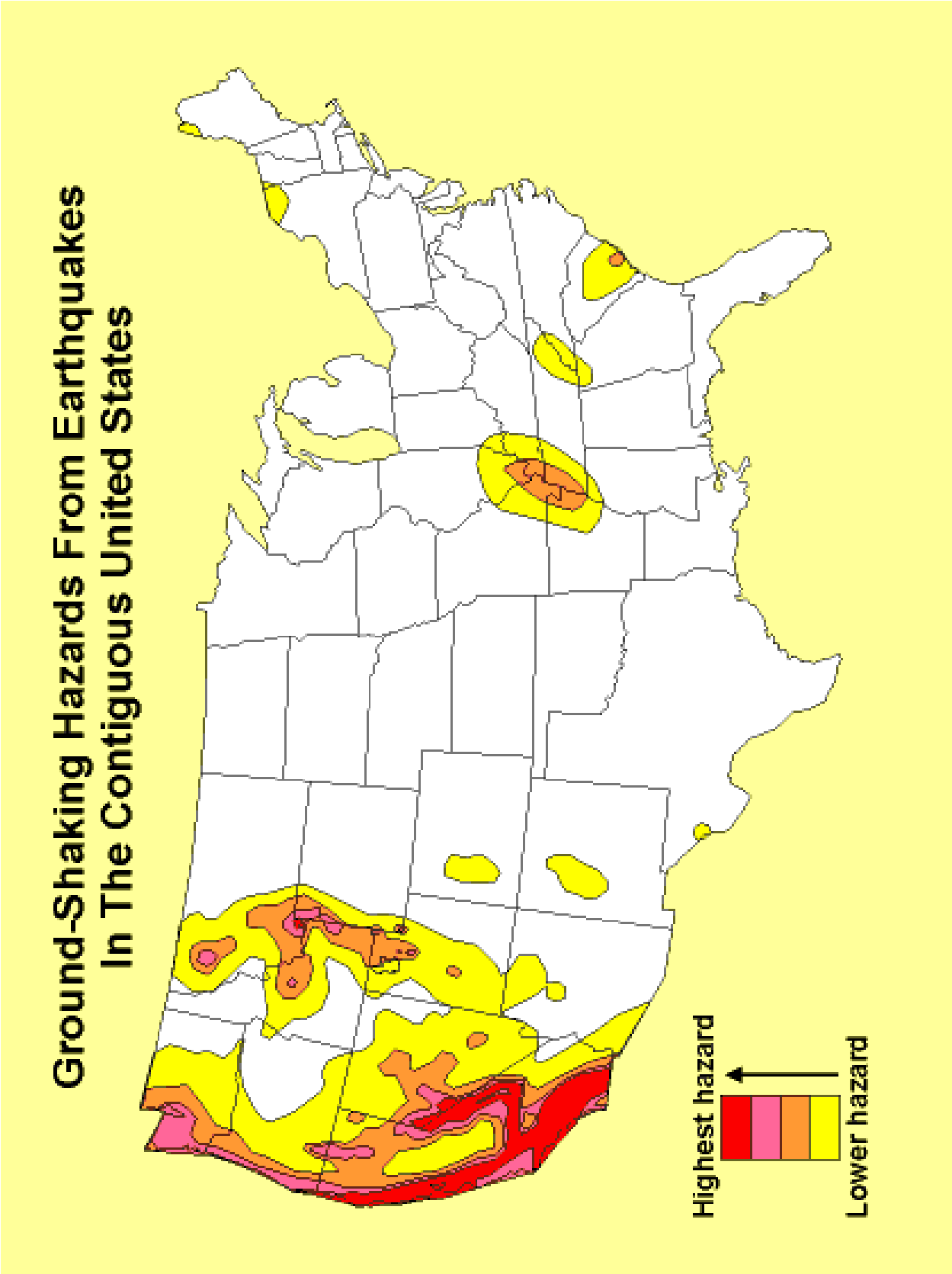

Appendix 4.1, cont.

Earthquake

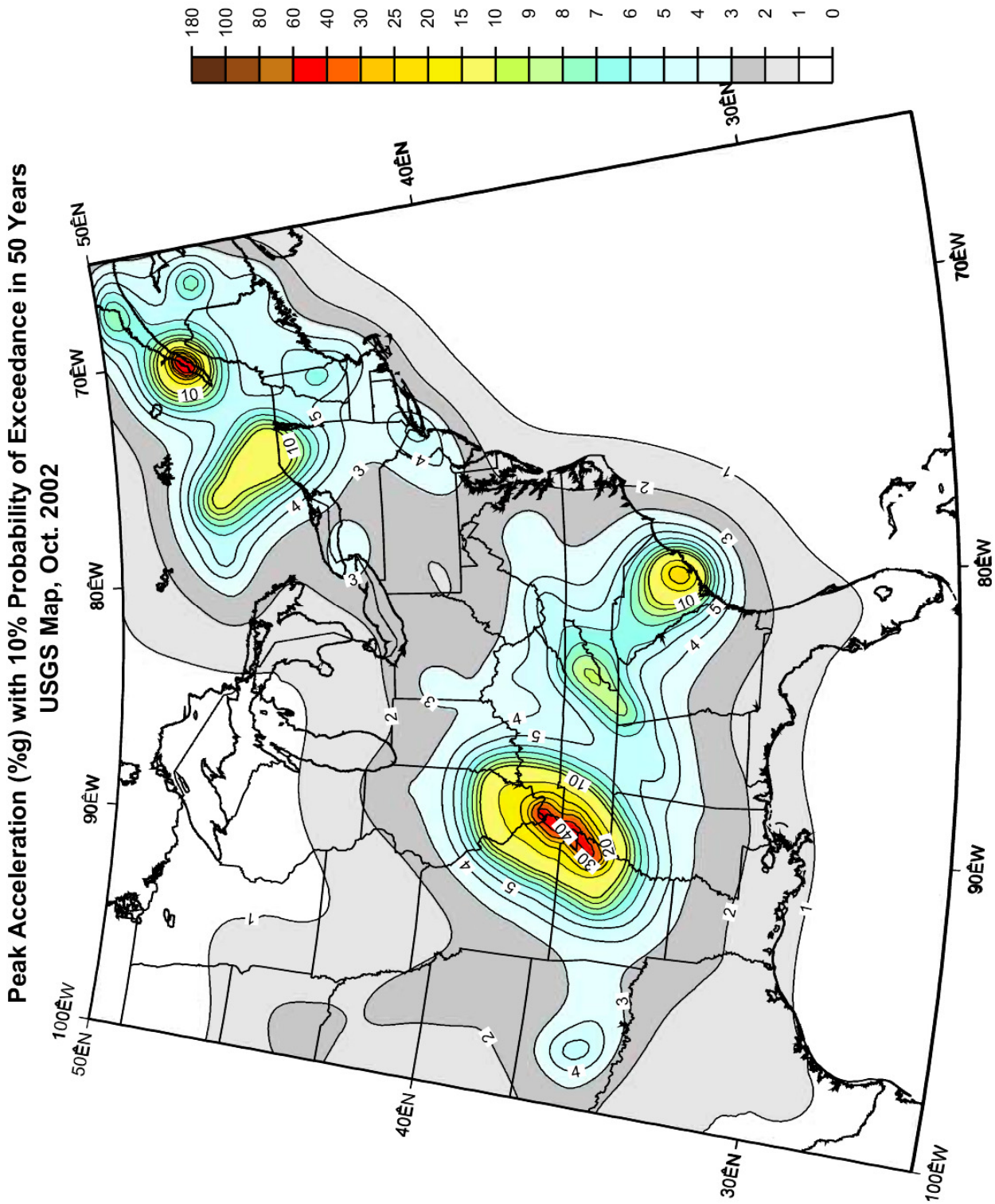

Appendix 4.2

Flood

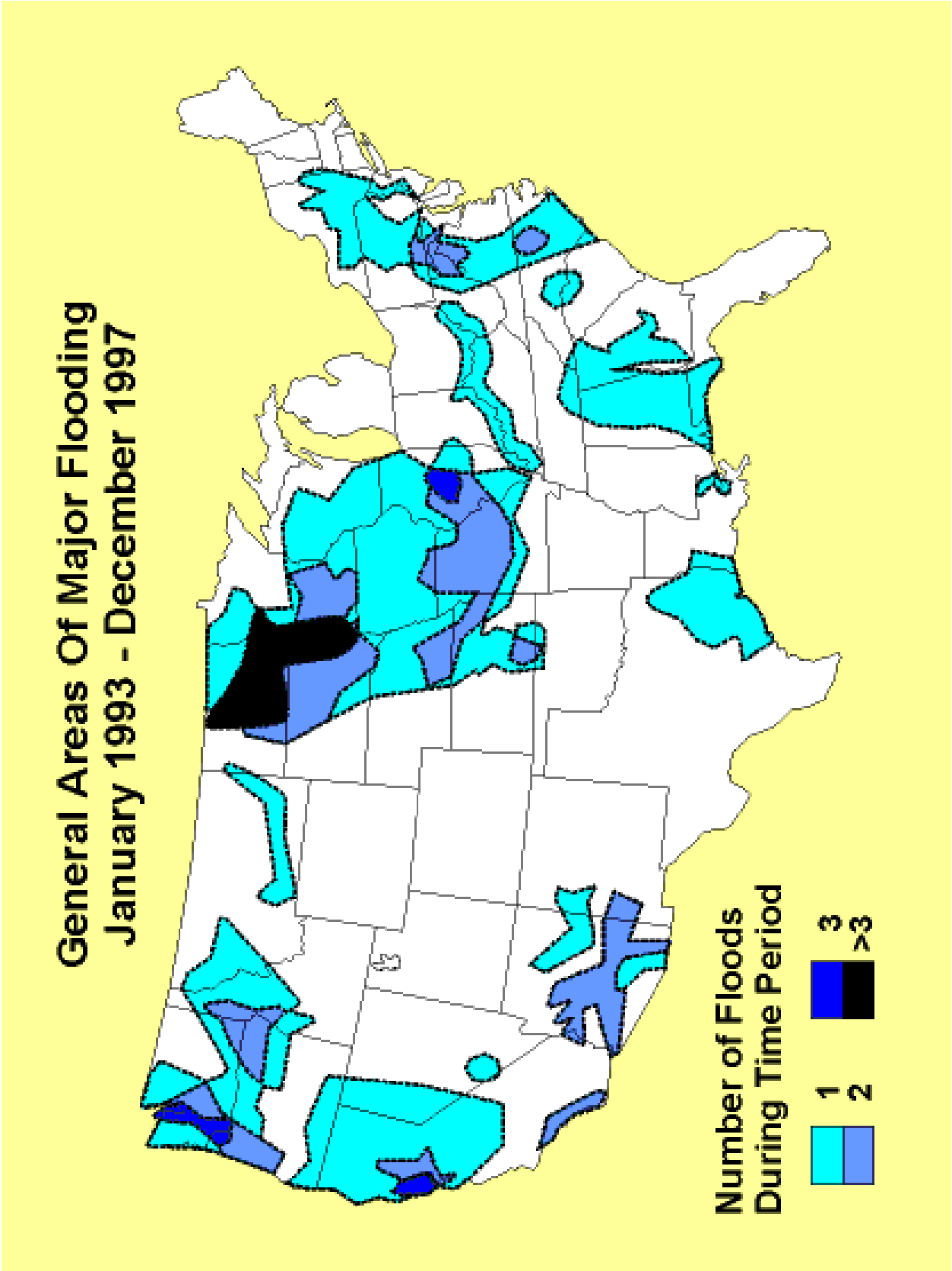

Appendix 4.3

Tornado

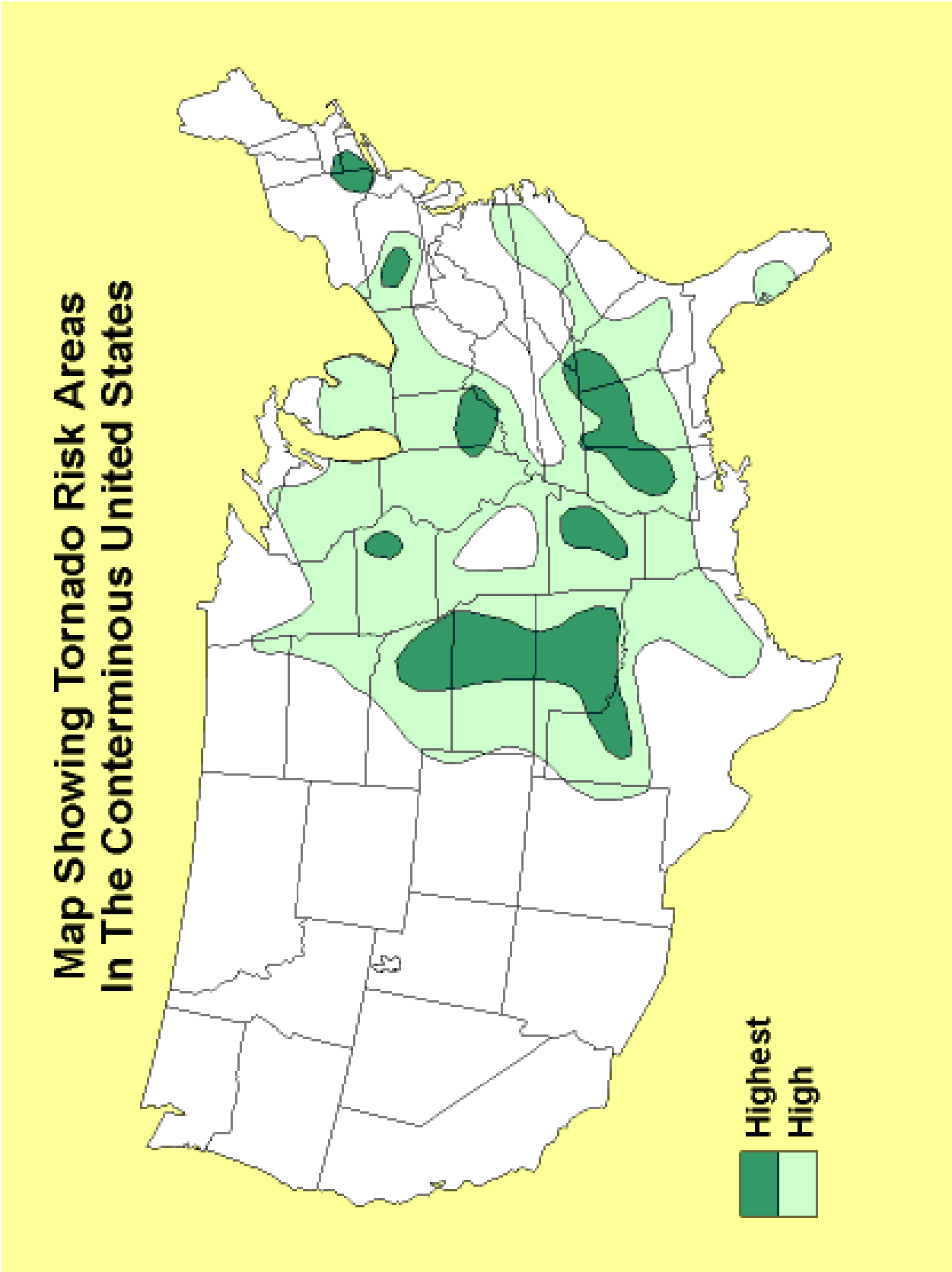

APPENDIX 5

EPA SPCC INSPECTIONS & TESTING REQUIREMENTS SUMMARY

MONTHLY INSPECTIONS CHECKLIST

INDOOR AST MONTHLY INSPECTION FORM

OUTDOOR AST MONTHLY INSPECTION FORM

MCGREGOR HALL UST MONTHLY INSPECTION FORM

CUSTODIAL PESTICIDES MONTHLY INSPECTION FORM

BULK STORAGE MONTHLY INSPECTION FORM

HAZARDOUS WASTE MONTHLY INSPECTION

CHEMISTRY DEPARTMENT CHEMICALS MONTHLY INSPECTION

OUTDOOR TRANSFORMERS MONTHLY INSPECTION FORM

INDOOR TRANSFORMERS SEMI-ANNUAL INSPECTION FORM

INSPECTION, EVALUATION, AND TESTING
(excerpted)

7.1 Introduction

Regularly scheduled inspections, evaluations, and testing by qualified personnel are critical parts of discharge prevention. Their purpose is to prevent, predict, and readily detect discharges. They are conducted not only on containers, but also on associated piping, valves, and appurtenances, and on other equipment and components that could be a source or cause of an oil release. Activities may involve one or more of the following: an external visual inspection of containers, piping, valves, appurtenances, foundations, and supports; a non-destructive shell test to evaluate integrity of certain containers; and additional evaluations, as needed, to assess the equipment's fitness for continued service. The type of activity and its scope will depend on the exercise of good engineering practice; not every action will necessarily be applicable to every facility and container, and additional inspections may be required in some cases. An inspection, evaluation, and testing program that complies with SPCC requirements should specify the procedures, schedule/frequency, types of equipment covered, person(s) conducting the activities, recordkeeping practices, and other elements as outlined in this chapter.

7.2 Inspection, Evaluation, and Testing under the SPCC Rule

Various provisions of the SPCC rule relate to the inspection, evaluation, and testing of containers, associated piping, and other oil-containing equipment. Different requirements apply to different types of equipment and to different types of facilities. The requirements are generally aimed at preventing discharges of oil caused by leaks, brittle fracture, or other forms of container failure by ensuring that containers used to store oil have the necessary physical integrity for continued oil storage. The requirements are also aimed at detecting container failures (such as small pinhole leaks) before they can become significant and result in a discharge as described in §112.1(b).

The SPCC rule is a performance-based regulation. Since each facility may present unique characteristics and since methodologies may evolve as new technologies are developed, the rule does not prescribe a specific frequency or methodology to perform the required inspections, evaluations, and tests. Instead, it relies on the use of good engineering practice, based on the professional judgement of the Professional Engineer (PE) who certifies the SPCC Plan considering industry standards. In addition, recommended practices, safety considerations, and requirements of other federal, state, or local regulations may be considered in the development and PE certification of the SPCC Plan. Section 112.3(d) specifically states that the PE certification of a Plan attests that "procedures for required inspections and testing have been established." Thus, in certifying an SPCC Plan, a PE is also certifying that the inspection program it describes is appropriate for the facility and is consistent with good engineering practice. Section 112.3(d) also states that the Plan must be prepared in accordance with good engineering practice, including consideration of applicable industry standards, and with the requirements of 40 CFR part 112.

7.2.2 Regularly Scheduled Integrity Testing and Frequent Visual Inspection of Aboveground Bulk Storage Containers

The provision sets two distinct requirements for aboveground bulk storage containers:

(1) Regularly scheduled integrity testing; and
(2) Frequent visual inspection of the outside of the container.

Regularly scheduled integrity testing. The integrity testing requirements are distinct from, and are in addition to, the requirement to frequently inspect the outside of an aboveground storage container ("visual inspection," see below). The integrity testing requirement applies to large (field-constructed or field-erected) and small (shop-built)[3] aboveground containers; aboveground containers on, partially in (partially buried, bunkered, or vaulted tanks), and off the ground wherever located; and to aboveground containers storing any type of oil.

Generally, visual inspection alone is not sufficient to test the integrity of the container as stated in §§112.8(c)(6) and 112.12(c)(6); it must be combined with another testing technique and must include the container's supports and foundations. Testing techniques include but are not limited to:

- Hydrostatic testing;[4]
- Radiographic testing;
- Ultrasonic testing;
- Acoustic emissions testing; and
- Another system of non-destructive shell testing.

The SPCC rule requires that integrity testing of aboveground bulk storage containers be performed on a regular schedule, as well as when material repairs[5] are made, because such repairs might increase the potential for oil discharges. As stated in the preamble to the final 2002 rule, "Testing on a 'regular schedule' means testing per industry standards or at a frequency sufficient to prevent discharges. Whatever schedule the PE selects must be documented in the Plan" (67 FR 47119). The frequency of integrity tests should reflect the particular conditions of the container, such as the age, service history, original construction specifications, prior inspection results, and the existing condition of the container.

Frequent visual inspection. There must be a frequent inspection of the outside of the container for signs of deterioration, discharges, or accumulations of oil inside diked areas (§112.8(c)(6)). This visual inspection is intended to be a routine walk-around. EPA expects that the walk-around, which will occur on an ongoing routine basis, can generally be conducted by properly trained facility personnel, as opposed to the more intensive but less frequent visual inspection component of the non-destructive examination conducted by qualified testing/inspection personnel. Qualifications of these personnel are outlined in tank inspection standards, such as API 653 and STI SP-001. A facility owner or operator can, for example, visually inspect the outside of bulk storage containers on a daily, weekly, and/or monthly basis, and supplement this inspection with integrity testing (see above) performed by a certified inspector, with the scope and frequency

determined by industry standards or according to a site-specific inspection program developed by the PE.

Oil-filled electrical, operating, and manufacturing devices or equipment are not considered bulk storage containers; therefore, the integrity testing requirements in §§112.8(c)(6) and 112.12(c)(6) do not apply to those devices or equipment. However, EPA recommends that even where not specifically required by the rule, it is good engineering practice to frequently inspect the outside of oil-filled operational, electrical, and manufacturing equipment to determine whether it could cause a discharge.

Table 7-5 summarizes the facility components covered by select industry standards and recommended practices for tanks, valves, pipes, and appurtenances. Additional standards and/or manufacturers' standards may also apply. The recommended standards for facility personnel to use for inspecting and testing at a particular facility would be specified in the SPCC Plan by the PE preparing the Plan. All actions (e.g., visual inspection or testing) performed by facility personnel must be appropriately documented and maintained in permanent facility records as per §112.7(e).

Table 7-5. Checklist summary of industry standards for inspection, evaluation, and testing.

Facility Component(s) Covered in Standard or Recommended Practice	Potentially Relevant Standards and Recommended Practices								
	API 653	STI SP001	API 570	API RP* 575	API RP* 574	API 12R1	API 1110	ASME B31.3	ASME B31.4
New equipment						✔	✔	✔	✔
Equipment that has been in service	✔	✔	✔	✔	✔	✔	✔		✔
Shop-built AST	✔	✔		✔		✔			
Field-erected AST	✔			✔		✔			
Plastic tanks		✔							
Container supports or foundation	✔	✔		✔		✔			
Buried metallic storage tank									
Tank car or tank truck									
Diked area		✔							
Aboveground valves, piping, and appurtenances		✔	✔	✔	✔		✔	✔	✔
Underground piping			✔		✔				
Offshore valves, piping, and appurtenances									✔
Steam return and exhaust lines									
Field drainage systems, oil traps, sumps, and/or skimmers									

* Recommended practice.

MONTHLY INSPECTIONS CHECKLIST

YEAR: _____

	JAN	FEB	MAR	APR	MAY	JUN	JUL	AUG	SEP	OCT	NOV	DEC
Indoor AST's (Emergency Generators, Fire Protection)	Y N	Y N	Y N	Y N	Y N	Y N	Y N	Y N	Y N	Y N	Y N	Y N
Outdoor AST's (Emergency Generators, Fire Protection, Vehicle Fuel)	Y N	Y N	Y N	Y N	Y N	Y N	Y N	Y N	Y N	Y N	Y N	Y N
Steel UST's	Y N	Y N	Y N	Y N	Y N	Y N	Y N	Y N	Y N	Y N	Y N	Y N
Fiberglass UST's	Y N	Y N	Y N	Y N	Y N	Y N	Y N	Y N	Y N	Y N	Y N	Y N
Drums, Tanks and Containers	Y N	Y N	Y N	Y N	Y N	Y N	Y N	Y N	Y N	Y N	Y N	Y N
Custodial Pesticides	Y N	Y N	Y N	Y N	Y N	Y N	Y N	Y N	Y N	Y N	Y N	Y N
Bulk Storage (Coal Bin, Ash Silo, Bottom Ash)	Y N	Y N	Y N	Y N	Y N	Y N	Y N	Y N	Y N	Y N	Y N	Y N
Hazardous Waste Storage & PPE (including satellite locatons)	Y N	Y N	Y N	Y N	Y N	Y N	Y N	Y N	Y N	Y N	Y N	Y N
Outdoor Transformers	Y N	Y N	Y N	Y N	Y N	Y N	Y N	Y N	Y N	Y N	Y N	Y N
Indoor Transformers (semi-annual only; indicate months)												

Indoor Above Ground Storage Tanks

Monthly Inspection

Date _____

Initials _____

	Run hours meter reading	Tank is easily accessible for inspection	Tank is properly labeled with capacity and contents	All tank openings are properly sealed, all vents are unobstructed	Level gauges or alarms/indicators readable, calibrated and operational	Pumps, hoses, valves, vents, O-rings, gaskets, filler caps and drains undamaged and operational	Absence of excessive rust, corrosion or pitting on container surfaces, bolts & rivets intact, seams undamaged	Tank foundations level and intact	Tank supports and pipelines sturdy and stable and free of damage, deterioration or excessive corrosion or pitting	Tank, containment area, pad and ground free from any new signs of leakage	Tank has no water content. If water is present, remove and dispose properly and attach documentation of amount	Secondary containment, interstitial space or overspill container free of water or product. Remove water or spillage and properly dispose and attach documentation	Secondary containment free of debris, no other fire hazards	Secondary containment drainplugs or valves are operable, closed and cannot be accidentally opened	Absence of valve, joint or gasket leaks	Absence of any other conditions that need addressing for safe operation or SPCC compliance
Dizney Generator		Y N	Y N	Y N	Y N	Y N	Y N	Y N	Y N	Y N	Y N	Y N	Y N	Y N	Y N	Y N
Funderburk Generator		Y N	Y N	Y N	Y N	Y N	Y N	Y N	Y N	Y N	Y N	Y N	Y N	Y N	Y N	Y N
Keene Fire Protection		Y N	Y N	Y N	Y N	Y N	Y N	Y N	Y N	Y N	Y N	Y N	Y N	Y N	Y N	Y N
Telford Fire Protection		Y N	Y N	Y N	Y N	Y N	Y N	Y N	Y N	Y N	Y N	Y N	Y N	Y N	Y N	Y N
Sullivan Generator		Y N	Y N	Y N	Y N	Y N	Y N	Y N	Y N	Y N	Y N	Y N	Y N	Y N	Y N	Y N
Burnam Generator		Y N	Y N	Y N	Y N	Y N	Y N	Y N	Y N	Y N	Y N	Y N	Y N	Y N	Y N	Y N
Case Fire Protection		Y N	Y N	Y N	Y N	Y N	Y N	Y N	Y N	Y N	Y N	Y N	Y N	Y N	Y N	Y N
Commonwealth Fire Protection		Y N	Y N	Y N	Y N	Y N	Y N	Y N	Y N	Y N	Y N	Y N	Y N	Y N	Y N	Y N
Dupree Fire Protection		Y N	Y N	Y N	Y N	Y N	Y N	Y N	Y N	Y N	Y N	Y N	Y N	Y N	Y N	Y N
SSB Generator		Y N	Y N	Y N	Y N	Y N	Y N	Y N	Y N	Y N	Y N	Y N	Y N	Y N	Y N	Y N
McGregor Fire Protection		Y N	Y N	Y N	Y N	Y N	Y N	Y N	Y N	Y N	Y N	Y N	Y N	Y N	Y N	Y N
Mattox Generator		Y N	Y N	Y N	Y N	Y N	Y N	Y N	Y N	Y N	Y N	Y N	Y N	Y N	Y N	Y N
Martin Hall Generator		Y N	Y N	Y N	Y N	Y N	Y N	Y N	Y N	Y N	Y N	Y N	Y N	Y N	Y N	Y N
Martin Hall Fire Protection		Y N	Y N	Y N	Y N	Y N	Y N	Y N	Y N	Y N	Y N	Y N	Y N	Y N	Y N	Y N
Combs Hall Fire Protection		Y N	Y N	Y N	Y N	Y N	Y N	Y N	Y N	Y N	Y N	Y N	Y N	Y N	Y N	Y N
Roark Generator		Y N	Y N	Y N	Y N	Y N	Y N	Y N	Y N	Y N	Y N	Y N	Y N	Y N	Y N	Y N

Outdoor Above Ground Storage Tanks

Monthly Inspection

Date _____

Initials _____

	Run hours meter reading	Tank is easily accessible for inspection	Tank is properly labeled with capacity and contents	Fill cap locked and fill pump locked	Interstitial space free of water or fuel. If not, contact Riley Oil 253-3340 to remove; attach documentation of who and when	All tank openings are properly sealed, all vents are unobstructed	Level gauges or alarms/indicators readable, calibrated and operational	Pumps, hoses, valves, vents, O-rings, gaskets, filler caps and drains undamaged and operational	Absence of excessive rust, corrosion or pitting on container surfaces, bolts & rivets intact, seams undamaged	Tank foundations level and intact	Tank supports and pipelines sturdy and stable and free of damage, deterioration or excessive corrosion or pitting	Tank, containment area, pad and ground free from any new signs of leakage	Tank has no water content. If water is present, remove and dispose properly and attach documentation of amount	Absence of valve, joint or gasket leaks	Absence of any other conditions that need addressing for safe operation or SPCC compliance	Spill Kits in place and complete (closure tie not broken)	If not, EH&S notified (Bryan Makinen x22421)
Black Building Gasoline #1		Y N	Y N	Y N	Y N	Y N	Y N	Y N	Y N	Y N	Y N	Y N		Y N	Y N	Y N	Y N
Black Building Gasoline #2		Y N	Y N	Y N	Y N	Y N	Y N	Y N	Y N	Y N	Y N	Y N		Y N	Y N	Y N	Y N
Black Building Diesel		Y N	Y N	Y N	Y N	Y N	Y N	Y N	Y N	Y N	Y N	Y N		Y N	Y N	Y N	Y N
Moberly Generator		Y N	Y N			Y N	Y N	Y N	Y N	Y N	Y N	Y N	Y N	Y N	Y N		
Bizzack Generator		Y N	Y N			Y N	Y N	Y N	Y N	Y N	Y N	Y N	Y N	Y N	Y N		
McKinney Skills Generator		Y N	Y N			Y N	Y N	Y N	Y N	Y N	Y N	Y N	Y N	Y N	Y N		
Sayre Generator		Y N	Y N			Y N	Y N	Y N	Y N	Y N	Y N	Y N	Y N	Y N	Y N		
Bus & Tech Generator		Y N	Y N			Y N	Y N	Y N	Y N	Y N	Y N	Y N	Y N	Y N	Y N		
Ramsey Generator		Y N	Y N			Y N	Y N	Y N	Y N	Y N	Y N	Y N	Y N	Y N	Y N		
Powell Generator		Y N	Y N			Y N	Y N	Y N	Y N	Y N	Y N	Y N	Y N	Y N	Y N		
Coates Generator		Y N	Y N			Y N	Y N	Y N	Y N	Y N	Y N	Y N	Y N	Y N	Y N		

DEP8054/01/06 401 KAR 42:030 (WITH LEVEL CHECKING) EKU

KENTUCKY DEPARTMENT FOR ENVIRONMENTAL PROTECTION

Mail completed form to:
DIVISION OF WASTE MANAGEMENT
UST BRANCH
81 C. MICHAEL DAVENPORT BLVD.
FRANKFORT, KENTUCKY 40601
(502) 564-5981 / (800) 928-7782
http://www.waste.ky.gov

FOR OFFICE USE ONLY

60-DAY RECORD OF RECTIFIER OPERATION FOR IMPRESSED CURRENT CATHODIC PROTECTION SYSTEM

- This form should be utilized to document that the cathodic protection system rectifier is checked for operation at least once every 60 days.
- Checked for operation is taken to mean that it was confirmed the rectifier was receiving power and is "turned on".
- If your rectifier is so equipped, you should also record the output voltage, amperage and the number of hours indicated on the meter.
- Any significant variance should be reported to your corrosion professional so that any repairs and/or adjustments necessary can be made.

I. UST OWNER		II. SITE INFORMATION	
NAME: Eastern Kentucky University		NAME: McGregor Hall	AI NUMBER: 1026076
ADDRESS: 521 Lancaster Avenue		ADDRESS: Alley between University and Park Drives	
CITY: Richmond	STATE: KY	CITY: Richmond	COUNTY: Madison

XI. IMPRESSED CURRENT RECTIFIER DATA

In order to conduct an effective evaluation of the cathodic protection system, a complete evaluation of rectifier operation is necessary

RECTIFIER MANUFACTURER: Universal Rectifier, Inc.	RATED DC OUTPUT: 40 VOLTS 5 AMPS
RECTIFIER MODEL: Universal ES-2	RECTIFIER SERIAL NUMBER:

What is the "as designed" or "lastly recommended" rectifier output: _____ VOLTS _____ AMPS

DATE INSPECTED, RUN OR FILLED	UNIT ON?	TAP SETTINGS		DC OUTPUT		TANK LEVEL		WELL	LEVEL CHANGE*		GALLONS ADDED / RUN TIME HOURS / OTHER COMMENTS	INSPECTOR INITIALS
		FINE	COARSE	VOLTS	AMPS	DIESEL	WATER	DRY/WET	1 MNTH	3 MOS		
/ /												
/ /												
/ /												
/ /												
/ /												
/ /												
/ /												
/ /												
/ /												
/ /												
/ /												
/ /												
/ /												
/ /												
/ /												
/ /												
/ /												
/ /												

I Certify under penalty of law that the submitted information is true, accurate, and complete. KRS 224.99-010(4) provides for penalties for submitting false information, including the possibility of fine and imprisonment.

_____ Owner Signature

_____ / _____ / _____ Date Signed

* If level changes by more than 1" in one month or by more than 1 1/2" in 3 months without explanation, contact Jamie Abell at Jet Testing (270) 402 3495.

If you have questions on how to fill out this form or to request a review of your site records, please contact the UST Branch at (502) 564-5981 / (800) 928-7782 or visit our website at http://www.waste.ky.gov.

**** RETAIN FOR REVIEW BY EPA ON REQUEST ****

Custodial Pesticides - L.O. Martin Building

Monthly Inspection

Date _____ **Initials** _____

		Comments / Actions	Date Completed
Tanks & containers stored in designated areas and easily accessible for inspection	Y N		
Tanks or containers sealed and properly labeled	Y N		
Absence of excessive rust, corrosion or pitting on tanks or container surfaces	Y N		
Absence of noticeable distortions, buckling, denting, bulging or other damage	Y N		
Absence of evidence of leaks from tank or container or in or around storage area	Y N		
Absence of evidence of leaks around bulk material, solvents or chemical storage	Y N		
No 55 gallon drums	Y N		
Emergency PPE in place	Y N		
Spill kits in place and complete	Y N		
If not, date PPE and/or spill kit restocked			

Bulk Storage

Monthly Inspection

Date _____ **Initials** _____

	Middleton Coal Bin	Middleton Ash Pile	Ramsey Ash Silo	Ramsey Ash Pile	Ramsey Deicer	Comments / Actions	Date Completed
Evidence of recent release to non-storage area (discoloration)	Y N	Y N	Y N	Y N	Y N		
Evidence of oil or fuel spill within storage area	Y N	Y N					
Evidence of runoff (other than to intended Middleton Coal Bin drains)	Y N	Y N	Y N	Y N	Y N		
Ash removed		Y N		Y N			

Hazardous Waste Storage

Monthly Inspection

Monthly inspections of satellite storage locations and associated PPE are conducted by EKU Environmental Health & Safety and stored in their office.

Environmental Health & Safety
Dekia Gaither, EH&S Specialist
Environmental Compliance
Adams House

Public Safety & Risk Management
Bryan Makinen, Executive Director
Adams House
859 622-2421

Weekly inspections of Hazardous Waste storage areas (ready to ship) and associated PPE are kept in the Chemistry Department.

Larry Miller, Chemical Storage Manager
Moore 418
859 622-6355

Chemistry Department Chemicals

Monthly Inspection

Monthly inspections of Chemistry Department chemicals and associated PPE are conducted by the EKU Chemistry Department.

Larry Miller, Chemical Storage Manager
Moore 418
859 622-6355

Copies are kept on a shared drive and in the EKU Environmental Health & Safety office.

Environmental Health & Safety
Dekia Gaither, EH&S Specialist
Environmental Compliance
Adams House

Public Safety & Risk Management
Bryan Makinen, Executive Director
Adams House
859 622-2421

Outdoor Transformers

Monthly Inspection

Date _____ **Initials** _____	Lack of excessive corrosion, bolts & rivets intact, seams undamaged	Any evidence of transformer leak or stressed vegetation	Foundation level & intact; no evidence of shifting or erosion	Bolt and padlock in place and operable	Area free of debris and easily accessible for inspection	Comments Any other condition that needs addressing for safe operation or spill prevention
Gentry	Y N	Y N	Y N	Y N	Y N	
Gabbard	Y N	Y N	Y N	Y N	Y N	
Black	Y N	Y N	Y N	Y N	Y N	
Presnell	Y N	Y N	Y N	Y N	Y N	
Softball North	Y N	Y N	Y N	Y N	Y N	
Intramural Fields	Y N	Y N	Y N	Y N	Y N	
Softball South	Y N	Y N	Y N	Y N	Y N	
Van Hoose 01 02	Y N	Y N	Y N	Y N	Y N	
Van Hoose 03 04	Y N	Y N	Y N	Y N	Y N	
Dizney	Y N	Y N	Y N	Y N	Y N	
Begley Field Lights	Y N	Y N	Y N	Y N	Y N	
Moberly	Y N	Y N	Y N	Y N	Y N	
Hummel Planetarium	Y N	Y N	Y N	Y N	Y N	
Leach Driving Range	Y N	Y N	Y N	Y N	Y N	
Schoolhouse	Y N	Y N	Y N	Y N	Y N	
DOCJT Firing Range	Y N	Y N	Y N	Y N	Y N	
DOCJT Simulator	Y N	Y N	Y N	Y N	Y N	
Ashland	Y N	Y N	Y N	Y N	Y N	
Ashland Lot	Y N	Y N	Y N	Y N	Y N	
Bypass Lights 1 phase	Y N	Y N	Y N	Y N	Y N	
Hall Drive Lights	Y N	Y N	Y N	Y N	Y N	
Adams	Y N	Y N	Y N	Y N	Y N	
CRAFT	Y N	Y N	Y N	Y N	Y N	
Carter	Y N	Y N	Y N	Y N	Y N	
Carter Greenhouse 1 phase	Y N	Y N	Y N	Y N	Y N	
Smith Observatory	Y N	Y N	Y N	Y N	Y N	
South Hall Lot	Y N	Y N	Y N	Y N	Y N	
Ramsey Courtyard	Y N	Y N	Y N	Y N	Y N	

Outdoor Transformers

Monthly Inspection

Date _____ **Initials** _____	Lack of excessive corrosion, bolts & rivets intact, seams undamaged	Any evidence of transformer leak or stressed vegetation	Foundation level & intact; no evidence of shifting or erosion	Bolt and padlock in place and operable	Area free of debris and easily accessible for inspection	Comments Any other condition that needs addressing for safe operation or spill prevention
Ramsey Front	Y N	Y N	Y N	Y N	Y N	
Turley House	Y N	Y N	Y N	Y N	Y N	
Sullivan	Y N	Y N	Y N	Y N	Y N	
Ault Lot	Y N	Y N	Y N	Y N	Y N	
Burnam	Y N	Y N	Y N	Y N	Y N	
Track West 3 phase	Y N	Y N	Y N	Y N	Y N	
Track East 3 phase	Y N	Y N	Y N	Y N	Y N	
Alumni Lot Basketball	Y N	Y N	Y N	Y N	Y N	
Alumni Lighting 1 phase	Y N	Y N	Y N	Y N	Y N	
Weaver	Y N	Y N	Y N	Y N	Y N	
Mattox Lot	Y N	Y N	Y N	Y N	Y N	
Miller/Beckham/McCreary	Y N	Y N	Y N	Y N	Y N	
Foster	Y N	Y N	Y N	Y N	Y N	
Van Peursem Pavilion	Y N	Y N	Y N	Y N	Y N	

Indoor Transformers

Semi-Annual Inspection

Date _____ **Initials** _____	Lack of excessive corrosion, bolts & rivets intact, seams undamaged	Spill containment area dry and free of any debris or material of any kind	Any evidence of transformer leak	Transformer easily accessible for inspection and service	Comments Any other condition that needs addressing for safe operation or spill prevention
Keene	Y N	Y N	Y N	Y N	
Telford 750 KVA	Y N	Y N	Y N	Y N	
Telford 1500 KVA	Y N	Y N	Y N	Y N	
Clay	Y N	Y N	Y N	Y N	
Wallace	Y N	Y N	Y N	Y N	
Commonwealth	Y N	Y N	Y N	Y N	
Palmer	Y N	Y N	Y N	Y N	
Dupree	Y N	Y N	Y N	Y N	
Todd	Y N	Y N	Y N	Y N	
Powell 750 KVA 1	Y N	Y N	Y N	Y N	
Powell 750 KVA 2	Y N	Y N	Y N	Y N	
McGregor	Y N	Y N	Y N	Y N	
Combs Classroom	Y N	Y N	Y N	Y N	
Donovan	Y N	Y N	Y N	Y N	
Combs Hall	Y N	Y N	Y N	Y N	
Moore	Y N	Y N	Y N	Y N	
Keen Johnson	Y N	Y N	Y N	Y N	
Burrier	Y N	Y N	Y N	Y N	
Campbell 1000 KVA 1	Y N	Y N	Y N	Y N	
Campbell 1000 KVA 2	Y N	Y N	Y N	Y N	
Jones	Y N	Y N	Y N	Y N	
Coates	Y N	Y N	Y N	Y N	
Roark	Y N	Y N	Y N	Y N	

APPENDIX 6

ANNUAL SITE COMPLIANCE EVALUATION
STORMWATER OUTFALL INSPECTION FORM

Annual Site Compliance Evaluation

Parking Lot/Access Roads /Grounds		
Is there any evidence of spilled materials in or on the following:	Yes	No
• Paved parking areas, truck parking areas, car parking areas, roadways, or paved access roads		
• Grounds, grassy areas, outside material storage areas, or gravel areas		
• Loading docks (inside and outside), shipping docks, warehouse areas, inside plant aisles, or entrance/exit ramps into buildings		
Are catch basins free of debris?		
Is there any sign of erosion?		
Is there any evidence of contaminants entering property from roadway or facilities located upslope of this facility?		
Is there any evidence of contaminants on the ground around any outside stored new or scrap materials?		

Observations:

Date: _____

Inspector: _____

Recommendations:

Date: _____

Inspector: _____

Actions Taken:

Date: _____

Inspector: _____

Annual Site Compliance Evaluation

Vehicle Maintenance	Yes	No
Is there evidence of leaks or spills of fluids around inside equipment, maintenance areas, machining areas, coolant recycle areas, truck maintenance areas, paint booth or process areas, or assembly areas? Fluids can include – oil, antifreeze, hydraulic fluids, paint, solvents, etc.		
Are parts, drums, equipment, maintenance materials, or oily materials stored outside that should be stored inside?		
Are there any drums of oil, solvent, mineral spirits, waste oil, antifreeze, paint, chemicals, coolants, floor cleaners, gasoline, or other materials stored outside?		
Is there any evidence that any vehicles have been washed in an outside area?		
Is there any evidence that vehicles (trucks, fork trucks, cars, trailers, etc.) have been serviced in an outside area either on a concrete pad or in a gravel area?		

Observations:

Date: _____

Inspector: _____

Recommendations:

Date: _____

Inspector: _____

Actions Taken:

Date: _____

Inspector: _____

STORMWATER OUTFALL INSPECTION CHECKLIST

Date of Inspection: _____

Inspector: _____

Signature of Inspector: _____

Weather:	Outfall 1		Outfall 2		Outfall 3		Outfall _		Outfall _		Outfall _		Outfall _	
	Yes	No	Yes	No	Yes	No	Yes	No	Yes	No	Yes	No	Yes	No
1. Is there any visible discharge?	☐	☐	☐	☐	☐	☐	☐	☐	☐	☐	☐	☐	☐	☐
2. Is there any visible oil sheen?	☐	☐	☐	☐	☐	☐	☐	☐	☐	☐	☐	☐	☐	☐
3. Is there any visible foam?	☐	☐	☐	☐	☐	☐	☐	☐	☐	☐	☐	☐	☐	☐
4. Is there any visible floating solids?	☐	☐	☐	☐	☐	☐	☐	☐	☐	☐	☐	☐	☐	☐
5. Is there any visible trash?	☐	☐	☐	☐	☐	☐	☐	☐	☐	☐	☐	☐	☐	☐
6. Is there any visible discoloration?	☐	☐	☐	☐	☐	☐	☐	☐	☐	☐	☐	☐	☐	☐
7. Is there any dead vegetation around outfall?	☐	☐	☐	☐	☐	☐	☐	☐	☐	☐	☐	☐	☐	☐

Comments

APPENDIX 7

SPCC BULK CONTAINER INVENTORY WORKSHEET

AST RECORD FORM

TANK INTEGRITY TESTING PROCEDURE

Container Inventory

Spill Prevention Control and Countermeasures Plan (SPCC)

- Please fill out the below survey for every new tank, container, or drum, 55 gallons or greater, that contain oil, fuel or chemicals for your facility.

- Make copies and fill out a separate form for each type of container.

Person Completing Form _____ **Phone Number** _____

Owner of Tank or Container/s _____ **Volume (gal)** _____ **No. of Containers** _____

Container Use _____ **Contents** _____

Location Description (Building, Floor, Room) _____

Please circle the following items applicable to the specific container:

Storage Container Type:

1. Site:	Above Ground	Underground	
2. Mobility:	Fixed	Tanker or Portable Container	
3. Locale:	Indoor	Outdoor	
4. Fill:	Top	Tube	Bottom
5. Discharge:	Pump	Gravity	Pressurized Tank
6. Level:	Sight Gage	Manual Dip Stick	
7. Heating Coil:	Yes	No	
8. Cathodic Protection:	Yes	No	
9. Leaks:	Leak Detection	Interstital Space Detector	Dike
10. Material:	Steel	Plastic	Fiberglass
11. Label:	Yes	No	
12. Overfill Alarm:	Automatic	Audible	Visual
13. Valve Lock:	On Fill	On Drain	Valves w/ no locks
14. Construction:	Single Wall	Double Wall	
15. Tank Type:	Horizontal	Vertical	

Secondary containment, if present; circle applicable items:

1. Material:	Concrete	Steel	Concrete Block	Earth	Plastic
2. Oil Water Separator:	Yes		No		

Secondary containment drain details; circle applicable items:

gate valve ball valve globe valve

lock

sump

pipe plug or cap

STI SP001 AST Record

Facility Name: EKU Richmond, Kentucky

Tank ID and Name: 55 Gallon Drum

Specification:

Design: ☐ UL _____ ☐ SWRI _____ ☐ Horizontal ☒ Vertical ☐ Rectangular

☐ API _____ ☐ Other _____

☐ Unknown

Manufacturer: _____ Contents: Lubricating, Gear Oil, Other Installation Date: _____ Last Repair/Reconstruction Date: _____

Dimensions: _____ Capacity: 55 gallons Last Change of Service Date: _____

Construction: ☐ Bare Steel ☐ Cathodically Protected (Check one: ☐ Galvanic or ☐ Impressed (Current) Date Installed: _____

☐ Coated Steel ☐ Concrete ☐ Plastic / Fiberglass

☐ Unknown ☐ Double Wall ☐ Lined (Date Installed): _____

Containment: ☐ Earthen Dike ☐ Steel Dike ☒ Concrete ☐ Synthetic Liner ☐ Other: _____

Continuous Release Detection Method (CDRM): ☐ Date Installed: _____ Type: _____

Release Prevention Barrier: ☐ Date Installed: _____ Type: _____

Appendix 7.3

Integrity Testing Procedure

Integrity Testing Procedure [40 CFR 112.8(c)]

The facility has prepared a Tank Integrity Testing and Inspection Procedure in conformance with the SPCC requirement which states that a tank testing program must be prepared and implemented by March 30, 2007. For reference, the inspection forms, Monthly SPCC AST Inspection Form and Annual SPCC AST Inspection Form, are included in Appendix C of this Plan. The procedure for this facility (to comply with 40 CFR 112.8[c]) follows:

PROCEDURE: Container Inspection and Integrity Testing Procedure

REQUIREMENT: 40 CFR 112.8(c)(6)

RESPONSIBILITY: Manager Environmental Compliance (EC) will administer procedure and maintain records

Note – Manager EC may delegate this responsibility to staff in facilities operations, facilities maintenance, or external contractor.

PROCEDURE 1 - **PERIODIC VISUAL TANK INSPECTION (all tanks)**

ACTIONS:

1. Manager EC obtains Monthly SPCC AST Inspection Form for monthly inspection. A blank form is located in Appendix 5.
2. Manager EC obtains Annual SPCC AST Inspection Form for annual tank inspection. A blank form is located in Appendix 5.
3. Manager EC gives FORM(s) to employee who will conduct the tank inspection
4. Employee conducts tank inspections using Monthly SPCC AST Inspection Form and Annual SPCC AST Inspection Form, as appropriate, identifies any deficiencies on the Form(s), takes corrective action if possible, and returns the completed Form(s) to the Manager EC for filing
5. If the employee determines that there is a condition observed during the inspection that requires the AST to be taken out of service, the employee will immediately notify the Manager EC of that condition and the Manager EC will implement actions needed to remove product stored in that container in a safe manner and implement corrective actions needed to correct the condition observed.
6. Manager EC reviews completed visual inspection, initiates corrective actions for noted deficiencies (as required), and files the form in the EC filing System Folder for SPCC - PERIODIC TANK INSPECTIONS

FORMS: Monthly SPCC AST Inspection Form
Annual SPCC AST Inspection Form

PROCEDURE 2 - **20 YEAR INTERVAL EXTERNAL INSPECTION**

NOTE – Only required for tanks exceeding 5,001 gallons

ACTIONS:

1. Manager EC creates a 20 Year External Inspection Form for 20 Year Certified External Inspections of Category 1 tanks in excess of 5,001 gallons of storage capacity (Note Specific inspection criteria for Certified External Inspection of Category 1 tanks are found in the STI SP001 guidance document).
2. Manager contacts external contractor who is certified to conduct this external inspection and provides 20 Year External Inspection Form or equivalent Contractor-supplied FORM as long as the contractor's External Inspection Procedure and checklist conforms to the STI SP001 standard 7.0.
3. Contractor conducts tank inspections using 20 Year External Inspection Form, identifies any deficiencies on the FORM, takes corrective action if possible, and returns the completed FORM to the Manager EC for filing
4. If contractor determines that there is a condition observed during the inspection that requires the AST to be taken out of service, the contractor will immediately notify the Manager EC of that condition and the Manager EC will implement actions needed to remove product stored in that container in a safe manner and implement corrective actions needed to correct the condition observed.
5. Manager EC reviews completed visual inspection, initiates corrective actions for noted deficiencies (as required), and files the form in the EHS filing System Folder for SPCC- PERIODIC TANK INSPECTIONS

FORMS: 20-Year Interval SPCC AST External Inspection Form

THE FOLLOWING SECTION IS A SUMMARY OF THE US EPA's REVIEW OF THE STI SP001 as found in the following:

U.S. Environmental Protection Agency 7-27 Version 1.1, 2/3/06 *SPCC Guidance for Regional Inspectors*

7.5.2 STI Standard SP-001 – Standard for the Inspection of Aboveground Storage Tanks

STI Standard SP-001 – Standard for the Inspection of Aboveground Storage Tanks (SP-001)[11] provides the minimum inspection requirements and evaluation criteria required to determine the suitability for continued service of aboveground storage tanks until the next scheduled inspection. Only aboveground tanks included in the scope of this standard are applicable for inspection per this standard. Other standards, recommended practices, and other equivalent engineering and best practices exist that provide alternative inspection requirements for tanks defined within the scope of this standard and for tanks outside the scope of this standard. For example, API Standard 653, "Tank Inspection, Repair, Alteration, and Reconstruction," provides additional information pertaining to tanks built to API 650 and API 12C. API 12R1, "Recommended Practice for Setting, Maintenance, Inspection, Operation, and Repair of Tanks in Production Service," pertains to tanks employed in production service or other similar service.

SP-001 applies to the inspection of aboveground storage tanks, including shop-fabricated tanks, field-erected tanks, and portable containers, as defined in this standard, as well as the containment systems. The inspection and testing requirements for field-erected tanks are covered separately in Appendix B of the standard. Specifically, the standard applies to ASTs storing stable, flammable, and combustible liquids at atmospheric pressure with a specific gravity less than approximately 1.0 and those storing liquids with operating temperatures between ambient temperature and 200 degrees Fahrenheit (93.3/C). At a minimum, the following tank components shall be inspected (as applicable): tank, supports, anchors, foundation, gauges and alarms, insulation, appurtenances, vents, release prevention barriers, and spill control systems.

Section 3 addresses safety considerations, and Section 4 addresses AST inspector qualifications.

Section 5 of the standard addresses the criteria, including AST type, size, type of installation, corrosion rate, and previous inspection history, if any, that should be used to develop a schedule of inspections for each AST. Table 5.5 (Table of Inspection Schedules) places tanks into one of three categories and establishes different requirements regarding the type and frequency of periodic inspection by tank owner/operators as well as formal external and internal inspections by a certified inspector. The factors used for categorizing tanks include tank size, whether or not the tank is in contact with the ground, the presence or absence of secondary containment (or spill control), and the presence or absence of a continuous release detection method (CRDM).

[11] STI Standard SP-001, "Standard for the Inspection of Aboveground Storage Tanks," 3rd Edition, Steel Tank Institute, July 2005.

Section 6 provides guidelines for the periodic inspections conducted by the owner or his/her designee. The owner's inspector is to complete an AST Record for each AST or tank site, as

well as a Monthly Inspection Checklist and an Annual Inspection Checklist. Monthly inspections should monitor water accumulation to prevent Microbial Influenced Corrosion (MIC), and action should be taken if MIC is found. Additional requirements for field-erected tanks are in Appendix B of SP-001.

Section 7 of SP-001 contains the minimum inspection requirements for formal external inspections, which are to be performed by a certified inspector. Inspections should cover the AST foundations, supports, secondary containment, drain valves, ancillary equipment, piping, vents, gauges, grounding system (if any), stairways, and coatings on the AST. Original shell thickness should be determined using one of several suggested methods. Ultrasonic Thickness Testing (UTT) readings are to be taken at different locations of the AST depending upon whether the AST is horizontal, vertical, rectangular, and/or insulated. The final report should include field data, measurements, pictures, drawings, tables, and an inspection summary, and should specify the next scheduled inspection.

Section 8 of the standard details the minimum inspection requirements for formal internal inspections, which are to be performed by a certified inspector. A formal internal inspection includes the requirements of an external inspection with some additional requirements for specific situations that are outlined in the standard. Double-wall tanks and secondary containment tanks may be inspected by checking the interstice for liquid or by other equivalent methods. For elevated ASTs where all external surfaces are accessible, the internal inspection may be conducted by examining the tank exterior using such methods as Ultrasonic Thickness Scans (UTS). For all other situations, entry into the interior of the AST is necessary. Internal inspection guidelines are detailed separately for horizontal ASTs and for vertical and rectangular ASTs in Sections 8.2 and 8.3, respectively. Additional requirements for field-erected tanks are in Appendix B. The final report should contain elements similar to reports prepared for external inspections.

Section 9 addresses leak testing methods. For shop-fabricated ASTs, the standard references the Steel Tank Institute Recommended Practice R912, “Installation Instructions for Shop Fabricated Stationary Aboveground Storage Tanks for Flammable, Combustible Liquids.” The standard also references DOT regulations for portable containers:

- 49 CFR part 173.28, Reuse, reconditioning, and remanufacturing of packagings, mainly for drums;
- 49 CFR part 178.803, Testing and certification of intermediate bulk containers (IBCs); and
- 49 CFR part 180.605, or equivalent, for portable container testing and recertification.

Section 10 addresses the suitability for continued service based on the results of formal internal and/or external inspections. For ASTs that show signs of damage caused by MIC, the criteria for assessing their suitability for continued service differ based on the category they fall into (as per Section 5 of SP-001). Categories refer to the level of reduction of the shell thickness. For other tank damage, an engineer experienced in AST design or a tank manufacturer should determine if an inspection is required for any AST that was exposed to fire, natural disaster, excessive settlement, overpressure, or damage from cracking.

Section 11 of the standard details recordkeeping requirements. Appendix A presents supplemental technical information including terms commonly associated with ASTs, and Appendix B presents information for the inspection of field-erected ASTs.

For more information on SP-001, please visit the Steel Tank Institute Web site, http://www.steeltank.com.

APPENDIX 8

MS_4 KPDES PERMIT COVER LETTER

MS_4 KPDES PERMIT

STEVEN L. BESHEAR
GOVERNOR

ENERGY AND ENVIRONMENT CABINET
DEPARTMENT FOR ENVIRONMENTAL PROTECTION
DIVISION OF WATER
200 FAIR OAKS LANE
FRANKFORT, KENTUCKY 40601-1190
www.kentucky.gov

LEONARD K. PETERS
SECRETARY

January 14, 2014

Mr. Bill Rhodes
Eastern Kentucky University
521 Lancaster Avenue
Richmond, Kentucky 40475-3102

Re: Phase II MS4 General Permit
KPDES No.: KYG200053
AI: 2820
Madison County, Kentucky

Dear Mr. Rhodes:

Enclosed is the Kentucky Pollutant Discharge Elimination System (KPDES) permit for the above-referenced facility. This action constitutes a final permit issuance under 401 KAR 5:075, pursuant to KRS 224.16-050.

This permit will become effective on the date indicated in the attached permit provided that no request for adjudication is granted. All provisions of the permit will be effective and enforceable in accordance with 401 KAR 5:075, unless stayed by the Hearing Officer under Sections 11 and 13.

Any demand for a hearing on the permit shall be filed in accordance with the procedures specified in KRS 224.10-420, 224.10-440, 224.10-470 and any regulations promulgated thereto. Any person aggrieved by the issuance of a permit final decision may demand a hearing, pursuant to KRS 224.10-420(2), within thirty (30) days from the date of the issuance of this letter. Two (2) copies of request for hearing should be submitted in writing to the Energy and Environment Cabinet, Office of Administrative Hearings, 35-36 Fountain Place, Frankfort, Kentucky 40601 and the Commonwealth of Kentucky, Energy and Environment Cabinet, Division of Water, 200 Fair Oaks Lane, Frankfort, Kentucky 40601. For your record keeping purposes, it is recommended that these requests be sent by certified mail. The written request must conform to the appropriate statutes referenced above.

If you have any questions regarding the KPDES decision, please contact Abigail Rains, Wet Weather Section, Surface Water Permits Branch, at (502) 564-3410, extension 4891.

Further information on procedures and legal matters pertaining to the hearing request may be obtained by contacting the Office of Administrative Hearings at (502) 564-7312.

Sincerely,

Peter T. Goodmann, Acting Director
Division of Water

STEVEN L. BESHEAR
GOVERNOR

ENERGY AND ENVIRONMENT CABINET
DEPARTMENT FOR ENVIRONMENTAL PROTECTION
DIVISION OF WATER
200 FAIR OAKS LANE
FRANKFORT, KENTUCKY 40601
www.kentucky.gov

LEONARD K. PETERS
SECRETARY

FACT SHEET

KENTUCKY POLLUTANT DISCHARGE ELIMINATION SYSTEM PERMIT TO DISCHARGE FROM A SMALL MUNICIPAL SEPARATE STORM SEWER SYSTEM INTO WATERS OF THE COMMONWEALTH

KPDES No.: KYG200000 **Permit Writer:** Abigail Rains **Date:** **March** 1, 2010
AI No.: 35050

1. COVERAGE UNDER THIS GENERAL PERMIT

The Kentucky Division of Water (DOW) is reissuing the general permit that authorizes the discharge of pollutants in stormwater discharges associated with Phase II Municipal Separate Storm Sewer Systems (MS4s).

A. This permit covers the entire Commonwealth of Kentucky

B. Description of Applicant's Operation

The applicant operates a small municipal separate storm sewer system through such controls as legal authority, source identification, discharge characterization, management program, assessment of stormwater controls, and fiscal analysis to ensure adequate funding of the requirements.

2. PERMIT DURATION

Five (5) years

3. THE ADMINISTRATIVE RECORD

The Administrative Record, including the draft permit, fact sheet, public notice, comments received, and additional information is available for review at the Division of Water at 200 Fair Oaks Lane, 4th Floor, Frankfort, Kentucky 40601.

4. CONTACT

Abigail Rains
SWPB Permit Writer
(502) 564-8158, extension 4891.

5. **DEFINTIONS**

A. "Best Management Practices" or "BMPs" means schedules of activities, prohibitions of practices, maintenance procedures, and other management practices to prevent or reduce the pollution of waters of the Commonwealth. BMPs also include treatment requirements, operating procedures, and practices to control stormwater runoff.

B. "CFR" means Code of Federal Regulations, the official publication for federal regulations.

C. "Discharge" for the purpose of this permit, unless indicated otherwise, refers to discharges from the Municipal Separate Storm Sewer System (MS4), subject to Section 402 of the CWA.

D. "Green Infrastructure" is an adaptable term used to describe an array of products, technologies, and practices that use natural systems - or engineered systems that mimic natural processes - to enhance overall environmental quality and provide utility services. As a general principal, Green Infrastructure techniques use soils and vegetation to infiltrate, evapotranspirate, and/or recycle stormwater runoff. When used as components of a stormwater management system, Green Infrastructure practices such as green roofs, porous pavement, rain gardens, and vegetated swales can produce a variety of environmental benefits. In addition to effectively retaining and infiltrating rainfall, these technologies can simultaneously help filter air pollutants, reduce energy demands, mitigate urban heat islands, and sequester carbon while also providing communities with aesthetic and natural resource benefits.

E. "Illicit connection" means any connection to the municipal separate storm sewer that is not composed entirely of stormwater except discharges pursuant to a KPDES permit, other than the KPDES permit for discharges from the municipal separate storm sewer, and discharges resulting from fire fighting activities, or other *de minimis* activities allowable under the MS4 regulations referenced in 40 CFR 122.26(d) (2) (iv) (B) (1).

F. "Illicit discharge" means any discharge to the municipal separate storm sewer that is not composed entirely of stormwater except discharges pursuant to a KPDES permit (other than the KPDES permit for discharges from the municipal separate storm sewer and discharges resulting from fire fighting activities or other *de minimis* activities allowable under the MS4 regulations) and other discharges referenced in 40 CFR 122.26(d) (2) (iv) (B) (1).

G. "KAR" is an acronym for "Kentucky Administrative Regulations."

H. "KPDES" is an acronym for "Kentucky Pollutant Discharge Elimination System," the effluent permitting program in the Commonwealth of Kentucky for point source discharges.

I. "KRS" is an acronym for "Kentucky Revised Statutes."

J. "MEP", or "Maximum Extent Practicable," is the control standard for discharges from the Municipal Separate Storm Sewer Systems established by 40 CFR 122.34.

K. "MS4" is an acronym for "municipal separate storm sewer system".

L. "Municipal Separate Storm Sewer System" means a conveyance, or system of conveyances (including roads with drainage systems, municipal streets, catch basins, curbs, gutters, ditches, man-made channels, and storm drains): owned or operated by a state, city, town, county, district, association, or other public body (created by or pursuant to state law) having jurisdiction over disposal of sewage, industrial wastes, stormwater, or other wastes, including special districts under state law such as a sewer district, flood control district or drainage district, or similar entity, or an Indian Tribe or an authorized Indian tribal organization, or a designated and approved management agency under section 208 of the CWA that discharges to waters of the United States;

i. designed or used for collecting or conveying stormwater;
ii. which is not a combined sewer; and
iii. which is not part of a Publicly Owned Treatment Works (POTW) as defined at 40 CFR 122.2.

M. "NPDES" is an acronym for "National Pollutant Discharge Elimination System," the effluent permitting program for point source discharges that is administered by the United States Environmental Protection Agency.

N. "Permittee(s)" means the primary recipient of a KPDES permit.

O. "Outfall" means a "point source" at the point where a municipal separate storm sewer discharges to Waters of the United States, but does not include open conveyances connecting two (2) municipal separate storm sewers, or pipes, tunnels or other conveyances which connect segments of the same stream or other Waters of the Commonwealth and are used to convey waters of the United States.

P. "Point Source" means any discernible, confined, and discrete conveyance, including but not limited to, any pipe, ditch, channel, tunnel, conduit, well, discrete fissure, container, rolling stock, concentrated animal feeding operation, landfill leachate collection system, vessel or other floating craft from which pollutants are or may be discharged. This term does not include return flows from irrigated agricultural lands or agricultural stormwater runoff.

Q. "Storm Sewer" unless otherwise indicated, refers to a municipal separate storm sewer.

R. "Stormwater" means stormwater runoff, snowmelt runoff, surface runoff and drainage.

S. "Stormwater Quality Management Plan" or "SWQMP" is the written plan that details the "Stormwater Quality Management Program". The "Plan" is considered a single document, even though it actually consists of separate programs.

T. "Stormwater Quality Management Program" refers to a comprehensive program to manage the quality of stormwater discharged from the municipal separate storm sewer system.

U. TMDL" is an acronym for "Total Maximum Daily Load", a federally mandated program for impaired waters of the Commonwealth to determine the maximum assimilative capacity of a water for a specified pollutant and to allocate allowable pollutant loads to sources in the watershed.

V. "Water-Quality Control Structure" refers to the structures (e.g. grass swales, filter strips, infiltration basins, detention ponds, stormwater wetlands, natural filtration areas, sand filters and rain gardens, etc.). used to slow runoff, promote infiltration, and reduce sediments and other pollutants in stormwater runoff.

W. "Waters of the Commonwealth" means and includes any and all rivers, streams, creeks, lakes, ponds, impounding reservoirs, springs, wells, marshes, and all other bodies of surface or underground water, natural or artificial, situated wholly or partly within or bordering upon the Commonwealth or within its jurisdiction.

X. "Waters of the United States" as defined by the Clean Water Act, applies only to surface waters, rivers, lakes, estuaries, coastal waters and wetlands. Not all surface waters are legally "Waters of the United States." Generally those waters include the following:

a. All interstate waters
b. Intrastate waters used in interstate and/or foreign commerce
c. Tributaries of the above
d. Territorial seas at the cyclical high tide mark, and
e. Wetlands adjacent to all of the above.

Y. "Wet weather conveyances" are man-made or natural watercourses, including natural watercourses that have been modified by channelization, that flow only in direct response to precipitation runoff in their immediate locality and whose channels are above the groundwater table and which do not support fish and aquatic life and are not suitable for drinking water supplies.

6. BACKGROUND

Stormwater is the surface runoff that results from rain and snow melt. Urban development alters natural infiltration capability of the land and generates a host of pollutants that are associated with the activities of urban populations, thus causing an increase in stormwater runoff volumes and pollutant loadings in stormwater discharges to receiving waterbodies. Urban development increases the amount of impervious surface in a watershed as farmland, forests, and meadowlands with natural filtration characteristics, are converted into buildings with rooftops, driveways, sidewalks, roads, and parking lots with virtually no ability to absorb stormwater.

Polluted stormwater runoff is often transported to municipal separate storm sewer systems (MS4) and ultimately discharged into local rivers and streams without treatment.

The National Pollutant Discharge Elimination System (NPDES) stormwater regulations (40 CFR § 122.26) establish permit requirements for discharges from MS4s. The USEPA's Stormwater Phase II Rule (40 CFR § 122.34) establishes an MS4 stormwater management program that is intended to improve the nation's waterways by reducing the quantity of pollutants that stormwater picks up and carries into storm sewer systems during storm events.

Common pollutants include oil and grease from roadways, pesticides from lawns, sediment from construction sites, and carelessly discarded trash, such as cigarette butts, paper wrappers, and plastic bottles. When deposited into nearby waterways through MS4 discharges, these pollutants can impair the waterways, thereby discouraging recreational use of the resource, contaminating the drinking water supplies, and interfering with the habitat for fish, other aquatic organisms, and wildlife.

In 1999, USEPA promulgated rules establishing requirements for small MS4s. The federal regulations require Kentucky to permit stormwater discharges from small MS4s in the Commonwealth. A regulated small MS4 is defined as any small MS4 located in an "urbanized area" as defined by the U.S. Bureau of Census, as well as those MS4s located outside of an urbanized area that are designated a regulated small MS4 by the NPDES permitting authority (DOW)[40 CFR § 122.32 (a)]. A regulated small MS4 included storm drain conveyance systems owned or operated by a state, city of federal entity, a town, or other public entities, such as universities, prisons, hospitals, and departments of transportation where stormwater discharges directly to waters of the United States.

Rather than numeric 'end of pipe limits', these federal regulations establish six categories of Minimum Control Measures (MCMs) that must be implemented by permittees. Best Management Practices (BMPs) are put into use in order to implement the six MCMs. These 'narrative' BMPs reduce the amount of pollutants discharged in stormwater runoff.

7. PERMIT REQUIREMENTS

A. Maximum Extent Practicable (MEP)

This general permit requires the permittee to develop a stormwater quality

management program that is designed to reduce the discharge of pollutants to the **maximum extent practicable** (MEP). The MEP standard involves applying best management practices that are effective in reducing the discharge of pollutants in stormwater runoff. This requires that the permittee use known, available, and reasonable methods of prevention and control of stormwater discharges.

MEP is an iterative standard, which evolves over time as urban runoff management knowledge increases. As such, the permittee's MS4 program must continually be assessed and modified to incorporate improved programs, control measures, BMPs, etc., to attain compliance with water-quality standards.

B. Public Education and Outreach

The permittee must maintain a public education program and conduct public outreach activities in the community that focus on impacts from stormwater discharges to water bodies and the steps that the public can take to reduce pollutants in stormwater runoff.

There is a presumed greater support for the stormwater management program as the public gains a better understanding of the reasons why the SWQMP is necessary and important, an informed and knowledgeable community is crucial to the success of the a SWQMP. Public support is particularly beneficial when operators of small MS4s attempt to institute new funding initiatives for the program or seek volunteers to help implement aspects of the program. Education can lead to greater compliance with the local programs, as the public becomes aware of the personal responsibilities expected of them and others in the community, including individual actions they can take to protect or improve the quality of local waters.

C. Public Involvement and Participation

The small MS4 general permit contains performance measures for public participation and involvement. The permittee must comply with the state and local public notice requirements when implementing the public involvement and participation program. Activities may include representation of local stormwater management work groups, public hearings, and volunteer monitoring efforts.

Citizen involvement is critical to the success of a Stormwater Quality Management Program because citizens who participate in the decision making process are more likely to take an active role in its implementation of the stormwater program.

D. Illicit Discharge Detection and Elimination

Dry weather discharges into the MS4 system can contribute significant pollutants to receiving water bodies. Detecting and eliminating these illicit discharges involves complex detective work, which makes it challenging to establish a specific prescription to identify and eliminate all illicit connections.

To comply with this minimum control requirement, an MS4 operator must develop a map of the MS4 that locates all major MS4 outfalls and names of receiving waters; effectively prohibit discharges of non-stormwater to the MS4 through the use of an ordinance or other regulatory mechanism, and provide for enforcement procedures and actions; develop and implement a plan to detect and address non-stormwater discharges; and inform public employees, businesses, and the general public of the hazards associated with illegal discharges and improper disposal of waste.

E. Construction Site Stormwater Runoff Control

Stormwater runoff from construction sites often flows to MS4s and ultimately is discharged into receiving water bodies. Sediment is usually the main pollutant of concern. This control measure requires permittees to develop, implement, and enforce a program to reduce pollutants in stormwater runoff from construction activities that result in a land disturbance of one acre or greater. The program must include control of runoff from construction activity disturbing less than one acre if the construction is part of a larger common plan of development that would disturb one acre or more.

All permittees must incorporate the following elements into their local programs:

- Requirements for construction site operators to implement appropriate erosion and sediment control best management practices (BMPs) that, at a minimum, shall be as protective as Kentucky's General Permit for Stormwater Construction sites (KYR100000).
- An ordinance or other regulatory mechanism requiring proper sediment and erosion control and proper waste management controls at construction sites;
- Procedures for site-plan review for both private and public facilities that considers potential water-quality impacts;
- Procedures for site inspection and enforcement for both private and public facilities;
- Procedures for the receipt and consideration of information submitted by the public;
- Procedures for the tracking of the construction occurring within the MS4, inspections, compliance, and enforcement procedures taken, if any; and
- Procedures for providing educational and training measures for construction site operators.

F. Post-Construction Stormwater Management in New Development and Redevelopment

The Post-Construction Stormwater Management program is a key element of the MS4 permit and the Nation's and Commonwealth's strategy for achieving the goals of the Clean Water Act. An effective Post-Construction Stormwater Management program has the ability to positively impact the chemical, biological and overall health of the Commonwealth's streams, rivers and lakes by reducing the rate and volume and improving the quality of stormwater runoff from the MS4.

Post-Construction Stormwater Management refers to the activities that take place after construction occurs, and includes structural and non-structural stormwater controls that protect the environment from the harmful impacts of urban stormwater runoff. Stormwater BMPs incorporate planning practices and site improvements in a manner that promotes groundwater recharge, reduces the volume of, reduces peak discharge rates of and removes pollutants from runoff.

Non-Structural BMPs - DOW encourages the use of water-quality pollution-prevention measures in the post-construction site runoff MCM including non-structural BMP's, which are generally more cost-effective as a long-term solution due to the planning and design techniques used reduces maintenance costs over the life of the BMPs.

Specifically KDOW promotes consideration of non-structural, riparian-based

BMP's that protect and enhance of aquatic habitats, reduce stream bank erosion, reduce and attenuate flooding and promote green space.

Generally, non-structural BMPs incorporate site planning and design techniques including the use of open space, vegetated conveyance and buffers, natural infiltration, stream buffers, green infrastructure, and use low-impact development.

- Open Space - Research has demonstrated the water-quality degradation is proportional to the degree of land disturbance and the percent of impervious area. The use of open space can provide beneficial results in reducing the overall impervious areas within the MS4, thereby reducing stormwater quality and quantity impacts on receiving streams.
- Open Vegetated Conveyance - vegetated conveyance systems, such as grassy swales, should be used, when practicable. Design considerations should promote shallow, low velocity flow in a manner that facilitates sedimentation, infiltration and increased travel time to the discharge point.
- Natural Infiltration - Natural infiltration is an appropriate BMP that can maximize groundwater recharge which will reduce stormwater quality and quantity impacts on receiving streams.
- Local Ordinance and Regulations Review - The permittee is required to review, building codes and other local regulations to promote and encourage the implementation of non-structural BMP's including green infrastructure (green roofs; porous pavements; rain barrels; rain gardens), low impact and cluster developments and disconnection of impervious areas from riparian zones.

Structural BMPs - The permittee is required to develop a locally derived water-quality treatment standard that requires new development projects to implement controls to manage runoff through water-quality control structures. The standard shall be based on an analysis of precipitation records to determine the equivalent surface depth of runoff (e.g. 0.75 inches) produced from an 80th percentile precipitation event.

An 80th percentile precipitation event is defined as the amount of precipitation, based on daily rainfall records, that is greater than 80 percent of all daily rainfall events for the chosen period of record. To calculate the 80th percentile precipitation event, a record of at least 30 years should be used.

The permittee is required to develop and/or adopt structural BMP selection and design guidelines to aid in the planning and design of an appropriate BMP relative to its intended water-quality protection function, ease of maintenance and overall community acceptance. A potential short-list of structural stormwater and green infrastructure BMPs must include grass swales, filter strips, infiltration basins, dry, wet, and extended-wet detention ponds, stormwater wetlands, bio-retention areas, natural filtration areas, sand filters, pervious pavements and rain-gardens.

Special consideration is required to be given to the promotion and consideration of riparian restoration incorporating stream restoration, bio-engineering, natural channel design, habitat restoration and construction/enhancement of wetland features.

G. Pollution Prevention/Good Housekeeping for Municipal Operations

This control measure requires permittees to implement an operation and maintenance program to prevent or reduce polluted runoff from activities conducted by the municipality. The permittee must develop and implement an operation and maintenance (O & M) program that includes a training component, inventory of municipal facilities, maintenance activities, maintenance schedules, and long-term inspection procedures for structural and non-structural stormwater controls to reduce floatables and other pollutants discharged from the MS4. While this measure is meant primarily to improve or protect receiving water quality by altering municipal or facility operations to consider water quality, it also can result in a cost savings for the permittee, as proper and timely maintenance of storm sewer systems can help avoid repair costs from damage caused by age and neglect.

8. MONITORING

A. Monitoring relative to the TMDL

The permittee shall develop and implement an appropriate monitoring program that evaluates the effectiveness of the BMPs to address the TMDL. The program including monitoring strategies, locations, frequencies, and methods shall be submitted to the Division of Water for approval within 12 months of the approval date of the TMDL. Details of the monitoring plan and monitoring data should be included in the annual report required by the MS4 permit.

B. Development of an MS4 Program Monitoring Plan

The permittee shall develop an appropriate monitoring program that evaluates the effectiveness of the MS4 program and provides feedback for the permittee to change or improve the stormwater quality management program appropriately. The MS4 program monitoring plan shall be submitted to the Division of Water for approval before the end of the permit period. The MS4 program monitoring plan as approved by the Division of Water shall be implemented in the following permit period.

9. ANTIDEGRADATION

In the decision rendered by the U.S. Court of Appeals for the Sixth Circuit in Kentucky Waterways Alliance, et al. v. Johnson, et al., the court remanded to EPA its approval of certain sections of Kentucky's Antidegradation Policy Implementation Methodology as codified in 401 KAR 5:030. In response to that remand, the Division of Water has worked with various parties, including parties to the Kentucky Waterways Alliance, et al. v. Johnson, et al. case, to determine an approach to satisfy antidegradation considerations under 40 CFR 131.12. From that effort the division identified four categories of discharges for which antidegradation procedures will be addressed in the permits themselves or for which antidegradation requirements are satisfied by alternative equivalent processes. These four categories of discharges include:

1. Discharges permitted under general permits;

2. Discharges occurring under the approval of a regional wastewater facility plan;

3. New or expanded discharges associated with a project identified in the Kentucky Transportation Cabinet's six-year road plan; and

4. An individual MS4 permit that incorporates provisions that the permit holder address antidegradation considerations or that the permit includes practices and procedures to prevent lowering of water quality from new or expanded discharges from the MS4.

Prior to the remand and reconsideration of 401 KAR 5:030 (newly codified as 401 KAR 10:030), no antidegradation consideration had been made of new or expanded discharges from MS4s. The options for new or expanded discharges from MS4s include: 1) for each new or expanded discharge the MS4 must go through the antidegradation social-economic and alternatives analysis; 2) that the MS4 permit itself incorporate provisions that the permit holder address antidegradation considerations; or 3) the permit includes practices and procedures to prevent lowering of water quality from new or expanded discharges from the MS4. The division maintains that for new or expanded discharges from MS4 systems covered under this general permit the applicable antidegradation requirements are appropriately addressed by the requirements of this MS4 general permit, which includes mandatory procedures and controls, as well as standards of performance. In addition, the Division of Water's interpretation of what constitutes maximum extent practical (MEP), is presented in the requirements of this general permit. The division believes that discharges from small MS4s that are in compliance with this permit will protect water quality from degradation, and may improve water quality to receiving streams. The approach is consistent with the implementation procedures identified in 401 KAR 10:030 for this category of discharge and satisfies applicable antidegradation requirements that existing in-stream water uses and the level of water quality necessary to protect the existing uses shall be maintained and protected (401 KAR 10:030 Section 1(3)(b)).

For background, water-quality standards regulations are required to contain an antidegradation implementation policy. In addition, states are required to identify implementation methods that, at a minimum, provide a level of protection that is consistent with the federal antidegradation policy in 40 CFR 131.12. Waters designated as "High Quality" means surface waters categorized as high quality by the cabinet pursuant to 401 KAR 10:030, Section 1. The Division of Water has determined that the terms and conditions of this general permit sufficiently address the requirements of 40 CFR 131.12 and 401 KAR 10:030.

Kentucky is adopting an approach herein that requires the permittee to include in MCM #4 and MCM #5 measures and requirements specifically identified and intended to protect high quality waters from new or expanded discharges occurring from new development or re-development.

The specifics of this general permit with regard to Minimum Control Measure #4, Stormwater Construction, require that the permittee shall implement and enforce an ordinance or other regulatory mechanism that addresses stormwater runoff from active construction sites that disturb one acre or more, and active construction sites less than one acre in size that are part of a larger common plan of development or sale, located within the MS4. This general permit mandates that the permittee require construction site operators to implement appropriate erosion and sediment control best management practices (BMPs) that, at a minimum, are as protective as Kentucky's General Permit for Stormwater Construction sites (KYR100000). Further, the permit requires that the permittee include, by ordinance or other regulatory mechanism, a requirement that discharges from construction sites to high quality waters protect existing in-stream water uses and the level of water quality necessary to protect the existing uses. With regard to Minimum Control Measure #5, Post-Construction

Stormwater Runoff Control, for those areas of development and re-development that result in a new or expanded discharge from the MS4 to high-quality waters this general permit requires that the permittee adopt an ordinance or other regulatory mechanism that shall include standards for runoff control sufficient to protect existing in-stream water uses, and require the permittee to implement review procedures for areas of new development and re-development to ensure that these standards for runoff control are effective. This general permit also requires that the permittee shall develop a locally derived water-quality treatment standard that requires new development projects to implement controls to manage runoff through water-quality control structures. The standard shall be based on an analysis of precipitation records to determine the equivalent surface depth of runoff (e.g. 0.75 inches) produced from an 80th percentile precipitation event.

Discharges from small MS4s are also subject to maximum extent practicable (MEP) control standards. The requirements of the general permit for small MS4s reflect the division's interpretation of what constitutes MEP. In that regard this general permit reflects changes in the division's interpretation of MEP, including the addition of standards for discharges from stormwater construction sites, and new development or redevelopment on a post-construction basis, such as through ordinances implemented by permitted MS4 programs to limit peak discharges. This general permit includes new requirements that mandate the permittee: 1) incorporate into ordinance or other regulatory mechanism stormwater construction standards that, at a minimum, are as protective as Kentucky's General Permit for Stormwater Construction sites, and 2) develop a locally derived water-quality treatment standard that, at a minimum, requires new development projects to implement controls to manage through water-quality control structures the runoff produced from an 80th percentile precipitation event on the site. These new requirements of the MS4 permit reflect the Division of Water's interpretation of MEP and an improvement in control standards for runoff from small MS4s. In light of these improved MEP control standards the division believes that discharges from small MS4s that are in compliance with this permit will protect water quality from degradation, and may improve water quality to receiving streams.

The Division of Water maintains that the requirements of this general permit as they pertain to stormwater construction sites satisfy the antidegradation provisions of 401 KAR 10:030. The division recognizes that new construction activities (the initial source of most new or expanded discharges) are subject to antidegradation consideration under the stormwater construction general permit (KYR100000) or antidegradation review under an individual stormwater construction (or other applicable KPDES permits) and that compliance with these permits provides for compliance with antidegradation implementation policy.

The Division of Water gives consideration to the fact that so-called "new and expanded" (wet weather) discharges coming from an MS4 are to a large extent, existing discharges newly managed via the MS4 system. The division recognizes that the area served by the expanded MS4, under most circumstances, already discharges stormwater to the receiving stream during rain events. The so-called "new or expanded" discharges from the MS4 are in fact not "new" as a discharge, albeit perhaps "different," and may not be "expanded" as this general permit requires the permittee to develop, at a minimum, a locally derived water-quality treatment standard that requires new development projects to implement controls to manage the runoff produced from an 80th percentile precipitation event on the site. Accordingly, new or expanded discharges of stormwater from an MS4 are inherently different from a new or expanded discharge of process water under other KPDES permits.

The permittee shall periodically review procedures for areas of new development and re-development to ensure that these standards for runoff control are effective.

With the understanding of these considerations and the imposition of the aforementioned permit requirements, the division has clarified its expectation of the permitted MS4 programs to meet antidegradation requirements by complying with this permit. The goal of these requirements is to protect existing in-stream water uses and the level of water quality necessary to protect the existing uses.

Where the Division of Water determines through its oversight activities (e.g., SWQMP review, program audits, and inspection) that an MS4 program is not meeting its requirements under this permit, such a deficiency will constitute a violation of the permit and will require follow-up corrective action, which may include a determination that an individual MS4 permit is necessary.

The Division of Water has concluded that the requirements and controls in this general permit, in combination with other permits, are sufficient to protect existing in-stream water uses and the level of water quality necessary to protect the existing uses. In fact, the Division of Water believes that the enhanced requirements of this permit may result in the improvement of water quality of receiving streams. It is the conclusion of the Division of Water that this general permit is consistent with the implementation procedures identified in 401 KAR 10:030 for this category of discharge, and therefore satisfies applicable antidegradation requirements. The division believes the conditions of 401 KAR 10:030 have been satisfied by this permit action. The process described above for new or expanded discharges of stormwater runoff associated with this MS4 general permit are consistent with the requirements of 401 KAR 10:029, Section 1, 401 KAR 10:030, Section 1 and the ruling of the Sixth Circuit Court.

10. PUBLIC NOTICE INFORMATION

Please refer to the attached Public Notice for details regarding the procedures for a final permit decision, deadline for comments, and other information required by 401 KAR 5:075, Section 4(2)(e).

KPDES

KENTUCKY POLLUTANT DISCHARGE ELIMINATION SYSTEM

PERMIT

Permit No.: KYG200000
AI No.: 35050

AUTHORIZATION TO DISCHARGE UNDER THE KENTUCKY POLLUTANT DISCHARGE ELIMINATION SYSTEM

Pursuant to Authority in KRS 224,

Small Municipal Separate Storm Sewer Systems (sMS4)

are authorized to discharge stormwater runoff from a small Municipal Separate Storm Sewer System (MS4) to receiving waters of the Commonwealth in accordance with effluent limitations, monitoring requirements and other conditions set forth in PARTS I, II, III, and IV hereof. The permit consists of this cover sheet, a table of contents, and PART I 4 pages, PART II 13 pages, PART III 2 pages, PART IV 1 page.

This permit shall become effective on April 1, 2010.

This permit and the authorization to discharge shall expire at midnight, March 31, 2015.

March 1, 2010
Date Signed

Sandra L. Gruzesky, Director
Division of Water

DEPARTMENT FOR ENVIRONMENTAL PROTECTION
Division of Water, 200 Fair Oaks Lane, Frankfort, Kentucky 40601

Printed on Recycled Paper

TABLE OF CONTENTS

AUTHORIZATION TO DISCHARGE ..... Cover

PART I. APPLICABILITY **I-1**

A. PERMIT COVERAGE AREA 1
B. AUTHORIZED DISCHARGES 1
C. CO-PERMITTEES 1
D. OBTAINING AUTHORIZATION 2
E. DEFINITIONS 2

PART II. STORMWATER QUALITY MANAGEMENT PROGRAM **II-1**

A. LEGAL AUTHORITY 1
B. STORMWATER QUALITY MANAGEMENT PROGRAM 1
C. SWQMP REVIEW AND MODIFICATION 10
D. TOTAL MAXIMUM DAILY LOADS 11
E. DEVELOPMENT OF AN MS4 PROGRAM MONITORING PLAN 12
F. QUALIFYING LOCAL PROGRAM 13
G. FISCAL REQUIREMENTS 13

PART III. MONITORING AND REPORTING **III-1**

A. REPORTING REQUIREMENTS 1
B. CERTIFICATION 1
C. REOPENER CLAUSE 2

PART IV. STANDARD CONDITIONS FOR KPDES PERMIT **IV-1**

PART I. APPLICABILITY

A. PERMIT COVERAGE AREA

This permit covers small Municipal Separate Storm Sewer System (MS4) discharges located throughout the entire Commonwealth of Kentucky

B. AUTHORIZED DISCHARGES

The permittee identified in Section A of this Part is authorized to discharge stormwater runoff from small MS4 to waters of the Commonwealth in accordance with narrative effluent limitations, monitoring requirements and other conditions set forth in this Section.

1. Limitations

   The following discharges are not authorized by this permit:

   a. Discharges of non-stormwater into the MS4, except where such discharges have coverage under a separate KPDES permit or where those discharges have been determined not to represent significant sources of pollution, consistent with state and federal regulations; and

   b. Discharges of materials resulting from a spill, except emergency discharges required to prevent imminent threat to human health or to prevent severe property damage, provided reasonable and prudent measures have been taken to minimize the impact to water quality of the discharges.

   c. Discharges of any pollutant into any water for which a Total Maximum Daily Load (TMDL) has been established prior to the issuance of this permit unless the SWQMP includes a description of the BMPs and implementation procedures to be using to work towards compliance with a TMDL in accordance with Part 2, D. 1. of this general permit.

2. Cross-Connection between Sanitary Sewers and Storm Sewer/MS4 Prohibited

   a. This permit shall not be construed to authorize the discharge of sanitary wastewater through cross connections or to authorize other illicit discharges through the MS4, except as provided in 401 KAR 5:065.

C. CO-PERMITTEES

1. An MS4 may obtain coverage under this general permit as a co-permittee with one or more MS4s.

2. Each co-permittee is individually responsible for:

   a. Permit compliance for discharges from those areas of the MS4 where the permittee or co-permittee is the operator or owner;

   b. Ensuring that the six (6) minimum control measures are implemented for those areas of the MS4 where the permittee or co-permittee is the operator or owner; and

c. Any permit conditions that are established for specific areas of the MS4 owned or operated by that co-permittee.

3. Each co-permittee is jointly responsible for compliance with annual reporting requirements, except that a co-permittee is individually responsible for any parts of the annual report that relate exclusively to those areas of the MS4 where it is the operator.

4. Each permittee is encouraged to utilize Inter-Local Agreements (ILA), where appropriate, to comply with this permit.

D. OBTAINING AUTHORIZATION

1. A small MS4 may apply and obtain an individual permit for the discharges from the MS4. In that case, the Notice of Intent (NOI) mentioned below would not be a requirement of reapplication. The application would consist of the last annual report required from the previous permit accompanied with a letter requesting that the annual report and the accompanying letter with any program updates listed serve as the application for the individual permit.

2. Newly designated MS4s - To be authorized to discharge stormwater from a small MS4, an MS4 community must submit a Notice of Intent (NOI) and a copy of the Stormwater Quality Management Plan (SWQMP) within 180 days of notice of designation. The SWQMP shall provide the details of the stormwater program and how compliance with this permit will be obtained.

3. Currently designated MS4s - Within thirty (30) days of the effective date of this permit, all operators of small MS4s must submit a Notice of Intent (NOI) on the form provided in Appendix A of this permit.

   Within 180 days of the effective date of this permit, all operators of regulated MS4s shall submit a revised SWQMP that reflects the necessary changes to the stormwater quality management program to become compliant with this general permit, including any necessary compliance schedules.

E. DEFINITIONS

Definitions contained in the Kentucky Administrative Regulations (KAR) and Federal NPDES rules apply where one is not specified below. Unless otherwise specified in this permit, additional definitions of words or phrases used in this permit are for this permit only and are as follows:

A. "Best Management Practices" or "BMPs" means schedules of activities, prohibitions of practices, maintenance procedures, and other management practices to prevent or reduce the pollution of waters of the United States. BMPs also include treatment requirements, operating procedures, and practices to control stormwater runoff.
B. "CFR" means Code of Federal Regulations, the official publication for federal regulations.
C. "Discharge" for the purpose of this permit, unless indicated otherwise, refers to discharges from the Municipal Separate Storm Sewer System (MS4).
D. "Green Infrastructure" is an adaptable term used to describe an array of products, technologies, and practices that use natural systems - or engineered systems that mimic natural processes - to enhance overall environmental quality and provide utility services. As a general

principal, Green Infrastructure techniques use soils and vegetation to infiltrate, evapotranspirate, and/or recycle stormwater runoff. When used as components of a stormwater management system, Green Infrastructure practices such as green roofs, porous pavement, rain gardens, and vegetated swales can produce a variety of environmental benefits. In addition to effectively retaining and infiltrating rainfall, these technologies can simultaneously help filter air pollutants, reduce energy demands, mitigate urban heat islands, and sequester carbon while also providing communities with aesthetic and natural resource benefits.

E. "Illicit connection" means any connection to the municipal separate storm sewer that is not composed entirely of stormwater, except discharges pursuant to a KPDES permit, other than the KPDES permit for discharges from the municipal separate storm sewer, and discharges resulting from fire fighting activities, or other *de minimis* activities allowable under the MS4 regulations referenced in 40 CFR 122.26(d) (2) (iv) (B) (1).

F. "Illicit discharge" means any discharge to the municipal separate storm sewer that is not composed entirely of stormwater except discharges pursuant to a KPDES permit (other than the KPDES permit for discharges from the municipal separate storm sewer and discharges resulting from fire fighting activities or other *de minimis* activities allowable under the MS4 regulations) and other discharges referenced in 40 CFR 122.26(d) (2) (iv) (B) (1).

G. "KAR" means "Kentucky Administrative Regulations."

H. "KPDES" means "Kentucky Pollutant Discharge Elimination System," the effluent permitting program in the Commonwealth of Kentucky for point source discharges.

I. "KRS" means "Kentucky Revised Statutes."

J. "MEP", or "Maximum Extent Practicable," is the control standard for discharges from the Municipal Separate Storm Sewer Systems established by 40 CFR 122.34.

K. "MS4" means "municipal separate storm sewer system".

L. "Municipal Separate Storm Sewer System" means a conveyance, or system of conveyances (including roads with drainage systems, municipal streets, catch basins, curbs, gutters, ditches, man-made channels, and storm drains): owned or operated by a state, city, town, county, district, association, or other public body (created by or pursuant to state law) having jurisdiction over disposal of sewage, industrial wastes, stormwater, or other wastes, including special districts under state law such as a sewer district, flood control district or drainage district, or similar entity, or an Indian Tribe or an authorized Indian tribal organization, or a designated and approved management agency under Section 208 of the Clean Water Act that discharges to waters of the United States;

   i. designed or used for collecting or conveying stormwater;
   ii. which is not a combined sewer; and
   iii. which is not part of a Publicly Owned Treatment Works (POTW) as defined at 40 CFR 122.2.

M. "NPDES" means "National Pollutant Discharge Elimination System," the effluent permitting program for point source discharges that is administered in Kentucky as the Kentucky Pollutant Discharge Elimination System by the Division of Water.

N. "Permittee(s)" means the primary recipient of a KPDES permit.

O. "Outfall" means a "point source" at the point where a MS4 discharges to Waters of the United States, but does not include open conveyances connecting two (2) municipal separate storm sewers, or pipes, tunnels or

other conveyances which connect segments of the same stream or other Waters of the Commonwealth and are used to convey waters of the United States.

P. "Point Source" means any discernible, confined, and discrete conveyance, including but not limited to, any pipe, ditch, channel, tunnel, conduit, well, discrete fissure, container, rolling stock, concentrated animal feeding operation, landfill leachate collection system, vessel or other floating craft from which pollutants are or may be discharged. This term does not include return flows from irrigated agricultural lands or agricultural stormwater runoff.

Q. "Storm Sewer," unless otherwise indicated, refers to a MS4.

R. "Stormwater" means stormwater runoff, snowmelt runoff, surface runoff and drainage.

S. "Stormwater Quality Management Plan" or "SWQMP" is the written plan that details the "Stormwater Quality Management Program". The "Plan" is considered a single document, even though it actually consists of the six minimum control measures of the MS4 programs.

T. "Stormwater Quality Management Program" refers to a comprehensive program to manage the quality of stormwater discharged from the municipal separate storm sewer system.

U. TMDL" is an acronym for "Total Maximum Daily Load", a federally mandated program for impaired waters of the Commonwealth to determine the maximum assimilative capacity of a water for a specified pollutant and to allocate allowable pollutant loads to sources in the watershed.

V. "Water-Quality Control Structure" refers to the structures (e.g. grass swales, filter strips, infiltration basins, detention ponds, stormwater wetlands, natural filtration areas, sand filters and rain gardens, etc.). used to slow runoff, promote infiltration, and reduce sediments and other pollutants in stormwater runoff.

W. "Waters of the Commonwealth" means and includes any and all rivers, streams, creeks, lakes, ponds, impounding reservoirs, springs, wells, marshes, and all other bodies of surface or underground water, natural or artificial, situated wholly or partly within or bordering upon the Commonwealth or within its jurisdiction.

X. "Waters of the United States" as defined by the Clean Water Act, applies only to surface waters, rivers, lakes, estuaries, coastal waters and wetlands. Not all surface waters are legally "Waters of the United States". Generally those waters include the following:

a. All interstate waters
b. Intrastate waters used in interstate and/or foreign commerce
c. Tributaries of the above
d. Territorial seas at the cyclical high tide mark, and
e. Wetlands adjacent to all of the above.

Y. "Wet weather conveyances" are man-made or natural watercourses, including natural watercourses that have been modified by channelization, that flow only in direct response to precipitation runoff in their immediate locality and for which channels are above the groundwater table and which do not support fish and aquatic life and are not suitable for drinking water supplies.

PART II. STORMWATER QUALITY MANAGEMENT PROGRAM

The effluent limit requirements of this permit are narrative. The permittee is required to develop, implement, enforce and update, as needed, a SWQMP which shall include controls intended to reduce the discharge of pollutants from its MS4 conveyances consistent with 40 CFR 122.34. The Stormwater Quality Management Program shall provide controls that shall consist of a combination of best management practices (BMPs), control techniques and systems, design and engineering methods, public participation and education, and other appropriate provisions designed to limit the discharge of pollutants from the MS4 conveyances which are environmentally beneficial and technically and economically feasible. The requirements of this general permit represent Maximum Extent Practible (MEP).

A. LEGAL AUTHORITY REQUIREMENTS

The permittee shall establish legal authority to control discharges to and from those portions of the MS4 over which it has jurisdiction. For newly designated MS4s, this legal authority must be established within 24 months of the notice of permit coverage. The legal authority may be a combination of statutes, ordinances, permits, contracts, orders, or inter-jurisdictional agreements between permittee with adequate existing legal authority to accomplish items 1-5 below:

1. Control the contribution of pollutants to the MS4 by stormwater discharges associated with construction activity, and post-construction activity for new development and redevelopment projects;

2. Prohibit illicit non-stormwater discharges to the MS4, and implement enforcement procedures and actions;

3. Prohibit the discharge of spills and the dumping or disposal of materials (e.g. industrial and commercial wastes, trash, used motor vehicle fluids, leaf litter, grass clippings, animal wastes, etc.) other than stormwater into the MS4;

4. Enforce compliance with conditions in ordinances, permits, contracts and orders relating to discharge to the MS4s; and

5. Carry out all inspection, surveillance and monitoring procedures necessary to determine compliance with permit conditions including the prohibition on illicit discharges to the municipal separate storm sewer.

B. STORMWATER QUALITY MANAGEMENT PROGRAM

The stormwater quality management program is an integral part of the Commonwealth's overall watershed management program, in accordance with 401 KAR 5:060 and 40 CFR 122.26 (d) (2). Implementation of the stormwater quality management program to effectively reduce pollutants (including floatables) in discharges from municipal separate storm sewers must include program elements that address public education and outreach, public participation and involvement, illicit discharge detection and elimination, construction site runoff control, post-construction stormwater management for new development and redevelopment, and good housekeeping and pollution prevention in municipal operations. The program shall be formalized in the SWQMP. This written plan details the procedures in which the permittee will implement the required six minimum control measures and is a dynamic document that should be modified to meet the needs of the permittee using the timeframes described on Part II, Page II-10 C. STORMWATER QUALITY MANAGEMENT PLAN REVIEW AND MODIFICATION

1. Public Education and Outreach

a. The permittee shall maintain a public education program and conduct public outreach activities in the community that focus on impacts from stormwater discharges to water bodies and the steps that the public can take to reduce pollutants in stormwater runoff. The public education program shall be designed to achieve measurable improvements in the target audience's understanding of stormwater pollution and actions of prevention. The public education and outreach activities are the sole responsibility of the permittee and any co-permittees. However, the permittee is encouraged to utilize the Inter-Local Agreements with KYTC to take advantage of the public outreach program developed by KYTC.

b. The permittee shall utilize as guidance the Stormwater Education Toolkit developed by the Kentucky Transportation Cabinet with support from the Division of Water, EPA's Nonpoint Source Toolbox, found at http://www.epa.gov/nps/toolbox/, or substitute alternate outreach materials that provide an effective equivalent.

c. The permittee shall prioritize public education and outreach efforts to focus on pollutants impairing or threatening the local waterways.

d. The permittee shall demonstrate that the education and outreach efforts are targeted to the appropriate audiences and balanced between policy-makers, local citizens, and other stakeholders.

e. The permittee shall measure the targeted audience understanding of their impacts on water quality and the adoption of the behavior changes resulting from the permittee's public education and outreach efforts. The resulting measurements shall be used to direct education and outreach resources more effectively.

f. The permittee shall track activities relative to this program element as necessary to document compliance with permit requirements and prepare the annual system-wide report pursuant to Part III.A. of the permit.

2. Public Involvement/Participation

a. The permittee shall implement a public involvement/participation program. Activities may include representation on local stormwater management work groups, public notices and public hearings, facilitating education volunteers, assisting with program coordination and monitoring efforts. The permittee shall provide public notice of program participation opportunities by methods designed to reach the intended audience.

b. The permittee shall facilitate opportunities for citizen volunteers who want to participate in the MS4 program (e.g., participating on a Stormwater Advisory Council, volunteer stream monitoring programs, storm-drain marking, riparian planting, stream clean-up events or an effective equivalent).

c. The permittee shall develop and implement a method of advertising the public involvement opportunities listed above in 2b. Newly designated programs shall implement this advertising method within 180 days of the notice of permit coverage. Current MS4 programs shall develop and implement the advertising method within sixty (60) days of the effective date of this permit. The permittee may: develop a website that

includes information that will inform stakeholders of actions they can adopt that result in behavioral changes that may improve water quality; provide press releases or advertisements of activities to local cable networks, radio stations and/or newspapers; or other alternate methods that provides an effective equivalent communication.

d. The permittee shall track activities relative to this program element as necessary to document compliance with permit requirements and prepare the annual system-wide report pursuant to Part III.A. of the permit.

3. Illicit Discharge Detection and Elimination

a. Newly-designated MS4 programs shall, within 24 months of the notice of permit coverage, implement and enforce an ordinance or other regulatory mechanism that prohibits illicit discharges to the MS4. Current MS4 programs shall implement and enforce this required ordinance or other regulatory mechanism upon issuance of this permit.

b. The permittee shall implement, and enforce a program to prohibit, detect, and address illicit discharges, including illegal dumping to the MS4 system, per applicable state and federal requirements. The program shall include:

i. Procedures for locating priority areas likely to have illicit discharges.

ii. Field assessment activities, including visual inspection of priority areas identified in i., above, during dry weather and for the purposes of verifying outfall locations, identifying previously unknown outfalls, and detecting illicit discharges.

iii. Procedures to provide for the investigation of any complaints, reports, or monitoring information that indicates a potential illicit discharge, spill, or illegal dumping. The permittee shall immediately investigate problems and violations determined to be emergencies or otherwise judged urgent or severe. Where water quality impairments are deemed severe or urgent, the permittee shall promptly refer the incidents to the Department for Environmental Protection's Environmental Emergency 24-hour hotline at (502) 564-2380 or (800) 928-2380.

iv. Timeframes for the investigation and removal of illicit discharges shall be established and outlined in the permittees' illicit discharge detection and elimination program.

v. Procedures for tracing the source of an illicit discharge; including visual inspections, and when necessary, collecting and analyzing water samples, and other detailed inspection procedures.

vi. Procedures for removing the source of the discharge; including notification of appropriate authorities, notification of property owners; technical assistance for eliminating the discharge; follow-up inspections; and enforcement if the discharge is not eliminated.

The permittee shall initiate an investigation, where practicable, of a report or discovery of a suspected illicit connection to determine the source of the connection, and the party responsible

for the connection. Upon confirmation of the illicit nature of a storm-drain connection, the permittee(s), in coordination with other responsible agencies, shall require the responsible party to remove the illicit connection. The permittee shall verify the correction plan is implemented by the responsible party.

c. The permittee shall provide appropriate training for municipal field staff on the identification and reporting of illicit discharges into the MS4.

d. The permittee shall develop, and maintain a storm-sewer system map, showing the location of all known major outfalls, as defined herein, and the names and location of all waters of the Commonwealth that receive discharges from those outfalls. If this mapping is completed using Geographical Information Systems (GIS) or Computer Aided Drafting (CAD) software, the permittee shall provide to the Division of Water, at a minimum, the MS4 boundary and the mapped infrastructure in either ESRI shape file formats (to include the .shp, .shx, and .dbf files) or geo-referenced AutoCAD drawings (.dwg file format).

e. The permittee shall provide the location of all known major outfalls. The outfalls shall be identified in the annual report for Year 2 of the permit; with updates describing any additionally identified major outfalls in each subsequent annual report. For the purposes of this permit a "major outfall" is defined as follows:

   i. A pipe (or closed conveyance) system with a cross-sectional area equal to or greater than 7.07 square feet (e.g., a single circular pipe system, with an inside diameter of 36 inches or greater); if applicable.

   ii. A single conveyance other than a pipe, such as an open channel ditch, which is associated with a drainage area of more than 50 acres; if applicable.

f. The permittee shall conduct dry-weather screening of representative outfalls. The recommended level of effort is twenty percent (20%) of the major outfalls per year. All the major outfalls shall be addressed within the permit term. Screening shall include at a minimum, the visual inspection of the discharge for indicators of pollutants. Indicators shall include odor, oil sheens, discoloration, and high degrees of siltation or aquatic plant growth. Where potential excessive pollutants are indicated, the permittee shall develop a plan to determine potential source(s) and eliminate the discharge. The illicit discharge and detection elimination plan may require follow-up field water-quality sampling and/or analysis or laboratory analyses to determine the pollutant source and most effective plan of action.

g. Within twelve months of the effective date of this permit, the permittee shall have a mechanism and protocols in place that provide for the public reporting of spills and other discharges. Newly-designated MS4 shall have this mechanism in place, within twelve months of the date of permit coverage. The permittee shall keep a record of spill reports received and actions taken, and include a general summary in the annual report.

h. In conjunction with the Public Education and Outreach program, the permittee shall inform public employees, businesses, and the general

public of hazards associated with illegal discharges and improper disposal of waste.

i. If, in the course of illicit discharge detection, it is demonstrated that a sanitary sewer line failure or defect is a source to the MS4, the permittee shall inform the responsible entity and the Division of Water's Regional Office. If the permittee is the responsible entity, the permittee shall proceed to remediate the discharge by following a corrective action plan or a Sanitary Sewer Overflow Plan on a schedule approved by the Division of Water.

j. The permittee shall adopt and implement procedures for Illicit Discharge program evaluation and assessment, including tracking the number and type of spills or illicit discharges identified, inspections made; and any feedback received from public education efforts.

k. The permittee shall track activities relative to this program element as necessary to document compliance with permit requirements and prepare the annual system-wide report pursuant to Part III.A. of the permit.

4. Construction Site Stormwater Runoff Control

a. Within 24 months of the notice of permit coverage, newly-designated MS4 programs shall implement and enforce an ordinance or other regulatory mechanism that addresses stormwater runoff from active construction sites that disturb one acre or more, and active construction sites less than one acre in size that are part of a larger common plan of development or sale, located within the MS4. Current MS4 programs shall implement and enforce an ordinance or other regulatory mechanism that addresses stormwater runoff from active construction sites that disturb one acre or more, and active construction sites less than one acre in size that are part of a larger common plan of development or sale, located within the MS4 upon issuance of this permit. The ordinance or other regulatory mechanism shall include, at a minimum:

i. Requirements for construction site operators to implement appropriate erosion and sediment control best management practices (BMPs) that, at a minimum, shall be as protective as Kentucky's General Permit for Stormwater Construction sites (KYR100000).

ii. Requirements for construction site operators to control waste such as discarded building materials, concrete truck washout, chemicals, litter, and sanitary waste at the construction site that may cause adverse impacts to water quality.

iii. Requirements for demonstration that a notice of intent for coverage under a stormwater construction general permit, an application for a stormwater construction individual permit, or the BMP plan of a KPDES permit has been submitted for those sites one acre and greater.

iv. Establishment of authority for site-plan review to affirm compliance with local ordinances, which incorporate consideration of potential water-quality impacts.

v. Establishment of authority for receipt and consideration of information submitted by the public.

vi. Establishment of authority for site inspections and enforcement of control measures. Factors such as the nature of construction activity, topography, and the characteristics of soils and receiving water quality should be considered in determining the frequency of inspection.

vii. A requirement that discharges from construction sites to high quality waters will protect existing in-stream water uses and the level of water quality necessary to protect existing in-stream water uses consistent with Kentucky Stormwater Construction Permit (KYR100000).

b. The permittee shall develop, implement, and enforce a program to reduce pollutants in stormwater runoff from active construction sites. The program to be implemented shall include, at a minimum:

i. A permitting process with plan review to affirm compliance with local ordinances, inspection, and enforcement capability for all projects subject to this program as described above.

ii. Procedures for periodic inspections of all known permitted construction sites during construction to verify proper installation and maintenance of required erosion and sediment controls. A recommended level of effort for periodic inspections should be all active sites monthly and all new sites within two (2) weeks after initiation of land disturbance. Enforcement shall be conducted as appropriate based on the inspection.

iii. Development and implementation of an enforcement strategy that includes escalating enforcement remedies to respond to issues of non-compliance.

iv. A procedure must be developed to inventory projects and prioritize sites for inspection. The inventory should track the results of inspections, enforcement procedures taken, if any. A summary of inspection and enforcement activities that have been conducted shall be included in the annual report.

v. A training program for MS4 staff in the fundamentals of erosion prevention and sediment control and in how to review erosion and sediment control plans or Stormwater Pollution Prevention Plans.

vi. Procedures for providing educational and training measures for construction-site operators.

c. The permittee shall track activities relative to this program element as necessary to document compliance with permit requirements and prepare the annual system-wide report pursuant to Part III.A. of the permit.

5. <u>Post-Construction Stormwater Management in New Development and Redevelopment</u>

Post-Construction Stormwater Management refers to the activities that take place after construction occurs, and includes structural and non-structural controls to obtain permanent stormwater management over the life of the

property's use. Structural stormwater controls include, but are not limited to, grass swales, filter strips, infiltration basins, detention ponds, stormwater wetlands, natural filtration areas, sand filters and rain gardens. Non-structural BMPs incorporate site planning and design techniques including, but not limited to, open spaces, vegetated conveyances and buffers, natural infiltration and low impact development. The post-construction BMPs chosen should be appropriate for the local community, shall be designed to minimize water quality impacts, and shall attempt to maintain pre-development runoff conditions. Each new development and redevelopment project should have a stormwater control component.

a. Newly-designated MS4 programs shall, within 24 months of the notice permit coverage, implement and enforce an ordinance or other regulatory mechanism that addresses post-construction stormwater runoff from active construction sites that disturb at least one acre, and projects less than one acre that are part of a larger common plan of development or sale, located within the MS4. Current MS4 programs shall implement and enforce this required ordinance or other regulatory mechanism.

b. The permittee must implement and enforce a program to address stormwater runoff from new development and redevelopment projects that disturb at least one acre, and projects less than one acre that are part of a larger common plan of development or sale, located within the MS4. The program shall apply to private and public development, including roads.

c. Newly-designated MS4 programs shall, within 24 months of the notice of permit coverage, develop and submit to the Division of Water, an on-site stormwater runoff quality treatment standard for all new development and redevelopment projects. Current MS4 programs shall, within 12 months of the effective date of this permit, develop and submit to the Division of Water, an on-site stormwater runoff quality treatment standard, to be adopted by ordinance or other regulatory mechanism for all new development and redevelopment projects. The proposed local standard will require, in combination or alone, management measures that are designed, built and maintained to treat, filter, flocculate, infiltrate, screen, evapo-transpire, harvest and reuse stormwater runoff, or otherwise manage the stormwater runoff quality. The permittee shall develop a locally derived water-quality treatment standard that requires new development projects to implement controls to manage runoff through water-quality control structures. The standard shall be based, at a minimum, on an analysis of precipitation records to determine the equivalent surface depth of runoff (e.g. 0.75 inches) produced from an 80th percentile precipitation event.

d. For those areas of development and re-development that result in a new or expanded discharge from the MS4 to high-quality waters, the ordinance or other regulatory mechanism shall include standards for runoff control that are considered sufficient to protect existing in-stream water uses and the level of water quality necessary to protect the existing uses. The permittee shall periodically review procedures for areas of new development and re-development to ensure that these standards for runoff control are effective.

For projects that cannot meet this water-quality treatment standard, the permittee may adopt two alternatives: off-site mitigation and payment-in-lieu.

i. The off-site mitigation option entails infiltration/ evapotranspiration/reuse measures that may be implemented at another location in the same sewershed/watershed as the original project, approved by the permittee(s). The permittee shall identify priority areas within the sewershed or watershed in which mitigation projects can be completed.

ii. The payment-in-lieu option allows the owner/operator of a construction site that disturbs at least one acre or a project that is less than one acre but is part of larger common plan of development or sale to choose to make a payment to the permittee, in lieu of implementing post-construction BMPs. The permittee will apply these in-lieu funds to a public stormwater project.

For either of these options to be available, the permittee must ensure the proper legal authority, create an inventory of appropriate mitigation projects, and develop appropriate institutional standards and management systems to value, evaluate and track transactions.

e. Within twelve (12) months of the effective date of the permit current MS4 programs shall review and evaluate municipal policies related to building codes, or other local regulations, with a goal of identifying regulatory and policy impediments to the installation of green infrastructure, such as green roofs, porous pavements, water harvesting devices, grassed swales instead of curb and gutter, rain barrels and cisterns; downspout disconnection, etc.

f. The permittee shall develop and implement project review, approval, and enforcement procedures for new development and redevelopment projects that disturb greater than one acre, and projects less than one acre that are part of a larger common plan of development or sale. Further requirements for project review and approval are as follows:

i. Develop procedures for the site-plan review and approval process and a required re-approval process when changes to stormwater management measures are required.

ii. Develop procedures for a post-construction process to demonstrate and document that post-construction stormwater measures have been installed per design specifications, which includes enforceable procedures for bringing noncompliant projects into compliance.

g. The permittee shall require all new development or redevelopment to establish and enter into a long-term maintenance agreement and maintenance plan approved management practices for property owners. Alternatively, the permittee may establish other enforceable mechanisms for requiring long-term maintenance of structural and non-structural BMPs. Such authorities shall allow the MS4, or its designee, to conduct inspections of the management practices and also account for transfer of responsibility in leases and/or deed transfers. The agreement shall also allow the MS4s, or its designee, to perform necessary maintenance or corrective actions neglected by the property owner/operator, and authority to recover costs from the property owner/operator when the owner/operator has not performed the necessary maintenance.

h. In order to verify that all stormwater management practices are operating correctly and are properly maintained, the permittee shall establish and implement procedures for inspection of a representative number of

installed Best Management Practices (BMPs) (e.g. the BMPs that were designed, built and maintained to treat, filter, flocculate, infiltrate, screen, evapo-transpire, harvest and reuse stormwater runoff, or otherwise manage the stormwater runoff quality) annually, with the goal of completing an inspection of all BMPs within the MS4 during the permit cycle. Alternatively, the permittee may develop a program for property owner self-inspection documentation with oversight by the permittee(s).

i. The permittee shall create a program to notify the BMP owner or operator of deficiencies discovered during a maintenance inspection. The permittee must conduct subsequent inspections to ensure completion of required repairs. If repairs are not made, the permittee shall enforce its correction orders and, if need be, perform the necessary work and assess against the owner the costs incurred for repairs.

j. The permittee shall demonstrate compliance with the requirements for post-construction controls by summarizing the following in the annual report. A summary of the number and types of projects that the permittee reviewed for new and redevelopment considerations and the types of BMPs installed including green infrastructure and buffers.

   i. A summary of management practice maintenance inspections conducted by the permittee(s), including a summary of the number requiring maintenance or repair, and the number of enforcement actions taken.

   ii. A summary of any changes to local ordinances to accommodate green infrastructure alternatives.

   iii. MS4 staff must be trained in the fundamentals of long-term stormwater-quality treatment management practices and in how to review such practices on construction plans and how to inspect practices for long-term protection, operation and maintenance.

k. The permittee shall track activities relative to this program element as necessary to document compliance with permit requirements and prepare the annual system-wide report pursuant to Part III.A. of the permit.

6. <u>Pollution Prevention/Good Housekeeping for Municipal Operations</u>

a. The permittee must develop and implement an Operation and Maintenance (O & M) program that includes a training component with the goal of preventing or reducing pollutant runoff from municipal operations.

b. The O & M program must include employee training to prevent and reduce stormwater pollution resulting from activities such as parks and open space maintenance, fleet and building maintenance, new construction and land disturbances, stormwater system maintenance, and green infrastructure maintenance. The permittee is encouraged to utilize training materials that are available from the EPA, the Division of Water, and other organizations.

c. The O & M program shall include an inventory of municipal facilities, maintenance activities, maintenance schedules, and ongoing inspection procedures for structural and non-structural BMPs. These BMPs shall be designed to reduce floatables and other pollutants discharged from the separate storm sewers; provide controls for reducing the discharge of pollutants from municipally-owned and operated streets, roads, highways, municipal parking lots, maintenance and storage yards, and fleet and

maintenance shops with outdoor storage areas. BMPs are needed to control runoff from salt/sand storage locations and snow disposal areas operated by the permittee(s), as well as waste transfer stations. The O & M program must incorporate procedures for properly disposing of waste (such as dredge spoil, accumulated sediments, floatables, and other debris) removed from the separate storm sewers and areas listed above. The O & M program shall include methods to ensure that new flood-management projects assess the impacts on water quality protection devices or practices.

d. The permittee shall track activities relative to this program element as necessary to document compliance with permit requirements and prepare the annual system-wide report pursuant to Part III.A. of the permit.

C. STORMWATER QUALITY MANAGEMENT PLAN REVIEW AND MODIFICATION

1. The permittee shall annually evaluate the effectiveness of the SWQMP and BMPs implemented to comply with this general permit. The permittee shall modify ineffective BMPs, and modify ineffective schedules of effective BMPs.

2. The permittee may modify the SWQMP during the life of the permit in accordance with the following procedures:

   a. Modifications that add but neither subtract nor replace, components, controls, or requirements may be made by the permittee at any time. A description of the modification shall be included in the Annual Report;

   b. Modifications that replace an ineffective or infeasible stormwater control, which is specifically identified in the SWQMP along with an alternate stormwater control, may be made by the permittee at any time. A description of the replacement stormwater control shall be included in the following Annual Report along with the following information:

      i. An analysis of why the former stormwater control was ineffective or infeasible (including cost-prohibitive);

      ii. Expectations on the effectiveness of the replacement stormwater control; and

      iii. An analysis of why the replacement stormwater control is expected to achieve the goals of the BMP which this control replaced;

   c. Modifications to adjust the schedule for maintenance activities or the frequency of inspections identified in the SWQMP may be made by the permittee on an annual basis. The permittee must include in the Annual Report, a description of the adjustment to the schedule along with the following information:

      i. An analysis of why the former schedule was ineffective or infeasible; and

      ii. Expectations on the effectiveness of the replacement schedule.

   d. Modifications included in the Annual Report shall be signed by the permittees affected by that modification, and shall include a certification that the permittee was given an opportunity to comment on

proposed changes; and

e. The permittee shall implement the SWQMP for all new areas added to the MS4 (or for which they become responsible for implementation of stormwater quality controls) as expeditiously as practicable. A description of the implementation schedule shall be provided in the annual report. Implementation of the program in any new area shall consider the plans in the SWQMP of the previous MS4 ownership.

3. The permittee may proceed with any uncompleted programs from the previous permit cycle to provide the continuation of positive activities towards improvement of water quality. A compliance schedule shall be submitted to the Division of Water for approval that delineates the tasks and the anticipated compliance date.

4. The content and provisions of the SWQMP, as discussed in Part II, are not considered permit conditions. The SWQMP is an implementation plan to be utilized as a tool by the permittee to facilitate compliance with the six program elements outlined in this permit.

D. TOTAL MAXIMUM DAILY LOADS AND IMPAIRED WATERS

1. Total Maximum Daily Loads (TMDLs)

If there is an approved existing TMDL for an impaired waterbody into which the permitted MS4 discharges and for which the MS4 causes or contributes to water quality impairment(s), the Division of Water will review the TMDL and applicable wasteload allocation(s) to determine whether the TMDL allocates pollutant reductions for stormwater discharges. If current discharges from the MS4 are not meeting TMDL allocations, the Division of Water will notify the permittee of that finding and require that the SWQMP identified in Part II of this general permit be modified. This modification will occur in conjunction with the normal SWQMP updating process, in accordance with Part II.C.2.d of this permit relating to Plan Implementations and Modifications. This modification will include any applicable and appropriate BMPs to implement the TMDL within a reasonable timeframe. The TMDL shall be implemented by the MS4 to the Maximum Extent Practicable (MEP). The Division of Water may require the MS4 to obtain an individual MS4 permit in order to meet the requirements of the TMDL.

2. Evaluation of TMDL Allocations

During the permit term, if there is an approved TMDL established for a pollutant of concern in the permittee's stormwater discharges, the permittee shall identify the impaired stream segment(s) and/or tributaries to those impaired stream segments and the location of all known MS4 major outfalls discharging a pollutant of concern under the TMDL to those segments or occurring within those segments. The permittee shall evaluate the discharge load associated with the identified MS4 major outfalls for the pollutant, including monitoring, reporting and/or otherwise, at issue. Prior to any reopening of this permit under Part III.C., the permittee shall consider and propose to the maximum extent practicable, applicable and appropriate best management practices guided by the wasteload goal of the TMDL, and a schedule of implementation for those Best Management Practices. Nothing herein shall prevent the permittee from pursuing a variance or exceptions based upon a use attainability analysis or the criteria for exceptions set forth in 401 KAR 10:031. Applicable limitations, conditions and requirements contained in the TMDL are also to be addressed in the SWQMP.

3. Monitoring relative to the TMDL

The permittee shall develop and implement an appropriate monitoring program that is designed to evaluate the effectiveness of the BMPs to address the TMDL. An effective monitoring program could include:

a. Effluent monitoring at selected outfalls that are representative of particular land uses or geographical areas that contribute to pollutant loading before and after implementation of stormwater control measures; or

b. Monitoring of pollutants of concern in receiving waterbodies, both upstream and downstream of MS4 discharges, over an extended period of time; or

c. In-stream biological monitoring at appropriate locations to demonstrate the recovery of biological communities after implementation of stormwater control measures.

The program including monitoring strategies, locations, frequencies, and methods shall be submitted to the Division of Water for approval within 12 months of the approval date of the TMDL. Details of the monitoring plan and monitoring data should be included in the annual report required by the MS4 permit.

4. Impaired Water Bodies

For impaired waters that lack a TMDL, the permittee shall identify impaired waters into which the MS4 discharges, and evaluate its Best Management Practices to be included in the SWQMP, at a minimum, this information should be updated in the annual report following the finalization of the Kentucky's Section 303(d) list of impaired waters (every two years) with respect to any new or expanded MS4 discharges for pollutants of concern to ensure effectiveness of post construction control requirements to achieve the MEP standard, evaluation may be conducted on a watershed basis.

E. DEVELOPMENT OF AN MS4 PROGRAM MONITORING PLAN

1. The permittee shall develop an appropriate monitoring program that evaluates the effectiveness of the MS4 program and provides feedback for the permittee to change or improve the stormwater quality management program appropriately. The MS4 program monitoring plan shall be submitted to the Division of Water for approval before the end of the permit period. The MS4 program monitoring plan, as approved by the Division of Water, shall be implemented in the following permit period.

An effective MS4 program monitoring plan should include one or more of the following options:

a. Effluent monitoring of pollutants and conditions of concern at selected outfalls that are representative of particular land uses or geographical areas that contribute to pollutant loading before and after implementation of stormwater control measures;

b. Monitoring of pollutants and conditions of concern in receiving waterbodies, both upstream and downstream of MS4 discharges, over an extended period of time;

c. In-stream biological monitoring at appropriate locations to demonstrate the recovery of biological communities after implementation of stormwater control measures; or

d. Monitoring of other parameters or conditions that provides a measure of the effectiveness of the stormwater quality management program.

F. QUALIFYING LOCAL PROGRAMS

A Qualifying Local Program (QLP) is an MS4 stormwater management program for stormwater discharges associated with construction activity that has been formally approved by the Division of Water and EPA. If a construction site is within the jurisdiction of the MS4 with QLP designation and has obtained a notice of coverage from a QLP, the operator of the construction activity is authorized to discharge stormwater associated with construction activity under this general permit without seeking a permit from the Division of Water.

The aspects of a qualifying local program (QLP) must demonstrate:

1. An MS4 which has been through more than two MS4 permit cycles;
2. An MS4 with proven enforcement capability; and
3. An MS4 with an established record keeping and tracking system for issuing coverages, inspections and enforcement activities.

G. FISCAL REQUIREMENTS

Funding shall be established and maintained to ensure the accomplishment of the activities required by this permit.

PART III. REPORTING

A. REPORTING REQUIREMENTS

1. The permittee shall prepare an annual system-wide report to be submitted no later than April 15th of the year following the calendar year covered by the report. The annual report shall include at a minimum:

   a. An overall evaluation of the stormwater quality management program developments and progress including: major findings such as water-quality improvements or degradation, major accomplishments, overall program strengths/weaknesses; and future direction of the program. The permittee shall state an overall assessment of the effectiveness of the SWQMP taking into account water quality/watershed improvements;

   b. An explanation of how the permittee evaluated the effectiveness of each of the program elements;

   c. The status of the implementation and proposed changes to the stormwater quality management program including assessment of controls and specific improvements or degradation to water quality;

   d. A summary of inspections and enforcement actions for regulatory programs;

   e. The implementation status of the public education programs;

   f. Any improvements in water quality due to watershed activities.

   g. The Annual Report shall be submitted to:

      Kentucky Division of Water
      Surface Water Permits Branch
      200 Fair Oaks Lane, 4th Floor
      Frankfort, Kentucky 40601

2. Records accumulated pursuant to this general permit shall be retained for no fewer than three years following the termination of this general permit.

B. CERTIFICATION

All applications or reports submitted to the Division of Water (DOW) shall be signed and certified pursuant to 401 KAR 5:060. Each report shall contain the following completed declaration:

> "I certify under penalty of law that this document and all attachments were prepared under my direction or supervision in accordance with a system designed to assure that qualified personnel properly gather and evaluate the information submitted. Based on my inquiry of the person or persons who manage the system, or those persons directly responsible for gathering the information, the information submitted is, to the best of my knowledge and belief, true, accurate, and complete. I am aware that there are significant penalties for submitting false information, including the possibility of fine and imprisonment for knowing violations.
>
> Executed on the day of__, month, year.
> (Signature)(Title)"

C. REOPENER CLAUSE

This permit shall be modified, or alternatively revoked and reissued, to comply with any applicable effluent standard or limitation issued or approved under 401 KAR 5:050 through 5:085, if the effluent standard or limitation so issued or approved:

1. Contains different conditions or is otherwise more stringent than any effluent limitation in the permit; or

2. Controls any pollutant not limited in the permit.

The permit as modified or reissued under this paragraph shall also contain any other requirements of KRS Chapter 224 when applicable.

PART IV. STANDARD CONDITIONS FOR KPDES PERMIT

The permittee is also advised that applicable KPDES permit conditions in KPDES regulation 401 KAR 5:065, Section 1, will apply to all discharges authorized by this permit.

This permit has been issued under the provisions of KRS Chapter 224 and regulations promulgated pursuant thereto. Issuance of this permit does not relieve the permittee from the responsibility of obtaining any other permits or licenses required by this Cabinet and other state, federal, and local agencies.

Appendix A

KPDES FORM NOI-SW/SMS4

Kentucky Pollutant Discharge Elimination System (KPDES)
Notice of Intent (NOI)
for Stormwater Discharges from Small Municipal Separate Storm Sewer Systems (sMS4) KPDES General Permit

Submission of this Notice of Intent constitutes notice that the party identified in Section I of this form intends to be authorized by a KPDES permit issued for stormwater discharges from a small municipal separate storm sewer system (sMS4). Becoming a permittee obligates such discharger to comply with the terms and conditions of the permit.

ALL NECESSARY INFORMATION MUST BE PROVIDED ON THIS FORM (See Attached Instructions)

I. Permittee Information (attach co-permittee information to this application, if applicable)

Name:		**Contact Person:**	
Address: (If PO Box, include street address)		**Phone:**	
City, State, Zip Code:			

II. Storm Sewer Map

Submit a storm sewer system map indicating the location of all major storm sewer outfalls and names and locations of the receiving streams, and delineation of watershed drainage areas.

III. Minimum Controls:

Submit a report of the best management practices already implemented or scheduled to be implemented to meet the minimum control measures, including any measurable goals to aid in the development and implementation of the controls (an MS4's existing SWQMP and/or annual report may be submitted to satisfy this requirement). Indicate by marking the appropriate box whether you or another entity is responsible for the respective control measure. If another entity, indicate the name of the responsible party next to the appropriate box.

Are you responsible for the control measure?

If no, indicate the responsible party.

A. Public Education and Outreach	**Yes** ☐ **No** ☐	
B. Public Involvement and Participation	**Yes** ☐ **No** ☐	
C. Illicit Discharge Detection and Elimination	**Yes** ☐ **No** ☐	
D. Construction Site Runoff Control	**Yes** ☐ **No** ☐	
E. Post Construction Management for Development and Re-Development	**Yes** ☐ **No** ☐	
F. Pollution Prevention and Good Housekeeping for Municipal Operations	**Yes** ☐ **No** ☐	

IV. Certification: I certify under penalty of law that this document and all attachments were prepared under my direction or supervision in accordance with a system designed to assure that qualified personnel properly gather and evaluate the information submitted. Based on my inquiry of the person or persons who manage the system, or those persons directly responsible for gathering the information, the information submitted is, to the best of my knowledge and belief, true, accurate, and complete. I am aware that there are significant penalties for submitting false information, including the possibility of fine and imprisonment for knowing violations.			
Printed or Typed Name:			
Signature:		**Date:**	

Kentucky Pollutant Discharge Elimination System (KPDES)
Instructions
Notice of Intent (NOI) for Stormwater Discharges Associated with Small Municipal Separate Storm Sewer Systems (SMS4)To Be Covered Under the KPDES General Permit

WHO MUST FILE A NOTICE OF INTENT (NOI) FORM
The operator of a small municipal separate storm sewer system (SMS4) in accordance with 40 CFR Parts 9, 122, 123, and 124 and 401 KAR 5:060, must submit a NOI to obtain coverage under the SMS4 KPDES Stormwater General Permit. If you have questions about whether you need a permit under the small (SMS4) KPDES Stormwater Program, call **Abigail Rains, Wet Weather Section, Kentucky Division of Water at (502) 564-3410, extension 4891.**

WHERE TO FILE NOI FORM
NOIs must be sent to the following address:

Section Supervisor
Permit Support Section
Surface Water Permit Branch, Division of Water
Frankfort Office Park
200 Fair Oaks Lane, 4th Floor
Frankfort, KY 40601

COMPLETING THE FORM
Type or print legibly in the appropriate areas only. If you have any questions regarding the completion of this form call **Abigail Rains, Wet Weather Section, at (502) 564-3410, extension 4891.**

SECTION I - Permittee Information
Give the legal name of the person, firm, public organization, or entity legally designated as the Permittee responsible for maintaining compliance with the approved Stormwater Phase II MS4 permit. Enter the complete address and phone number of the operator of the MS4 system(s) and co-permittees bound by the Stormwater Phase II MS4 permit as a part of this NOI. **Attach a list of co-permittees if applicable. Also, include co-permittee list and legally binding MOU's in the Stormwater Management Plan (SWMP).**

SECTION II - Storm Sewer Map
Include a detailed map of the storm sewer system indicating all stormwater outfalls to the waters of the Commonwealth and delineating the separate watershed drainage areas.

SECTION III - Minimum Control Measures
Include the current status of the listed control measures. If another entity is responsible for a particular control measure, indicate the entity as appropriate.

SECTION IV - CERTIFICATION
Federal statutes provide for severe penalties for submitting false information on this application form. Federal regulations require this application to be signed as follows:

For a municipality, state, Federal, or other public facility: by either a principal executive officer or ranking elected official.

STEVEN L. BESHEAR
GOVERNOR

ENERGY AND ENVIRONMENT CABINET
DEPARTMENT FOR ENVIRONMENTAL PROTECTION
DIVISION OF WATER
200 FAIR OAKS LANE
FRANKFORT, KENTUCKY 40601-1190
www.kentucky.gov

GOVERNOR
SECRETARY

March 1, 2010

Re: Phase II MS4 General Permit
KPDES No.: KYG200000
AI No.: 35050
Kentucky

Dear Commenter:

Your comments concerning the above-referenced draft permit have been reviewed and responses prepared in accordance with Kentucky Pollutant Discharge Elimination System (KPDES) regulation 401 KAR 5:075, Section 12. The comments have been categorized and briefly described below and our responses to those comments follow:

Comment 1: A commenter disagrees with the Division's assertion in the Fact Sheet 9. Antidegradation that "the application of the Maximum Extent Practicable (MEP) standard set forth in this general permit and protections afforded by other permits….will not result in water quality being lowered to a level that would interfere with existing or designated uses in accordance with 401 KAR 10:030. This MS4 general permit provides that any impacts may be addressed via alternatives employed by Minimum Control Measure #5 for post-construction stormwater runoff."

Response 1: The requirements of the general permit for small MS4s reflect the division's interpretation of what constitutes MEP. In that regard this general permit reflects changes in the division's interpretation of MEP, including the addition of standards for discharges from stormwater construction sites, and new development or redevelopment on a post-construction basis, such as through ordinances implemented by permitted MS4 programs to limit peak discharges. This general permit includes new requirements that mandate the permittee: 1) incorporate into ordinance or other regulatory mechanism stormwater construction standards that, at a minimum, are as protective as Kentucky's General Permit for Stormwater Construction sites, and 2) develop a locally derived water-quality treatment standard that requires new development projects to implement controls to manage runoff through water-quality control structures. The standard shall be based, at a minimum, on an analysis of precipitation records to determine the equivalent surface depth of runoff (e.g. 0.75 inches) produced from an 80th percentile precipitation event. These new requirements of the MS4 permit will reflect the Division of Water's interpretation of MEP and an improvement in control standards for runoff from small MS4s. In light of these improved MEP control standards the division believes that discharges from small MS4s that are in compliance with this permit will protect water quality from degradation, and may improve water quality to receiving streams.

Comment 2: A commenter believes that any permittee approved for coverage under KYG200000 should be required to admit their design will lower water quality in high quality and exceptional waters and be required to perform a full antidegradation analysis including a socioeconomic demonstration and alternatives analysis. Without the completion of an antidegradation review the permittee should be required at a minimum to implement a menu of Low Impact Design (LID) Best Management Practices and to use developed estimates of how the LID measures will reduce runoff, and subsequently degradation with a stated goal of retaining 85-90% of pre-development runoff conditions on each site.

Response 2: The new requirements of the MS4 general permit reflect the Division of Water's interpretation of MEP and an improvement in control standards for runoff from small MS4s. In light of these improved MEP control standards, the division believes that discharges from small MS4s that are in compliance with this permit will protect water quality from degradation, and may improve water quality to receiving streams.

Comment 3: A commenter noted the permit must ensure that new or increased discharges to impaired waters will satisfy antidegradation provisions. Any new discharges or new outfalls constructed or created by the permittee after the authorization date of this permit would be considered under the jurisdiction of the MS4 permit. Therefore, the permit should require the permittee to notify KDOW a minimum of thirty (30) days prior to commencement of a new discharge or increased discharge from the MS4, and include a description of the discharge together with information demonstrating that the discharge will satisfy the antidegradation provisions of the state water quality standards. In addition, prior to commencing any new or increased discharge, the permittee should be required at a minimum to implement a menu of Low Impact Design (LID) Best Management Practices and to use developed estimates of how the LID measures will reduce runoff, and subsequently degradation with a stated goal of retaining 85-90% of pre-development runoff conditions on each site to ensure compliance with antidegradation provisions and the terms of the permit or admit the proposed design will lower water quality in high quality and exceptional waters and be required to perform a full antidegradation analysis including a socioeconomic demonstration and alternatives analysis.

Response 3: Discharges from small MS4s are subject to maximum extent practicable (MEP) control standards. The requirements of the general permit for small MS4s reflect the division's interpretation of what constitutes MEP. In that regard this general permit reflects changes in the division's interpretation of MEP, including the addition of standards for discharges from stormwater construction sites, and new development or redevelopment on a post-construction basis, such as through ordinances implemented by permitted MS4 programs to limit peak discharges. This general permit includes new requirements that mandate the permittee: 1) incorporate into ordinance or other regulatory mechanism stormwater construction standards that, at a minimum, are as protective as Kentucky's General Permit for Stormwater Construction sites, and 2) develop a locally derived water-quality treatment standard that requires new development projects to implement controls to manage runoff through water-quality control structures. The standard shall be based, at a minimum, on an analysis of precipitation records to determine the equivalent surface depth of runoff (e.g. 0.75 inches) produced from an 80th percentile precipitation event on the site. These new requirements of the MS4 permit reflect the Division of Water's interpretation of MEP and an improvement in control standards for runoff

from small MS4s. In light of these improved MEP control standards the division believes that discharges from small MS4s that are in compliance with this permit will protect water quality from degradation, and may improve water quality to receiving streams.

Comment 4: A commenter noted the statements in the Fact Sheet should be consistent in presenting KDOW's conclusion as to how the permit complies with requirements for high quality waters: Is it: (1) significant lowering of water quality will be prevented, or (2) permanent lowering of water quality will not occur? If KDOW believes those two conclusions to be the same, the Fact Sheet should say that as well.

Response 4: The new requirements of the MS4 general permit reflect the Division of Water's view of MEP and an improvement in control standards for runoff from small MS4s. In light of these improved MEP control standards, the division believes that discharges from small MS4s that are in compliance with this permit will protect water quality from degradation, and may improve water quality to receiving streams.

Comment 5: A commenter noted if compliance with high quality waters requirements is based on prevention of "significant" lowering of water quality, KDOW should provide additional explanation as to how the permit complies with a requirement(s) of KAR 10:030, in relation to high quality waters, since the terms "significant lowering of the water quality," or "significant degradation" are not terms that are used in the regulation.

Response 5: The division has amended the fact sheet and removed references to "significant lowering of the water quality," and "significant degradation." This general permit includes new requirements that mandate the permittee: 1) incorporate into ordinance or other regulatory mechanism stormwater construction standards that, at a minimum, are as protective as Kentucky's General Permit for Stormwater Construction sites, and 2) develop a locally derived water-quality treatment standard that, at a minimum, requires new development projects to implement controls to manage runoff produced from an 80th percentile precipitation event through water-quality control structures.. These new requirements of the MS4 permit reflect the Division of Water's interpretation of MEP and an improvement in control standards for runoff from small MS4s. The division believes that discharges from small MS4s that are in compliance with this general permit will protect water quality from degradation, and may improve water quality to receiving streams.

Comment 6: A commenter noted that this draft permit contains the same language in the purpose section as the language that EPA specifically asked the State to clarify in Kentucky's draft Fact Sheet for the KYR10 general permit for construction stormwater (i.e., "The process for making a determination of whether water quality will be lowered in these waters to a level that would interfere with existing or designated uses is what is commonly known as 'Tier 2 review'"). KDOW did not make the changes that EPA requested to that Fact Sheet and did not provide an explanation of KDOW's position on this statement in relation to the revised antidegradation methodology adopted in the triennial review. Is it KDOW's opinion that a demonstration of socioeconomic necessity and importance allows lowering of water quality to the criteria levels established for applicable uses for the receiving waters? We ask that KDOW clarify the State's position on this issue in writing- as a revision to the statement in the Fact Sheet for this draft general permit, and in writing to EPA as a part of the submittal of the new and revised standards adopted during the triennial review.

Response 6: The agency has been removed the language from the Fact Sheet.

Comment 7: A commenter noted the Fact Sheet states that an individual permit will be required "where implementations of the technology-based requirements in this permit will be sufficient to protect the applicable water quality standards for receiving water…" We request you include additional information in the fact sheet that would clarify: who will make that decision, what decision criteria/factors will be used, and at what point(s) in the permit issuance process will this decision be made.

Response 7: The agency has been removed the language from the Fact Sheet.

Comment 8: A commenter noted that the permit must ensure that new or increased discharges to impaired waters will satisfy antidegradation provisions. Any new discharges or new outfalls constructed or created by the permittee after the authorization date of this permit would be considered under the jurisdiction of the MS4 permit. Therefore, the permit should require the permittee to notify KDOW a minimum of thirty (30) days prior to commencement of a new discharge or increased discharge from the MS4, and include a description of the discharge together with information demonstrating that the discharge will satisfy the antidegradation provisions of the state water quality standards. In addition, prior to commencing any new or increased discharge, the permittee should be required at a minimum to implement a menu of Low Impact Design (LID) Best Management Practices and to use developed estimates of how the LID measures will reduce runoff, and subsequently degradation with a stated goal of retaining 85-90% of pre-development runoff conditions on each site to ensure compliance with antidegradation provisions and the terms of the permit or admit the proposed design will lower water quality in high quality and exceptional waters and be required to perform a full antidegradation analysis including a socioeconomic demonstration and alternatives analysis.

Response 8: Discharges from small MS4s are subject to maximum extent practicable (MEP) control standards. The requirements of the general permit for small MS4s reflect the division's interpretation of what constitutes MEP. In that regard this general permit reflects changes in the division's interpretation of MEP, including the addition of standards for discharges from stormwater construction sites, and new development or redevelopment on a post-construction basis, such as through ordinances implemented by permitted MS4 programs to limit peak discharges. This general permit includes new requirements that mandate the permittee: 1) incorporate into ordinance or other regulatory mechanism stormwater construction standards that, at a minimum, are as protective as Kentucky's General Permit for Stormwater Construction sites, and 2) develop a locally derived water-quality treatment standard that requires new development projects to implement controls to manage runoff through water-quality control structures. The standard shall be based, at a minimum, on an analysis of precipitation records to determine the equivalent surface depth of runoff (e.g. 0.75 inches) produced from an 80th percentile precipitation event. These new requirements of the MS4 permit reflect the Division of Water's interpretation of MEP and an improvement in control standards for runoff from small MS4s. In light of these improved MEP control standards the division believes that discharges from small MS4s that are in compliance with this permit will protect water quality from degradation, and may improve water quality to receiving streams.

The Division of Water believes that the controls within the permit general permit are consistent with the implementation procedures identified in 401 KAR 10:030 for this category of discharge, and satisfy applicable antidegradation requirements. The division believes the conditions of 401 KAR 10:030 have been satisfied by this permit action. The process described above for new or expanded discharges of stormwater runoff associated with this MS4 general permit are consistent with the requirements of 401 KAR 10:029, Section 1, 401 KAR 10:030, Section 1 and the ruling of the Sixth Circuit Court.

Comment 9: A commenter noted that the Fact Sheet at Page 5 states that MS4s must provide a map of "all" MS4 outfalls. That is inconsistent with the text of the permit, which limits mapping requirements under the illicit program to "major" MS4 outfalls. Please clarify that all outfalls need not to be included on the map.

Response 9: The word "major" has been added to the Fact Sheet at Page 5.

Comment 10: A commenter noted the Fact Sheet indicates that Administrative Record includes a "permit application." Since there is no "application" at issue, and that reference should be deleted from the Fact Sheet. The administrative record should, however, include KDOW's guidance document entitled "Phase II Stormwater Quality Management Plan Preparation Guidance", which is referenced in each of the six minimum program requirements with respect to recordkeeping requirements if that guidance document is to be used. As set forth below, the Guidance document does not appear to address reporting and recordkeeping provisions for which it was cited.

Response 10: The reference to an application has been deleted from the Fact Sheet, and the reference to the "Phase II Stormwater Quality Management Plan Preparation Guidance" has been deleted from the permit language as well.

Comment 11: A commenter noted that the Fact Sheet on Page 6 notes that a requirement for post-construction stormwater runoff control program is to maximize groundwater recharge and that the permittee is "required" to assess maximizing groundwater recharge. That requirement is not referenced in the permit itself. The Clean Water Act does not require municipalities to maximize groundwater recharge, and the statement should be stricken from the Fact Sheet.

Response 11: The term "required" has been removed from the Fact Sheet. The Fact Sheet now reads "Natural Infiltration is an appropriate BMP that can maximize groundwater recharge which will reduce stormwater quality and quantity impacts on receiving streams".

Comment 12: Under Part I (Applicability), Section C. (Co-Permittees), the applicability of paragraph 2.c. is not clear. That provision provides that each co-permittee is individually responsible for …"any permit conditions that are established for specific areas of the MS4." A commenter suggested the phrase "owned or operated by that co-permittee" should be added at the end of paragraph 2.c. to make clear that other co-permittees that do not own or operate a portion of the MS4 are not responsible for such specific permit conditions.

Response 12: The phrase "owned or operated by that co-permittee" has been added at the end of paragraph 2.c. to clarify that other co-permittees that do not own or operate a portion of the MS4 are not responsible for specific permit conditions outside of their jurisdiction.

Comment 13: Under Part I, Section D., relating to "Obtaining Authorization", a commenter suggested that either the Fact Sheet or the permit should provide an option to small MS4s to apply for and obtain an individual permit in lieu of the general permit. For example, Section D.2. provides that all operators of small MS4s that are currently regulated must submit a Notice of Intent to be covered by the general permit. An NOI should not be required if an individual permit is pursued. Existing systems should have an opportunity to apply for an individual permit in lieu of submitting a Notice of Intent for the general permit.

Response 13: The option for applying for and obtaining an individual permit in lieu of the general permit has been added to the permit.

Comment 14: A commenter suggested that under the definition part of the permit that KDOW add the definition "Stormwater discharge associated with small construction activity" as stated in 40 CFR 122.26 (15) (i). This definition defines the targeted construction sites in MCM4. It is also noted in this definition that "small construction activity also includes the disturbance of less than one acre of total land area that is part of a larger common plan of development or sale if the larger common plan will ultimately disturb equal to or greater than one and less than five acres."

Response 14: The definition for "stormwater discharge associated with small construction activity" is not necessary. The division does not distinguish between small and large stormwater construction sites, and this permit requires construction site operators to implement appropriate erosion and sediment control best management practices (BMPs) that, at a minimum, shall be as protective as Kentucky's General Permit for Stormwater Construction sites (KYR100000).

Comment 15: A commenter has noted that a definition was not provided for "priority pollutants" and asks if it correct to assume that "priority pollutants" are those that are causing stream impairments based upon the impaired streams list and approved TMDLs and caused by urban land use.

Response 15: The word "priority" has been removed from the permit. While, it was a correct assumption by the commenter, the word "priority" has been removed to clarify the statement.

Comment 16: "Outfall" means a "point source" at the point where a municipal separate storm sewer discharges to Waters of the United States, but does not include open conveyances connecting two (2) municipal separate storm sewers, or pipes, tunnels, or other conveyances which connect segments of the same stream or other Waters of the Commonwealth and are used to convey waters of the United States. A commenter asks if this means that the discharge points of storm drains (regardless of size) that connect into a subsurface conveyance carrying a stream are not outfalls?

Response 16: Connections to subsurface drainage, such as Class V injection wells, sinkholes, drywells, karst windows, sinking streams, or other karst features are regulated by the Safe Drinking Water Act (Underground Injection Control program). This program is directly implemented in the

Commonwealth of Kentucky by the U.S. Environmental Protection Agency, Region IV. As such, these conveyances are not considered outfalls under the Kentucky Municipal Separate Storm Sewer Program.

Comment 17: A commenter feels the SWQMP must be a permit condition of the final permit. The Clean Water Act standard for MS4s is that the permit must include conditions to reduce the discharge of pollutants to the Maximum Extent Practicable (MEP) in order to protect water quality. Typically, narrative effluent limits, including source reduction and pollution prevention, are included in a stormwater plan. Unfortunately, the draft permit states in the Stormwater Management Program Review and Modification section that:

1. The permittee shall annually evaluate the effectiveness of the stormwater program and BMP's implemented to comply with this general permit. (Draft Permit, p.II-10)

2. The permittee *may* modify the stormwater quality management plan (SQWMP) during the life of the permit…(emphasis added, Draft Permit, p.II-10)

3. The content and provisions of the SWQMP, as discussed Part II, are *not* considered permit conditions. The SWQMP is an implementation plan to be utilized as a tool by the permittee to facilitate compliance with the six program elements outlined in this permit (emphasis added, Draft Permit, p. II-11).

In effect, then, under the terms of the draft permit, the permittee is not obligated to review the SWQMP, modify ineffective BMPs, modify the schedule of requirements in the SWQMP, or implement the SWQMP on new areas added to the MS4. As you are aware, operators of MS4s are obligated to develop and implement stormwater management plans that reduce the discharge of pollutants to the maximum extent practicable (MEP). According to EPA, the standard of MEP should adapt to both effectiveness and changing conditions (see http://cfpub.epa.gov/npdes/stormwater/measurablegoals/part1.cfm). If the permittee is not obligated to continuously review and modify the SWQMP, the standard of MEP, by definition, will not be met. The final permit must be amended to require the permittee to update and modify the SWQMP as needed to ensure improvement in water quality. The SWQMP is itself an effluent limit contained in the KPDES permit.

Response 17: The SWQMP is a dynamic document that must be updated to address ineffective BMPs and other necessary changes (i.e., responsible parties, or frequencies) and is a plan to implement the requirements of the permit and not subject to permit requirements. The division disagrees with the comment that the permittee is not obligated to review the SWQMP, modify ineffective BMPs, modify the schedule of requirements in the SWQMP, or implement the SWQMP on new areas added to the MS4. The permit requires the permittee to evaluate annually the effectiveness of the SWQMP and the BMPs used to implement the plan. Modifications that replace an ineffective or infeasible stormwater control, which is specifically identified in the SWQMP, may be made at any time; however, the changes including the alternative stormwater control that replaced the ineffective one shall be submitted with the Annual Report. Further, any changes made to the SWQMP must be submitted in the following Annual Report.

Comment 18: A commenter noted that the definition of "Stormwater Quality Management Program" or "SWQMP" is defined as the overall stormwater program, which is different from (and broader than) the "Stormwater Quality Management Plan". The Stormwater Quality Management Plan is the written document that details the "SWQMP." It appears that the Division has used the term in the SWQMP in the permit in various places where it really referring to the Stormwater Quality Management Plan document and not the entire program.

Response 18: Statements have been added to the permit that clarifies the distinction of the Stormwater Quality Management Program and the SWQMP.

Comment 19: A commenter noted that under Part I, Section D.2., of the permit relating to the submittal of revised SWQMPs, should be clarified that revised SWQMPs may include compliance schedules where necessary or appropriate to come into compliance with newly established provisions of the general permit. It is critical for municipalities to have ample time to create, review, and obtain public input on new program elements. Some new program elements may take longer than 180 days. Indeed 24 months is provided for legal authorities under Part II. Section A. Compliance schedule opportunities should be addressed in the response to comments.

Response 19: Part I, Section D.3., relates to the submittal of revised SWQMPs. The suggested compliance schedule language has been added to this section of the permit.

Comment 20: A commenter noted that under Part I, Section E. (Definitions), the SWQMP is referenced as being the "Stormwater Quality Management Program." As discussed above, in other sections of the permit, as well as in the Kentucky SWQMP Guidance, the SWQMP is referred to as the Stormwater Quality Management Plan. It is suggested that the acronym SWQMP, be used for referring to the "Stormwater Quality Management Plan."

Response 20: The acronym "SWQMP" refers solely to the written "Stormwater Quality Management Plan". The permit has been revised to clarify this issue.

Comment 21: A commenter noted that under Part II, Section B., relating to the Stormwater Quality Management Program, the "Phase II Stormwater Quality Management Plan Preparation Guidance" is adopted with regard to recordkeeping and annual reporting provisions within each of the six program elements. However, that guidance document does not address recordkeeping or annual reporting. In adopting guidance documents as permit requirements, the version of the guidance document currently in effect at the time of the public comment period may be incorporated by reference into the permit with respect to specific requirements and conditions. However, subsequent amendments to the guidance document cannot modify the permit requirements since any such requirements will not have been subject to public notice and comment as "permit conditions". It is therefore suggested that each of these paragraphs referencing the Guidance document be stricken and replaced with a provision that provides "the permittee shall track and maintain respect to this program element as necessary to document compliance with permit requirements and prepare the annual system-wide report pursuant to Part III.A. of the permit."

Response 21: Reference to the "Phase II Stormwater Quality Management Plan Preparation Guidance" has been removed from the permit, and revised language has been included in the permit.

Comment 22: A commenter noted that under Part II. Stormwater Quality Management Program 1st paragraph Part II, Page II-1, the draft permit states "The requirements of this general permit represent Maximum Extent Practicable (MEP)." The term Maximum Extent Practicable is an undefined term and the EPA has not provided a precise definition of MEP to allow for maximum flexibility in MS4 permitting. This permit adds extra requirements that go above and beyond state requirements in 401 KAR 5:060. These extra requirements limit the MS4 community's flexibility to pick Best Management Practices (BMPs) and place an unjustified financial burden on the MS4 communities. Many provisions of the draft permit are written more as specific enforcement compliance remedies rather than as permit terms that provide the permittee with flexibility in shaping its program elements. It appears that local flexibility is not accommodated by this permit.

Response 22: This general permit requires the permittee to develop a stormwater quality management program that is designed to reduce the discharge of pollutants to the **maximum extent practicable** (MEP). The MEP standard involves applying best management practices that are effective in reducing the discharge of pollutants in stormwater runoff. This requires that the permittee use known, available, and reasonable methods of prevention and control of stormwater discharges. The permit was drafted with the intent to give more specific direction than the previous permit while providing local flexibility. The local flexibility was assured by using the term "effective equivalent". The term "effective equivalent" allows the permittee to use BMPs that are tailored for their communities.

Comment 23: A commenter noted that the many provisions of the permit are written as specific enforcement compliance remedies rather than as permit terms that provide the permittee with flexibility in shaping its program elements. These include mandates on design standards, government organization, and procedures, and timeframes for taking action on enforcement concerns. Former Assistant Administrator for U.S. EPA's Office of Water, Benjamin Grumbles, in a May 22, 2007, letter to the General Accounting Office advised that the MS4 regulations provide for inherent local flexibility to implement locally-derived solutions. It appears that local flexibility is not accommodated by this draft permit. To further expand on the subject, under Part II B. Stormwater Quality Management Program Page II-2 1.Public Education and Outreach b. "the permittee shall utilize as guidance the Stormwater Educational Toolkit developed by the Kentucky Transportation Cabinet with support from the Division of Water, EPA's Non-Point Source Toolbox found at http://www.epa.gov/nps/toolbox/, or substitute alternate outreach materials that provide an effective equivalent." This wording should be changed to read "may utilize." Under 40 CFR 122.34 (b) (1) (ii) Guidance: "You may use stormwater educational materials provided by your State, Tribe, EPA, environmental, public interest or trade organizations or other MS4s…" The MS4s should have the flexibility to utilize any and all materials that meet the intent of the regulation. Requirements to utilize specific guidance materials should not be included in the permit.

This also is a guidance tool listed under the *Kentucky Division of Water Phase II Stormwater Quality Management Plan Preparation Guidance* prepared April 2008, PG 6. Under 40 CFR 122.30 (a) "Sections 122.30

through 122.37 are written in a 'readable regulation' format that includes both rule requirements and EPA guidance that is not legally binding." This permit requirement is attempting to make EPA guidance legally binding.

Response 23: By including the words "provide an effective equivalent" the permit is giving the MS4 communities the flexibility to utilize any and all materials that meet the intent of the regulation.

Comment 24: A commenter noted that Part II B. 1. c. of the permit states: "The permittee shall prioritize public education efforts to focus on priority pollutants impairing or threatening the local waterways." This should not be in the permit or should be reworded as "may prioritize" instead of "shall prioritize". This requirement limits the flexibility of the small MS4 community by making this BMP too specific to Minimum Control Measure (MCM) 1 requirements.

Response 24: The term "priority pollutants" has been changed to pollutants. The purpose of the MS4 program is to reduce pollutants from stormwater runoff or snow melt into the receiving waterbodies. Prioritizing the efforts of the permittee to address the pollutant that is in their local waterway is the intent of this statement and the Division disagrees that it limits flexibility of the MS4 community.

Comment 25: A commenter noted that Part II B. 1. d. states: "The permittee shall demonstrate that the education and outreach efforts are targeted to the appropriate audiences and balanced between policy-makers, local citizens, and other stakeholders." This should not be in the permit because under 40 CFR 122.34 (b) (1) (ii) Guidance:"…EPA recommends that the public education program be tailored, using a mix of locally appropriate strategies, to target specific audiences and communities…"

This permit requirement is of the same context as EPA guidance and should not be in the permit due to under 40 CFR 122.30 (a) "Sections 122.30 through 122.37 are written in a 'readable regulation' format that includes both rule requirements and EPA guidance that is not legally binding." This is also a guidance tool listed under the *Kentucky Division of Water Phase II Stormwater Quality Management Plan Preparation Guidance* prepared April 2008, pg 6. This document was used as educational material guidance for MS4s to prepare the 2008-2013 SWQMP. Therefore, this item of the permit is attempting to make state stormwater material guidance and EPA guidance legally binding.

Response 25: The federal regulations and the identified six minimum control measures in the regulations are very generally stated and it is expected and appropriate for permitting authorities to add specificity through more detailed and measureable requirements, to make performance expectations clearer and make the permits enforceable, as well as ensure that the obligation to reduce pollution to the maximum extent practicable is reflected in the permit. These provisions are consistent with and implement the federal regulatory requirements; as such these provisions do not go beyond federal regulatory requirements.

Comment 26: A commenter noted that under Part II B. 1. e. the permit states: "The permittee shall measure the understanding and adoption of the targeted behaviors among targeted audiences. The resulting measurements shall be used to direct education and outreach resources more effectively, as well as to evaluate changes in adoption of water quality-benefitting behaviors." This should not be a permit requirement but rather a BMP

that a MS4 community may choose. Under 401 KAR 5:060 (9) (b) (1) and 40 CFR 122.34 (b) (1) you must "Implement a public education program to distribute educational materials to the community or conduct equivalent outreach activities about the impacts of stormwater discharges on water bodies and that steps that the public can take to reduce pollutants in stormwater runoff." The federal and state regulations both say implement a public education program to distribute educational materials to the community but it does not say how to implement the program. This item can be listed as an item on a BMP menu, but the small MS4 community should be provided with the flexibility to use this BMP or not implement it. It is the small MS4 community's responsibility to evaluate the effectiveness of their program and adjust BMP's accordingly. The small MS4 community should be allowed flexibility in evaluating its public education and outreach program.

Response 26: The permit has been revised to "The permittee shall measure the targeted audience understanding of their impacts on water quality and the adoption of the behavior changes resulting from the permittee's public education and outreach efforts. The resulting measurements shall be used to direct education and outreach resources more effectively." This statement does not limit the permittee, rather, directs the permittee on how to use the information gathered to address the local target audiences and their behaviors to reduce pollutants in stormwater runoff and to achieve the overall goal of improving water quality.

Comment 27: A commenter noted that with respect to public involvement/participation under Part II Section B.2.c. of the permit, current MS4 programs should be provided at least 60 to 90 days from the effective date of the permit to develop and implement any revised advertising procedures. The proposed thirty days may be too short of a period to both develop and implement such new procedures, especially where city council authorization may be necessary. Also, please confirm that this provision only requires development of the general notification procedures to be used when providing notice of subsequently proposed matters, and does not require that actual notice be given of all program requirements at this time.

Response 27: The permit now contains the suggested sixty (60) days from the effective date of the permit for current MS4 programs to develop and implement any revised advertising procedures.

Comment 28: A commenter noted that Part II B.2.c. of the permit, states: "The permittee shall develop and implement a method of advertising the public involvement opportunities listed above in 2b..." This should not be in the permit as a requirement but rather an item listed in a menu of BMPs for the small MS4 community to select. This permit requirement goes above and beyond what is required by state and federal regulations.

Response 28: The permit also includes alternate methods that provide an effective equivalent which allows the permittee the needed flexibility to comply with the permit.

Comment 29: A commenter noted with respect to Part II, Section B.3. of the permit, relating to illicit discharge detection and elimination, subparagraph e. relating to mapping provides for the location of all known major outfalls to be identified in the annual report for "year two" of the permit.

Since reporting under Part III.A. appears to be required on a calendar year basis, KDOW should confirm that "year two" of the permit would be 2010, assuming that the general permit is issued in 2009. This would provide the permittees until April 15, 2012, to complete the mapping of major outfalls.

Response 29: The permit has been issued in March 2010. Therefore, the 2010 is year one; 2011 is year two, and the annual report is due during the annual report after year two, therefore, mapping must be completed by April 15, 2012.

Comment 30: A commenter noted with respect to the sanitary sewer line exfiltration provisions under the IDDE program requirements (Page II-5), a concern exists that this provision could be construed too broadly given that sanitary sewer lines are not impervious. Accordingly, this Section should be deleted since any unauthorized source of an illicit discharge must already be addressed as part of the IDDE program, making this section redundant. Alternatively, sanitary sewer line exfiltration should be defined as leakage from sanitary sewer lines caused by defects or breaks in the system and does not include the *de minimis* losses from sewer lines designed and operated consistent with generally accepted engineering practices, such as those in Ten States' Standard.

Response 30: The permit has been revised to clarify the intent of the provision. Although, sanitary sewer discharge is an illicit discharge, the mitigation process is different than a spill or an improper disposal of other pollutants (e.g. oils or paint). Therefore, the division has included a specific method of addressing the discharges from sanitary sewer line exfiltration.

Comment 31: A commenter noted that Part II B.3.b.i. of the permit states: "Procedures for locating priority areas likely to have illicit discharges." This requirement should be removed from the permit. This goes above the minimum control requirements. This proposed provision is taken verbatim from 40 CFR 122.34 (b) (3) (iv) Guidance. This is attempting to make EPA guidance legally binding. Thus, it should be removed from the permit or be reworded to where the program "may include."

Response 31: The federal regulations and the identified six minimum control measures in the regulations are very generally stated and it is expected and appropriate for permitting authorities to add specificity through more detailed and measureable requirements, to make performance expectations clearer and make the permits enforceable, as well as ensure that the obligation to reduce pollution to the maximum extent practicable is reflected in the permit. These provisions are consistent with and implement the federal regulatory requirements; as such these provisions do not go beyond federal regulatory requirements.

Comment 32: A commenter noted that Part II B. 3.b.v. of the permit states: "Procedures for tracing the source of an illicit discharge; including visual inspections, and when necessary, collecting and analyzing water samples and other detailed inspection procedures." This provision should be removed from the permit or be reworded to where this requirement is a "may" and not a "shall." This language is taken from the guidance section in 40 CFR 122.34 (b) (3) (iv). This is attempting to make EPA guidance legally binding. Thus going above and beyond the minimum control measures as required by 40 CFR 122.34.

Response 32: The federal regulations and the identified six minimum control measures in the regulations are very generally stated and it is expected and appropriate for permitting authorities to add specificity through more detailed and measureable requirements, to make performance expectations clearer and make the permits enforceable, as well as ensure that the obligation to reduce pollution to the maximum extent practicable is reflected in the permit. These provisions are consistent with and implement the federal regulatory requirements; as such these provisions do not go beyond federal regulatory requirements.

Comment 33: A commenter noted that Part II B, 3.b.vi. of the permit states: "Procedures for removing the source of the discharge;…" should be removed from the permit or be reworded to where this requirement is a "may" and not a "shall". This provision is attempting to make EPA guidance legally binding, thus going above and beyond the minimum control measures required by 40 CFR 122.34.

Response 33: The federal regulations and the identified six minimum control measures in the regulations are very generally stated and it is expected and appropriate for permitting authorities to add specificity through more detailed and measureable requirements, to make performance expectations clearer and make the permits enforceable, as well as ensure that the obligation to reduce pollution to the maximum extent practicable is reflected in the permit. These provisions are consistent with and implement the federal regulatory requirements; as such these provisions do not go beyond federal regulatory requirements.

Comment 34: A commenter noted that Part II B. 3. f. of the permit states: "The permittee shall conduct dry weather screening of representative outfalls. Screenings shall include…" Requirements for dry-weather screening should be removed from the permit, reworded as an item to select in a BMP menu that is provided to the small MS4 community, or be reworded as the permittee may conduct dry-weather screening. This provision, as proposed, is attempting to make EPA guidance legally binding, thus going above and beyond the minimum control measures as required by 40 CFR 122.34.

Response 34: The federal regulations and the identified six minimum control measures in the regulations are very generally stated and it is expected and appropriate for permitting authorities to add specificity through more detailed and measureable requirements, to make performance expectations clearer and make the permits enforceable, as well as ensure that the obligation to reduce pollution to the maximum extent practicable is reflected in the permit. These provisions are consistent with and implement the federal regulatory requirements; as such these provisions do not go beyond federal regulatory requirements.

Comment 35: A commenter noted that Part II B. 3. j. of the permit states: "The permittee shall adopt and implement procedures for Illicit Discharge program evaluation and assessment should be removed from the permit, be reworded as an item to select in a BMP menu provided to the small MS4 community, or be reworded as the permittee may adopt and implement procedures for Illicit Discharge program evaluation and assessment. This permit requirement is attempting to make EPA guidance legally binding.

Response 35: The federal regulations and the identified six minimum control measures in the regulations are very generally stated and it is expected and appropriate for permitting authorities to add specificity through more detailed and measureable requirements, to make performance expectations

clearer and make the permits enforceable, as well as ensure that the obligation to reduce pollution to the maximum extent practicable is reflected in the permit. These provisions are consistent with and implement the federal regulatory requirements; as such these provisions do not go beyond federal regulatory requirements.

Comment 36: A commenter noted that for Illicit Discharge Detection and Elimination (Part II.B.3.), the addition of more detail would clarify the level of performance necessary to achieve compliance with the terms and provisions of the permit.

3.a. Current MS4 programs are not given a date certain for implementing and enforcing an IDDE Ordinance although newly-designated MS4s are. The commenter recommends clarifying or explicitly stating that current MS4s programs comply with this requirement upon issuance of the permit.

3.e. Existing permittees were required to develop a storm sewer system map showing the location of all outfalls under the conditions of the current permit (Part I.A.3.ii.), and so this information should already be available for reporting purposes. The commenter recommends the permit include a requirement for MS4s covered by the current permit to include this information in the annual report for Year 1 of the proposed permit.

3.f. The commenter recommends the permit include more explicit requirements in identifying milestones or the minimum level of dry-weather screenings. As an example: 20% of the major outfalls per year, with all the outfalls being addressed within the permit term. In addition, the commenter recommends that the permit could require follow-up investigations within a specified timeframe when information resulting from such screenings, inspections, or citizen complaints indicates reason to suspect an illicit discharge.

The commenter also asked the Division to specify that illicit discharge ordinances should include the authority to compel cessation of illicit discharges as soon as possible; and require the submission for approval, and implementation, of a plan and schedule for the elimination of such discharges when it will take longer than ___ (e.g. 10) days.

Response 36: The following responses reference the comments by using the same numbering system:

3.a. The following statement was added to the permit to clarify the permit concerning current MS4 programs requirement to have adopted the IDDE Ordinance. "Current MS4 programs shall implement and enforce this required ordinance or other regulatory mechanism upon issuance of this permit".

3.e. The following statement was added to the permit to clarify the timeframe and the responsibility of the permittee for reporting purposes of the map of major outfalls. "The permittee shall provide the location of all known major outfalls. The outfalls shall be identified in the annual report for Year 2 of the permit; with updates describing any additionally identified major outfalls in each subsequent annual report".

3.f. A statement was added to the permit to allow more explicit requirements by suggesting a recommended level of effort of twenty percent (20%) of the major outfalls per year. All major outfalls shall be addressed within the permit term. This provision gives the permittee guidance without restricting its efforts.

The permit requires the permittee to submit a corrective action plan in the event of an illicit discharge is detected and needs to be eliminated. This corrective action plan shall be approved by the Division of Water. The schedule for elimination of such discharges will be determined at that time.

Comment 37: A commenter noted that for Construction Site Stormwater Runoff Control (Part II.B.4), the addition for more detail would clarify the terms of permit compliance. The requested additional details are noted below.

4.a. It is not clear as to whether or not current MS4s are expected to already have ordinances in place. If this is the case, 24 months could be a long time for an existing MS4 program to implement and enforce such ordinance/other regulatory mechanism. We recommend clarifying or explicitly stating the timelines for current MS4s to comply with this requirement.

4.a. Among other enforcement authorities, the ordinance could also specify that it will include stop-work authority and consider a specific dollar amount penalty per day authority (e.g., a penalty authority of at least $--- per violation per day).

4.b.ii We recommend this provision be revised to include an explicit level of effort requirement, such as a percentage and/or timeframe for inspection (rather than "periodic"). For example: all active sites monthly and all new sites within 2 weeks after initiation of land disturbance, or within __ days of citizen complaints and a requirement to establish a hotline for reporting construction and other stormwater problems, etc.

The commenter recommended specifying that only inspections conducted by appropriately trained staff (trained in construction erosion and sediment, plan reviews, and BMP implementation) will count towards minimum inspection frequency requirements.

4.b.iii. The commenter recommended the inclusion of escalating enforcement remedies in the referenced enforcement strategy.

4.b.iv. The commenter recommended the following change: *A procedure must be developed to…and prioritize ~~identify~~ sites for inspection.*

Response 37: The following responses reference the comments by using the same numbering system:

4.a. The following statement was added to the permit to clarify the permit concerning the requirement that current MS4 programs adopt the Erosion Prevention and Sediment Control Ordinance. "Current MS4 programs shall implement and enforce an ordinance or other regulatory mechanism that addresses stormwater runoff from active construction sites that disturb one acre or more and active construction sites less than one acre in size that

are part of a larger common plan of development or sale, located within the MS4 upon issuance of this permit."

4.a. The ordinance is a local issue, and allowing the permittees to establish their own ordinances is essential to have the flexibility that the MS4 program allows.

4.b.ii. A statement was added to the permit to allow more explicit requirements by suggesting a recommended level of effort for periodic inspections should be all active sites monthly and all new sites within two (2) weeks after initiation of land disturbance.

The permit requires that the permittee provide training to the employees who will be responsible for the inspecting of the construction sites.

4.b.iii. The permit has been revised to include escalating enforcement remedies.

4.b.iv. The permit has been revised to the suggested change by the commenter.

Comment 38: A commenter noted that the Fact Sheet on Page 6 states that all permittees must incorporate procedures for tracking the stage of construction into their local programs. Please provide clarification on the meaning of "stage of construction" and what is required to track construction.

Response 38: The term "stage of construction" could not be found in the Fact Sheet. The permit states the permittees must incorporate "procedures for the tracking of the construction occurring within the MS4, inspections, compliance, and enforcement procedures taken, if any;"

Comment 39: A commenter commended KY DOW on a much improved post-construction section over the current permit, particularly with respect to a clear performance standard regarding capturing rainfall. As you know, prior planning and design for the minimization of pollutants in post-construction stormwater discharges is an effective approach to stormwater quality management. Therefore, with the requirements as proposed, the commenter feels that the MS4 communities will be better able to address stormwater discharge issues in new and redeveloped areas over the long run. The permit's inclusion of green infrastructure considerations also supports this goal.

Response 39: DOW appreciates the commenter's support of the approach taken by the permit in addressing Post-Construction Stormwater Management in New Development and Redevelopment.

Commenter 40: *"The proposed local standard will require in combination or alone management measures that are designed, built and maintained to treat, filter, flocculate, infiltrate, screen, evapotranspire, harvest and reuse stormwater runoff, or otherwise manage the stormwater runoff quality. The permittee shall develop, at a minimum, a locally derived water-quality treatment standard that requires new development projects to implement controls to manage the runoff associated with 80% of the estimated annual rainfall on the site."*

A commenter noted that the majority of residential development in unincorporated Hardin County occurs in areas where municipal sewer is

not available; therefore, on-site septic systems are required which results in a large minimum lot size. Currently, minimum lot size for residential development is 30,000 ft^2 and under the proposed revisions to the Hardin County Zoning Ordinance, the lot size will be increased to 40,000 ft^2. Our current regulations for subdivisions in these areas require stormwater control for quantity, but exempts new residential subdivisions having lots 30,000 ft^2 or larger from quality controls. Given that these subdivisions have large lots, low percent impervious coverage, open swale drainage, and long times of concentration, the water quality needs are minimal and are met onsite in the overland flow and swale systems. Given this information, the commenter requests that residential subdivision with lot sizes of 30,000 ft^2 or greater be exempt from the water-quality requirements.

Response 40: This specific question will be addressed in a letter to Hardin County, not in the permit reissuance document.

Comment 41: The commenter noted that Part II B.5.c. of the permit states: "….Current MS4 programs shall, within 12 months of the effective date of this permit, develop and submit to the Division of Water, an on-site stormwater quality treatment standard for all new and redevelopment projects. The proposed local standard will require…For projects that cannot meet this water-quality treatment standard, the permittee may adopt two alternatives: off-site mitigation and payment-in-lieu." The commenter noted that this section of the Post-Construction Stormwater Management in New Development and Redevelopment should be removed from the permit for the following reasons:

- Is not economically feasible
- Is going to further damage the failing housing market
- Is going to cause a further slow down in industrial and commercial development which is vital to creating jobs.
- Implies that cities should impose a numeric limit which is not the basis of the Phase II rule but rather Maximum Extent Practible (MEP) governs the permit.
- Could be interpreted to imply that homeowners must install stormwater runoff quality treatment when they redevelop or build their own house, thus going beyond the scope of the MS4 covering development and redevelopment sites of over one acre or less than one acre which are part of a larger common plan of development or sale since all new development and redevelopment coverage areas are not defined for this requirement of the permit.
- This goes above regulating stormwater discharge associated with small construction activity as defined by 40 CFR 122.26 (15) (i).

Response 41: The federal regulations and the identified six minimum control measures in the regulations are very generally stated and it is expected and appropriate for permitting authorities to add specificity through more detailed and measureable requirements, to make performance expectations clearer and make the permits enforceable, as well as ensure that the obligation to reduce pollution to the maximum extent practicable is reflected in the permit. These provisions are consistent with and implement the federal regulatory requirements; as such these provisions do not go beyond federal regulatory requirements.

Comment 42: The commenter noted under 40 CFR 122.34(b) (5) Post-Construction Stormwater Management in New Development and Redevelopment, the small MS4 community "must develop, implement, and enforce a program to

address stormwater runoff from new development and redevelopment projects that disturb greater than or equal to one acre, including projects less than one acre that are part of a larger common plan on development or sale, that discharge into your small MS4. Your program must ensure that controls are in place that would prevent or minimize water quality impacts". The above federal regulation is the standard for post-construction. The small MS4 community must address stormwater runoff, but it does not say how to do it thus allowing the MS4 the flexibility to choose how to do it. To control 80% of the estimated annual rainfall on the site should not be suggested or implied in this permit. If a detention requirement is suggested as guidance, it should be based on a design stormwater existing quantitative data exists for a geographical area not to the exact site. A stormwater quality treatment standard is not the objective of this minimum control measure and not even mentioned in 40 CFR 122.34 (b) (5) (iii) Guidance.

Response 42: The federal regulations and the identified six minimum control measures in the regulations are very generally stated and it is expected and appropriate for permitting authorities to add specificity through more detailed and measureable requirements, to make performance expectations clearer and make the permits enforceable, as well as ensure that the obligation to reduce pollution to the maximum extent practicable is reflected in the permit. These provisions are consistent with and implement the federal regulatory requirements; as such these provisions do not go beyond federal regulatory requirements.

Comment 43: The commenter noted Part II B. e. states of the permit: "The permittee shall develop and implement project review, approval, and enforcement procedures for new development and redevelopment projects that disturb greater than one acre, and projects less than one acre that are part of a larger common plan of development or sale…" This requirement should be removed from the permit as well as its additional items. With projects less than one acre that are part of a larger common plan of development or sale this requirement is unattainable, unrealistic, uneconomic and not practical. This provision could be interpreted to require homeowners to submit site plans for home remodeling and minor site work. This requirement of the permit is a paraphrased form of the guidance listed in 40 CFR 122.34 (b) (5) (iii). This permit requirement is attempting to make EPA guidance legally binding.

Response 43: The federal regulations and the identified six minimum control measures in the regulations are very generally stated and it is expected and appropriate for permitting authorities to add specificity through more detailed and measureable requirements, to make performance expectations clearer and make the permits enforceable, as well as ensure that the obligation to reduce pollution to the maximum extent practicable is reflected in the permit. These provisions are consistent with and implement the federal regulatory requirements; as such these provisions do not go beyond federal regulatory requirements.

Comment 44: The commenter noted Part II B. f. of the permit states: "The permittee shall require all new development and redevelopment to establish and enter into long-term maintenance agreement and maintenance plan approved management practices for property owners…" The commenter suggests that Item f should be reworded to say that according to 40 CFR 122.34 (b) (5) (ii) (C) "the MS4 shall ensure adequate long-term operation and maintenance of BMPs."

APPENDIX 9

ESTILL COUNTY SOLID WASTE PERMIT

ADVANCED DISPOSAL SOLID WASTE PERMIT

SPENT LAMP/UNIVERSAL WASTE REQUIREMENTS

Estill County
Where the Bluegrass Kisses the Mountains

Judge Wallace Taylor
Estill County Judge Executive

130 Main Street, Room 101
Irvine, KY 40336

(606) 723-7524
Fax: (606) 723-5471

www.estillky.com

May 7, 2009

To Whom It May Concern:

In order to ensure that you are in compliance with the Estill County Solid Waste Ordinance (Ordinance No. 6, Amendment 3), I have attached the most recent amendment with qualification for a waste hauler permit. This ordinance requires that any person or business engaging in the **collection or transportation** of solid waste shall first obtain a permit issued from the Estill County Fiscal Court.

Please note the following qualifications prior to being issued the permit:

1. "The fee for **collection, transportation or discharge** of solid waste shall be $25 for each vehicle with up to two (2) tons capacity and $50 for each vehicle with capacity over two (2) tons. The required fee must accompany each application.
2. Permits will be valid from the date of issuance until June 30 of the fiscal year in which the permit is granted subject to continued conformance with the regulations governing the collection and transportation of solid waste in the county.
3. At the time of permit expiration, June 30 of the Fiscal Year issued, said person or business must submit to the Fiscal Court a performance report relative to the past year's operations. All reports must be made on the official reporting form that can be obtained at the Office of the Estill County Judge Executive. If operational deficiencies are found via the annual report or by reports of complaints from citizens or public officials, said person or business will be notified and asked to respond in writing or by appearance before Fiscal Court.
4. Any person engaged in the collection and or transport of solid waste must carry liability insurance and furnish proof thereof at time of application for permit.

Therefore, please note that the following qualifications must be met prior to being issued permits per vehicle:

- Please submit the required fee per vehicle as outlined in the above-listed requirements.
- Please complete the enclosed form, providing information for each vehicle.
- Please provide proof of liability insurance.

After receiving the above-listed requirements, I will forward to you permits that must be displayed on each vehicle window, as well as a paper copy to be kept in the vehicle.

If you require additional information, please feel free to contact me at the above-listed number.

Respectfully,

Kim Dawes
Estill Co. SWC

Kentucky
UNBRIDLED SPIRIT

ESTILL COUNTY FISCAL COURT

Division of Solid Waste
Irvine, KY 40336

PHONE: (606) 723-7524

FAX: (606) 723-~~7524~~ 5471

PERMIT APPLICATION

Name in which license is sought: Eastern Kentucky University

Address: Facilities Service 521 Lancaster Ave.

Richmond KY 40475

Phone: 859-622-2966

FAXED

(Note: The name shall be identical t if applicable.)

FLASH-FAX™ TO: Kim JUN 18 2009 FROM: Regina DATE: 6/18/09 PAGES INCLUDING THIS PAGE: 1 TOPS 14850

FAX #: 606-723-5471 FAX #: PHONE #: 859-622-1434

Number of Vehicles: 8

KYU Tax Identification Number: _____

Liability Insurance Carrier: Tri City INS. Service Inc.

Truck Type: _____ (Rs = Residential, RO = Roll Off, FL = Front Load)

Local Waste Haulers:

Number of Households Served: N/A

Cost per Household: $ N/A

	Truck Type	Vehicle #	Model/Mfg.	Year	Yd. Cap.	Axle	License Number
1	Chevy Packer	36	Chevy	1990	20	1	KW6771
2	Ford Packer	57	Ford Hei	1994	20	1	KW9099
3	GMC Packer	78	GMC LEA.	1998	20	1	KW1177
4	Frieghtliner	103	Frieght.	2007	20	1	W6033
5	Ford-Flat	72	Ford Fla	1990	12	1	KW8946
6	Ford- Flat	93	Ford Fla	1998	12	1	KW0728
7	GMC Dump	107	GMC Dump	1998	12	1	KW1106
8	Ford Dump	55	Ford Dum	1997	12	1	KW9992
9							
10							
11							

Signature of Applicant

6-8-09
Date

EASTERN KENTUCKY UNIVERSITY
DIRECT PAY REQUEST

CHECK #	
DATE	
AMOUNT	
INITIALS	

FACILITIES SERVICES
DEPARTMENT NAME

CPO 6A
CAMPUS MAILING ADDRESS

ESTILL COUNTY FISCAL COURT
VENDOR NAME

DIVISION OF SOLID WASTE
ADDRESS 1

130 MAIN STREET ROOM 101.
ADDRESS 2

IRVINE KY 40336
CITY, STATE & ZIP

P.O.# T0260221R

DATE 6/11/2009

VENDOR NO. 900001317

ORG. CODE/ACCOUNT NO.	510030-730500	$	200.00
ORG. CODE/ACCOUNT NO.		$	

TOTAL COST OF DIRECT PAY $200.00

INVOICE NO.	INVOICE DATE	VOUCHER NO.	AMOUNT OF INVOICE	DESCRIPTION/PURPOSE OF DIRECT PAY REQUEST
SOLID WASTE PERMIT	5/7/2009		$200.00	2009 SOLID WASTE PERMIT
				SPACE RESERVED FOR ACCOUNTING

TOTAL COST OF DIRECT PAY $200.00

APPROVED BY:
DATE:

FINANCIAL MANAGER'S SIGNATURE

Commonwealth of Kentucky
Alison Lundergan Grimes, Secretary of State

Alison Lundergan Grimes
Secretary of State
P. O. Box 718
Frankfort, KY 40602-0718
(502) 564-3490
http://www.sos.ky.gov

Certificate of Authorization

Authentication number: 135368
Visit https://app.sos.ky.gov/ftshow/certvalidate.aspx to authenticate this certificate.

I, Alison Lundergan Grimes, Secretary of State of the Commonwealth of Kentucky, do hereby certify that according to the records in the Office of the Secretary of State,

ADVANCED DISPOSAL SERVICES SOLID WASTE MIDWEST, LLC

, a limited liability company authorized under the laws of the state of Wisconsin, is authorized to transact business in the Commonwealth of Kentucky, and received the authority to transact business in Kentucky on January 26, 2007.

I further certify that all fees and penalties owed to the Secretary of State have been paid; that an application for certificate of withdrawal has not been filed; and that the most recent annual report required by KRS 14A.6-010 has been delivered to the Secretary of State.

IN WITNESS WHEREOF, I have hereunto set my hand and affixed my Official Seal at Frankfort, Kentucky, this 5th day of February, 2013, in the 221st year of the Commonwealth.

Alison Lundergan Grimes

Alison Lundergan Grimes
Secretary of State
Commonwealth of Kentucky
135368/0656044

License No 198255

Account No 117868

City Of Richmond, Kentucky

INITIAL

THIS IS TO CERTIFY THAT A LICENSE WAS GRANTED TO

ADS WASTE HOLDINGS, INC
2700 WINCHESTER ROAD
IRVINE, KY 40336

AND IS AUTHORIZED TO CONDUCT BUSINESS WITHIN THE CITY OF RICHMOND FOR THE DURATION OF THE BUSINESS

ISSUED ON FEBRUARY 10, 2015

ORIGINAL

License Fee $50.00

Sharon Cain
Director Of Finance

Appendix 9.3

Spent Lamps and the Universal Waste Requirements

DEP Division of Waste Management | 300 Sower Blvd., 2nd Floor | Frankfort, KY 40601
502-564-6716 (Telephone) | 502-564-4245 (Fax) | waste@ky.gov

In 1997, Kentucky adopted the federal provisions of the Universal Waste Rule (40 CFR Part 279) into the state regulations (401 KAR Chapter 43). In addition to the three hazardous wastes identified as universal wastes by the United States Environmental Protection Agency (EPA), Kentucky included spent lamps as a universal waste.

The state's universal waste regulations provide an alternative set of management standards that are less burdensome than the hazardous waste regulations. For listed universal wastes, generators may select whether they wish to comply with the universal waste requirements or the hazardous waste requirements based on their specific needs.

Universal wastes include:

1. Batteries, such as nickel-cadmium (Ni-Cd) and small, sealed lead-acid batteries found in electronic equipment, mobile telephones, portable computers and emergency backup lighting.

2. Pesticides that have been recalled or banned from use, are obsolete, have become damaged, or are no longer needed due to changes in cropping patterns or other factors. These have often been stored for long periods of time in sheds or barns.

3. Thermostats, which can contain as much as three grams of liquid mercury and are found in homes and commercial, industrial, agricultural, and community buildings.

4. Spent lamps, which include incandescent, fluorescent, high pressure sodium, mercury vapor, metal halide, high intensity discharge (HID), and neon bulbs or tubes. Unlike the federal Environmental Protection Agency, Kentucky identifies spent lamps as a universal waste.

What is a spent lamp?

To be *spent* a lamp must be discarded (401 KAR 43:010, Section 5). A usable lamp removed from service and sent for recycling or disposal is considered spent even if it could technically still be used for lighting. This is because the generator has made the decision that the lamp is a waste. However, a usable lamp that is removed from service at one location and re-used for lighting at another location is not considered a waste and is not considered a spent lamp. A burned out lamp becomes a waste when it is removed from the light fixture during maintenance.

A spent lamp must exhibit a hazardous characteristic under the hazardous waste rules before it can be considered a universal waste. Lamps that are not hazardous are subject to the solid waste regulations and may be disposed safely with your garbage.

Examples of spent lamps include fluorescent, high intensity discharge (HID), mercury vapor, metal halide, high pressure sodium, neon and incandescent lamps.

Why are spent lamps subject to regulation?

Hazardous waste toxicity is measured using the Toxicity Characteristic Leaching Procedure (TCLP) test (401 KAR 31:030, Section 5). Spent lamps frequently exceed toxicity standards for mercury, cadmium and lead.

Although these metals are toxic and extremely persistent in the environment when released, they can be recycled economically. This eliminates threats to the environment that results from disposal in landfills. So it is important that spent lamps be sent for recycling whenever feasible. The universal waste requirements recognize the importance of recycling and provide reduced regulatory requirements for companies that choose that option.

Spent Lamps and the Universal Waste Requirements

Are lamp ballasts subject to regulation?

Lamp ballasts hold small capacitors that may contain polychlorinated biphenyls (PCBs) or di-(2-ethylhexyl)-phthlate (DEHP) oils. In addition, ballasts may include a potting material with either of these two compounds. The ballasts may be legally managed in a contained solid waste landfill provided they are intact and not leaking and contain levels of PCBs below 50 ppm.

Lamp ballasts typically contain about one ounce of liquid. No more than 16 ballasts containing PCBs may be sent to a contained solid waste landfill at one time since that number would exceed the quantity that must be reported in the event of a release (CERCLA reportable quantity = one pound for a PCB release).

Although DEHP is a listed hazardous waste, it is only regulated if the disposed material is pure product that has never been used. Since discarded ballasts contain *used* potting material contaminated by DEHP, they are not regulated as a hazardous waste.

Ballasts are *not* considered universal wastes. They are regulated exclusively under the federal Toxic Substances Control Act (TSCA) program, and are subject to state solid waste regulations when sent to a solid waste landfill. In Kentucky, the Division of Waste Management has a TSCA coordinator who is available to assist with questions on PCB containing wastes. The TSCA coordinator can be reached at (502) 564-6716.

Can I crush my lamps on-site?

Under the universal waste requirements, generators are *not* allowed to conduct on-site treatment, which includes crushing. However, companies may choose to manage their spent lamps as a hazardous waste (instead of as a universal waste). Hazardous waste generators may request prior approval from the Division of Waste Management to treat their hazardous waste on-site during the generator accumulation period (401 KAR 32:030, Section 6). If approval is granted, the generator must comply with the hazardous waste generator requirements found in 401 KAR Chapter 32 from the date the lamps were first generated. The crushed lamps and filters would have to be sent off-site to a permitted hazardous waste facility using a hazardous waste manifest.

What are the requirements for spent lamp generators?

Although households are specifically exempt from the hazardous waste requirements, anyone else who generates spent lamps is called a *handler* of universal waste. There are two categories of handler: (1) small quantity handlers may accumulate up to 5,000 kilograms (11,000 pounds) of universal waste on-site, and (2) large quantity handlers may accumulate 5,000 kilograms or more of universal waste on-site.

Companies that produce several types of universal waste (i.e., batteries and spent lamps) must count *all* of their universal waste when determining which category of handler is appropriate.

Most of the requirements for handlers are the same whether the handler is considered small or large.

Universal waste handlers*:*

- must not dispose a universal waste on-site
- must not dilute or treat a universal waste on-site
- must label spent lamps as "UNIVERSAL WASTE-LAMPS"
- may accumulate universal wastes on-site for up to one year
- may accumulate universal wastes for *more* than one year for the sole purpose of facilitating proper recovery, treatment or disposal
- may accept universal wastes from off-site and keep them for up to one year
- must train employees on proper handling and emergency procedures
- must prevent releases to the environment
- must respond to spills and manage the residue as hazardous waste
- may self-transport to another handler, an authorized destination facility or a foreign destination
- must comply with export requirements for foreign shipment

Spent Lamps and the Universal Waste Requirements

Small quantity handlers:

- are *not* required to register or obtain an EPA identification number
- are *not* required to keep records

Large quantity handlers:

- must register and obtain an EPA identification number
- must keep records

What are the requirements for spent lamp transporters?

Transporters are prohibited from disposing, treating or diluting a universal waste. This includes crushing to consolidate lamps. Transporters must comply with Kentucky Transportation Cabinet regulations, although they are not required to use manifests. Transporters may keep universal waste at transfer facilities for up to 10 days without complying with the standards for universal waste handlers.

If spent lamps are spilled during transportation, transporters must clean up the spilled waste and all contaminated residues. Spill residue must be managed as a hazardous waste if it exhibits a characteristic (401 KAR 31:030).

Transporters may only transport spent lamps to a universal waste handler, destination facility or foreign destination. If they transport to a foreign destination, they must comply with export requirements for foreign shipments.

Can I consolidate spent lamps from different locations?

One of the big advantages of the universal waste regulations is that they allow handlers to send their spent lamps to other handlers. Under the hazardous waste program shipments of waste are only allowed to be sent to a permitted facility. However, the universal waste requirements encourage companies with multiple locations to collect their spent lamps at a convenient location for a consolidated shipment to the destination facility. In addition, small companies are able to use the services of a commercial consolidation point. In both cases, the consolidation point is considered a universal waste handler.

Sites that accumulate less than 5,000 kilograms (11,000 pounds) are considered small quantity handlers, while sites that accumulate 5000 kilograms or more are regulated as large quantity handlers.

Accumulation of spent lamps at the consolidation point is strictly limited to one year unless *more* than one year is needed for the *sole purpose* of facilitating proper recovery or disposal. The handler who keeps spent lamps for over one year bears the burden of proving that storage was necessary. Consolidation points must keep careful records to document compliance with the accumulation time limits.

Where can I send my spent lamps?

Uncrushed lamps may be sent to another universal waste handler or to a *destination facility.* Destination facilities are those facilities that treat, recycle or dispose of spent lamps. Sites where uncrushed spent lamps are only accumulated are not considered destination facilities, but are regulated as universal waste handlers.

Crushed lamps must be sent directly to a permitted hazardous waste management facility or registered recycler. Because crushed lamps do not qualify for universal waste exemptions, they may not be consolidated or shipped to another hazardous waste generator. Crushed lamp shipments must be accompanied by a hazardous waste manifest.

What are the requirements for destination facilities?

In Kentucky, a destination facility that does not store lamps prior to recycling them is only required to register with the Division as a recycler (401 KAR 43:050, Section 1(2) and 401 KAR 31:010, Section 6(3)(b)). However, if the facility stores spent lamps prior to recycling, or treats or disposes of spent lamps, it must be permitted as a hazardous waste storage, treatment or disposal facility (401 KAR 43:050, Section 1(1) and 401 KAR Chapters 34 and 38).

Destination facilities may only send spent lamps off-site to another destination facility or a foreign destination. Because universal waste shipments are not accompanied by a manifest, destination facilities must keep special tracking records.

Spent Lamps and the Universal Waste Requirements

If you have specific questions about how the universal waste requirements apply, contact the Kentucky Department for Environmental Protection Division of Waste Management at:

Office	Address	Supervisor	Phone	Counties
Frankfort Regional Office	200 Fair Oaks Lane Frankfort, KY 40601	RichardF.Thomas@ky.gov	502-564-3358	Franklin, Scott, Harrison, Robertson, Anderson, Woodford, Fayette, Bourbon, Nicholas, Mercer, Jessamine, Clark, Garrard, Madison, Estill, Powell

APPENDIX 10

TRAINING MATRIX

RECORD OF SPILL TRAINING

RIGHT-TO-UNDERSTAND SLIDE DISTRIBUTION TO NON-ATTENDEES

Spill Response Training Matrix

Information	Method	Frequency	Spill Response Coor-dinator/s	Facilities Services Staff	Forklift Drivers (Central Stores)
SPCC Plan	Annual Employee Meeting	Annually	●	●	●
MSDS and Hazard Communications (OSHA HAZCOM)	Annual Employee Meeting	Annually	●	●	●
Spill Notification and First Response - Internal Spill	Annual Employee Meeting	Annually	●	●	
EKU Emergency Action Plan	Annual Employee Meeting	Annually	●	●	
OSHA 40-hour HAZWOPER Training	Approved 40 hour course	Initial class, then refresher classes as needed	●		
Emergency Response Equipment Inspection Training	Arranged class	Initial class, then refresher classes as needed	●		
Medical Response - CPR First Aid Training	Arranged class	2 years	●		

2016 Right to Understand Attendance; highlighted not in attendance

EKU ID	LAST	FIRST	MIDDLE	ATTENDED
901458757	Abney	Rachel	Abigail	
901316376	Adams	Derek	G	
900563071	Adams	Glen	E.	
900253360	Adams	Katherine	F.	X
901627834	Adams	Lester		X
901530066	Adkinson	Melinda	S.	X
901189318	Agee	Tina	M.	X
900227855	Alexander	Donald	L.	X
901600070	Alexander	Frankie	Dean	X
901298886	Alexander	Ronald	Evan	X
901598347	Allen	Danny	K	X
901082301	Allen	David	H.	
901485907	Allen	James	Darrell	X
901553790	Allen	Kenneth	L	X
901326479	Anglin	Betty	Jane	X
901596071	Anglin	Delmar	Keith	X
901290106	Anglin	Jennifer	D	X
900379853	Anglin	Kimberly	Dawn	X
900173390	Baker	Paul	Keith	
901250173	Ballinger	Martha	Veronica	X
901622620	Barker	Ronnie		X
901501982	Barnett	Chadwick	M.	X
901438968	Baskin	Jason	S	X
901253054	Begley	Belinda	Loudean	X
901120638	Benge	Nicholas	Syrus	X
901238255	Bennett	Christopher	Leon	X
901570581	Beveridge	Andrew	Robert James	X
901311199	Bibb	Jeffrey	Michael	X
901349507	Black	Craig	O.	X
901367486	Blanton	Cecil		X
901410558	Blanton	Ladonna	F.	X
900501633	Blanton	Richard	A.	X
900563022	Bradley	Alvin	D.	X
900496174	Brinegar	Charlene	S.	
900790038	Brinegar	Ronnie	L.	X
900538545	Brock	Ruby		X
901027062	Broughton	Jennifer	L.	X
900690126	Burdette	Jackie	B	X
900690059	Cain	Billy	D.	
900202486	Cain	Danny	G.	X
900202609	Cain	Darrell	S.	
900501684	Cain	Madonna	Carol	
900195220	Cain	Ronnie	E.	
900075106	Campbell	Edward	L.	
901130991	Campbell	Mary	E.	

2016 Right to Understand Attendance; highlighted not in attendance

EKU ID	LAST	FIRST	MIDDLE	ATTENDED
901310187	Campbell	Regina	E	X
901392071	Casteel	Debra	Lynn	X
901282188	Causey	Brigitte	Johanna	X
900452813	Chambers	Kent	Brandon	X
901470592	Cheeks	James	Mark	
901121565	Cheeks	Linda	F.	X
900523833	Cheeks	Ricky	E.	X
901147617	Cheeks	Ricky	E.	X
901180738	Chenault	Stella		X
901555544	Christian	Joshua	Scott	X
900690146	Clark	James	P.	X
900538547	Clark	Opal	N.	
900234972	Clay	Helen	Marie	
901342368	Clay	James	Earl	X
901053014	Cole	Norlan	Curtis	X
901471168	Combs	Lee	Ann Brinegar	X
901024640	Combs	Steven	Ray	X
900690029	Conner	Bobby	L.	
901246080	Conner	Gary		
900255537	Conner	Timmy	Lee	X
901467538	Conrad	Jody		X
901492886	Cook	John	Richard	X
900394212	Cook	Kimberly	Lynch	
901360111	Cope	James	A.	X
901600284	Cornelison	John		X
901431706	Cornelison	Justin	D	
901391529	Cornette	Betty	J.	X
901529872	Creech	Charlotte	A.	X
901418945	Cremeans	Matthew	Ryan	X
901333956	Cress	Eddy	F	
901294906	Daniel	Diana	R.	
901391397	Davis	Brenda	S.	
901333870	Davis	James	E.	X
901458058	Davis	Stephan	Lee	X
901326277	Davis	Walter	G.	X
900227925	Deatherage	James	R.	
901128180	Denny	William	C	X
901448389	Deskins	Tandy	Ann	
901381274	Dixon	Harold	G	X
901392073	Donahue	Jerry	Lynn	X
901396874	Dozier	Deanna		X
901290167	Edington	Jerry	W.	X
901619746	Eland	Carolyn	Sue	X
901414310	Eldridge	Willis	R.	X
901429763	Embree	Joshua	David	X

2016 Right to Understand Attendance; highlighted not in attendance

EKU ID	LAST	FIRST	MIDDLE	ATTENDED
900552229	Fields	Mark	Wayne	X
901534826	Foreman	Steven	Mitchel	
901586659	Foster	Gregory		X
900266823	Frazier	Steven	W	X
900690035	Fritz	Paul	D.	X
901370603	Fryer	Ann	M	X
901588334	Glover	Faron	Lee	X
901087482	Goodloe	Andrew	Eugene	X
901156557	Graham	Chrystal	D	X
901075196	Gross	Connie		X
901416437	Hamm	Joe	H.	X
900217356	Hamm	Michael	Drew	X
901604464	Harris	Randall	Lee	X
901615593	Harris	Ronnie	A	X
901082545	Harris	Susan	L	X
901566531	Harrison	Jo	Ann	X
901409712	Harrison	Josh	R.	X
901440257	Harvey	Michelle	Ann	X
901095518	Hasty	William	G.	X
901058437	Hawkins	Ida	C.	X
901528260	Hayes	Drucilla	Kaye	X
901115538	Hazelwood	James	R.	X
901487818	Hellard	Tyler	Keith	
900563013	Hendricks	Emily	Susan	X
901422212	Hendricks	Gregory	D.	X
900413803	Hendricks	Lillian	M.	X
901282869	Hendricks	Patricia	Ann	X
901034092	Hendrix	Dennis	L.	X
901095514	Henry	Jason	A.	X
901404632	Hernandez	Maria	Garcia	X
900501601	Hickey	Gary	J.	X
901230274	Hisel	Justin	Jake	X
901454154	Hisle	Hope	Whitney	X
900202491	Hisle	Pamela	K.	X
901432190	Hisle	William	Kenneth	X
901558729	Holt	Jammie	Delaine	
901401576	Hoover	John	T.	
901375628	Hoskins	Stacy	L.	X
900293505	Howard	Brenda	Lee	X
900265791	Howard	Omer	E.	X
900334162	Huff	Bobby	J.	X
901078609	Hunter	Ronald	S.	X
900188510	Hurt	Richard	Thomas	X
900033191	Irwin	Joseph	M.	X
901627518	Isaacs	Eliza	Jane	X

2016 Right to Understand Attendance; highlighted not in attendance

EKU ID	LAST	FIRST	MIDDLE	ATTENDED
901531389	Isaacs	Penny	J.	X
901189062	Jackson	Johnny	W	X
900501719	Jackson	Leroy		
900501612	Jackson	Theresa	S	X
900501748	Johnson	Bethany	Lee	X
901391836	Johnson	Clerisa	Maria	X
901142890	Johnson	Janet	L.	X
900501750	Johnson	Michael	C.	X
900293466	Jones	Darrel	E.	X
900417130	Jones	Edward	D.	X
900501649	Kaylor	David	C.	X
900547778	Keathley	Brian		X
901482159	Keene	Carolyn	A.	X
901247173	Kendrick	Floyd	W	
901386129	Kincaid	Ross	Paul	
900225991	King	Dale	Eugene	X
901361509	Kirby	Gregory	W.	X
901326738	Kong	Mary	Kay Shelton	X
901575178	LaFollette	Scott	Alan	X
901251208	Lainhart	Rebecca	C	X
901499943	Lainhart	Rebecca	Rose	X
901473896	Lamb	Jackie	L.	X
901559916	Land	Charles	Anthony	X
901314829	Lanter	Aaron	W.	X
901318424	Lawson	Sandra	L.	X
901528315	Lear	Tabatha	Kay	X
900245558	Lewis	Eric	T.	X
901433749	Lewis	Shaun	Gregory	X
901504713	Lockhart	Jennie	L.	X
901094750	Logan	Anthony	Taylor	X
900690065	Long	Ian	M	X
900073145	Lovett	Edgar	L.	X
900563095	Marlow	Nathan	Keith	X
901499861	Marshall	Teresa		X
900563040	Martin	Josephine	Ann	X
900202742	Mason	Michael		X
900538559	Matthews	Connie	M.	X
900690150	Matthews	Russell	L.	X
901103307	Mayfield	Dwayne		X
900790019	Mayfield	Ruth	Y. Ballew	X
901399580	McCreary	Scott		X
900270412	McElroy	Karen	Ann	X
901504159	McHone	Dixie	W.	X
901536920	Mchone	Jeremy	Tyler	X
900690044	McHone	Ronnie	P.	X

2016 Right to Understand Attendance; highlighted not in attendance

EKU ID	LAST	FIRST	MIDDLE	ATTENDED
900501686	McKinney	Eugene	C.	X
901616234	McKoy	Rose	Mary	
901540700	Mcnew	Alan		X
900236957	McQueen	Linda		X
900230442	Merlin	Mary	Elizabeth	X
900293470	Milligan	Lisa	C.	
901644401	Mills	Gracie		
900067632	Mink	Ronald	E.	
900133570	Minter	Steven	Eugene	X
901278104	Mitchell	Dwight	Allen	X
901177724	Moberly	Gilbert	W.	X
900492147	Moberly	Gregory	Joe	X
900690225	Muncie	Vernon	J.	X
900496851	Murray	Adria	Leah	X
900094428	Neal	Kevin	C.	X
901621232	Neill	Julius	Edward	
901447589	Noland	Lisa	Kathryn	X
901415725	Noland	Rhonda	J.	X
901572826	Northern	Deborah	K	
901385878	Obergfell	Christopher	Joseph	X
900367115	Officer	Donna	J.	X
900202435	Oliver	Limuel	B.	
900690139	Parks	Robert	L.	X
901457946	Pasley	Teresa	Rector	X
901474148	Pearl	Chris	Robert	
901427683	Pingleton	Daniel	Ray	X
901411525	Pingleton	Donald	R.	X
900202427	Pingleton	Fred	Marshall	X
900202738	Powell	Billy	Wayne	X
901525501	Powell	Clinton	Lucas	X
900501653	Powell	Dwight	M.	X
901243958	Powell	Lula		X
901575176	Powell	Marcie	Kelley	
901580314	Rader	Toby	Michelle	X
901187941	Rafuna	Murat		X
901135485	Ragle	Donna	K	X
901375629	Ray	Angela	K	X
901488220	Reams	Angelic	D.	X
900087357	Reedy	Patti	G.	X
901397308	Renfro	Benny	T.	X
900306090	Renfro	Edna	A.	X
900443894	Renfro	Sharon	Joyce	X
901087696	Renfro	Tammy	S.	
900065857	Rhodes	William	Taylor	
901422748	Rhodus	James	I.	

2016 Right to Understand Attendance; highlighted not in attendance

EKU ID	LAST	FIRST	MIDDLE	ATTENDED
901360767	Rhodus	Ricky	Winston	X
901414489	Richardson	Brenda	L.	
901202341	Richardson	Melinda	Rose	X
901558462	Robbins	Damaris	Faye	X
900073261	Robbins	Earl	Lowell	X
901156535	Roberts	Adam	Corey	X
900293464	Roberts	William	H.	X
900457150	Robertson	Cathy	A.	X
900197320	Robertson	Roger	Dean	X
900248281	Robinson	Toffee	Lovett	X
900202853	Rose	Roy	Lynn	X
901413147	Rose	Shannon	L.	X
901360795	Rose	Teddy	Ray	X
901397307	Rowe	David	R.	
901139134	Ruble	Christopher	A.	X
901558730	Russell	Timothy	Allen	X
900690018	Scott	Connie	Leigh	X
901415662	Shanks	Carl		X
901441488	Sheets	Mary	Etta	X
901490706	Shouse	Natasha	Nicole	
901172919	Shultz	Kyle	A	X
900054388	Simmons	Vicki	H.	
900306071	Simpson	Debra	J.	X
901014966	Simpson	Randy	Alan	X
901460524	Simpson	William	Travis	X
901138632	Sizemore	Curtis	Taylor	
901115657	Sizemore	Joyce	Ann	X
901508867	Smith	Brenda	Gale	X
901255415	Smith	Corey	Kenton	X
900563068	Smith	Garney	G.	
901388511	Smith	Kenna	Lee	X
901357540	Smoot	Jonathan	E Kory	X
901390578	Snell	Cheyenne	L	X
901029184	Sorrell	Elisha	A.	
900202498	Sowers	John	S.	X
901492611	Sparks	Christopher	Shane	X
901308964	Sparks	Jerry	Alan	X
900432103	Sparks	Timothy	L.	
901502099	Spears	Gary	Wayne	
900385777	Stamper	Tina	Masters	X
901309378	Stapp	Randy	J.	X
901466279	Still	Brittany	Michelle	X
901527014	Still	Carl	Glenn	X
901515479	Still	Jordan	Scott	X
900501648	Stone	Charles	E.	X

2016 Right to Understand Attendance; highlighted not in attendance

EKU ID	LAST	FIRST	MIDDLE	ATTENDED
901627520	Stone	Jacqueline		X
901525312	Stone	Magan	Lee	X
901265716	Strange	Paul	Edward	X
901452197	Swinegar	Daniel	L.	X
901139136	Swinegar	Donald	R	
900068781	Tate	Keith	R.	
900274877	Taylor	Judith	J.	X
901274940	Thomas	Carlean		X
901481628	Townsend	Katherine	L.	X
901602343	Turner	Jermane	C	X
900409703	Turner	Troy	D	X
901457139	Virgin	Andrew	Blake	X
900256675	Walker	Jeffrey	Lee	X
901443160	Walker	Marcus	J.	X
901478455	Walker	Steven	Ernest	X
901584844	Warren	Willie	J	
900501741	Watts	Donald	L.	X
900114818	Way	William	Burnett	
901415635	Westenhoefer	Phyllis	A.	
900501743	Wheat	Bert	C.	X
901624738	White	Rosemary	Ann	X
901251279	White	Shon	C	X
900563062	Wilburn	Christina	M	X
901623372	Wilhoit	Emily	Sue	X
900032943	Williams	David	Leo	X
901474929	Williams	Steven		X
901443104	Willis	Kathy	Arlene	X
901115534	Willis	Kyle	D.	
901480668	Willis	Travis	Keith	X
900274906	Wilson	Randall	Eugene	
901589672	Wiseman	Jeffery	Glenn	X
901390432	Wiseman	Jeremy	Russell	X
901466431	Wiseman	Justin	Kyle	X
900563043	Wiseman	Timothy	R.	X
901620449	Witt	Carolyn	S	X
901289367	Woolery	Linda	Jean	X
901238135	Wright	Cecil	E	X
901572819	Wright	Saul	David	X
901414494	Young	William	Barney	
	Miller	Chris		X
	Davis	Marlyin		X
	Marshall	Michael		X
	Howard	Wanda		X
	Allen	Seth		X
	Penniman	Henry		X

2016 Right to Understand Attendance; highlighted not in attendance

EKU ID	LAST	FIRST	MIDDLE	ATTENDED
	Muncie	Kagan		X
	Allen	Logan		X
	Lewush	Meaghan		X
	Fisher	Samuel		X

Rhodes, Bill

From: Rhodes, Bill
Sent: Friday, July 08, 2016 9:14 PM
To: Abney, Rachel; Adams, Derek; Adams, Glen; Allen, David; Baker, Paul; Brinegar, Nannie; Cain, Billy; Cain, Darrel; Cain, Madonna; Cain, Ronnie; Campbell, Edward; Campbell, Mary; Cheeks, James; Cheeks, Ricky; Cheeks, Ricky E (JR); Clark, Opal; Clay, Helen; Conner, Bobby; Conner, Gary; Cook, Kimberly; Cornelison, Justin; Cress, Eddy; Daniel, Diana; Davis, Brenda; Deatherage, James; Deskins, Tandy; Foreman, Steve; Holt, Jammie; Hoover, John; Jackson, Leroy; Kendrick, Floyd; Kincaid, Ross; Mckoy, Rosemary; Milligan, Lisa; Mills, Gracie; Mink, Ron; Neil, Julius; Northern, Deborah; Oliver, Limuel; Pearl, Chris; Renfro, Tammy; Rhodus, James; Rowe, David; Simmons, Vicki; Sizemore, Curtis; Smith, Garney; Sorrell, Elisha; Sparks, Timothy; Spears, Gary; Swinegar, Donald; Tate, Keith; Warren, Willie; Way, William; Westenhoefer, Phyllis; Willis, Kyle; Wilson, Randy; Young, William; Simpson, Debbie
Cc: Gaither, Dekia; Makinen, Bryan; Cook, John; Gannoe, Paul
Subject: RE: Right to Understand 2016 Slides

< detached SPCC SWQ Review Annual 2016.pdf >

Please also review the attached slides from required annual training.

-----Original Message-----
From: Simpson, Debbie
Sent: Friday, July 08, 2016 7:46 AM

< detached doc02489120160708072022.pdf >

Attached is a copy of the slides from the Right to Understand 2016 training. Please review the attachment. If you have any problem with the file please just let me know.

Thanks
Debbie Simpson

APPENDIX 11

SPILL NOTIFICATION DECISION TREE
HAZARDOUS WASTE DISPOSAL PROCEDURE

Spill Notification Decision Tree

CERCLA or EPCRA Releases

1	WHAT SPILLED - EPCRA EHS, CERCLA HS, or CWA HS MATERIAL or
2	WHICH PROGRAM IS CHEMICAL UNDER?

3	Appendix 16 - EPCRA EHS 40 CFR 355.50	Appendix 15 - CERCLA HS 40 CFR 302.4	Appendix 17 - CWA HS 40 CFR 117.3

4

EPCRA MATERIAL

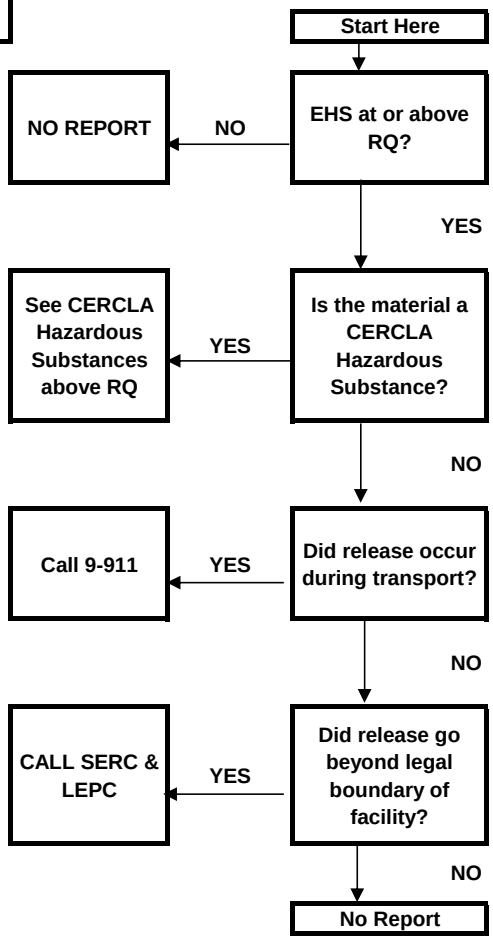

CERCLA OR CWA MATERIAL

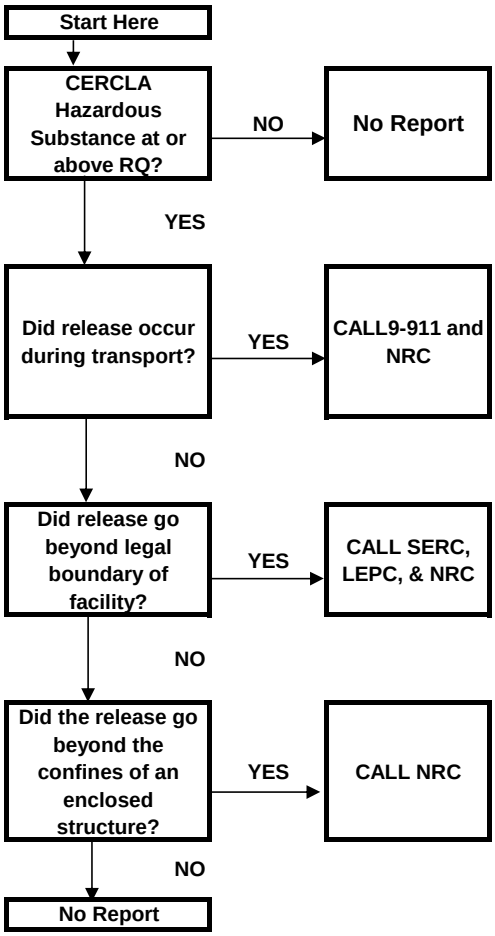

Emergency Phone Numbers

LEPC	LEPC Phone No.	911
NRC	National Response Center Phone No.	1-800-424-8802
KYERT	Kentucky Emergency Response Team	1-800-928-2380

PETROLEUM RELEASE TO ENVIRONMENT - REPORTING

25 Gallons of Petroleum in 24-hours 75 Gallons of Diesel Fuel Sheen on Waters of the US (off property)	IMMEDIATE PHONE CALL TO KYERT and NRC

Eastern Kentucky University

Serving Kentuckians Since 1903

AdamsHuse
521 Lancaster Avenue
Eastern Kentucky University
Richmond, KY 40475
(859) 622-2421
(859) 622-8987
Fax: 859-622-1258

Revised: August 30, 2016

Hazardous Waste Pick-up

Here at Eastern Kentucky University we have several hazardous waste collection sites, based on past and present hazardous waste generation. Hazardous waste collection from these sites will be arranged on an as needed bases. The following locations have been identified as possible regulated hazardous waste collection sites with identified satellite accumulation areas:

- Fire Protection and Safety Lab
- Arlington
- B. Carter Building
- Campbell Building
- Facility Services (General)
- Craft Building
- Madison/Central Kentucky Regional Airport
- Meadowbrook Farms
- Memorial Science Building
- Model Laboratory School
- Moore Science Building
- New Science Building
- Whaling Complex

Individuals who have been designated within the above facilities determine if there is hazardous waste that requires collection. If collection is needed, prepare the materials and schedule collection with Environmental Health and Safety.

Preparation for collection of Hazardous Waste Materials:

1. Affix 2 copies of the complete Hazardous Waste Disposal Form to each waste item to be collected. Make sure one copy of the form can be easily removed.
2. Keep containers of incompatible chemicals separated. If you have any questions about incompatible chemicals, call Environmental Health and Safety at 622-2421 or 622-8987.
3. Colleges of Sciences designees should contact Larry Miller at 622-6355 to schedule waste collection. All others call Environmental Health and Safety at 622-2421 or 622-8987.

Items that cannot be accepted:

1. "Unknowns/unidentified"
2. Biohazardous waste
3. Unmarked, damaged or leaking containers
4. Liquid waste in a single container that contains more than 5 gallons
5. Solid waste in a single container that weighs more than 40 pounds
6. **Containers without Hazardous Waste Disposal**

Pick-Up Date:	Contents:			
	Container Size:		Amt. of Material:	
Accumulation Start Date:	Contact Person:		Contact Phone #:	
	Precautions:	Combustible Corrosive Explosive Flammable Oxidizer Toxic		
	Notes:			

EKU * Office of Environmental Health & Safety * 622-2421 or 622-8987 * Hazardous Waste Pick-up

Pick-Up Date:	Contents:			
	Container Size:		Amt. of Material:	
Accumulation Start Date:	Contact Person:		Contact Phone #:	
	Precautions:	Combustible Corrosive Explosive Flammable Oxidizer Toxic		
	Notes:			

EKU * Office of Environmental Health & Safety * 622-2421 or 622-8987 * Hazardous Waste Pick-up

Pick-Up Date:	Contents:			
	Container Size:		Amt. of Material:	
Accumulation Start Date:	Contact Person:		Contact Phone #:	
	Precautions:	Combustible Corrosive Explosive Flammable Oxidizer Toxic		
	Notes:			

EKU * Office of Environmental Health & Safety * 622-2421 or 622-8987 * Hazardous Waste Pick-up

Pick-Up Date:	Contents:			
	Container Size:		Amt. of Material:	
Accumulation Start Date:	Contact Person:		Contact Phone #:	
	Precautions:	Combustible Corrosive Explosive Flammable Oxidizer Toxic		
	Notes:			

EKU * Office of Environmental Health & Safety * 622-2421 or 622-8987 * Hazardous Waste Pick-up

Pick-Up Date:	Contents:			
	Container Size:		Amt. of Material:	
Accumulation Start Date:	Contact Person:		Contact Phone #:	
	Precautions:	Combustible Corrosive Explosive Flammable Oxidizer Toxic		
	Notes:			

EKU * Office of Environmental Health & Safety * 622-2421 or 622-8987 * Hazardous Waste Pick-up

Pick-Up Date:	Contents:			
	Container Size:		Amt. of Material:	
Accumulation Start Date:	Contact Person:		Contact Phone #:	
	Precautions:	Combustible Corrosive Explosive Flammable Oxidizer Toxic		
	Notes:			

APPENDIX 12

STANDARD OPERATING PROCEDURE – PETROLEUM SPILL

SPILL NOTIFICATION FORM

Appendix 12.1

Standard Operating Procedure - Petroleum Spill

1.0 Purpose

The purpose of this Environmental/Safety Work Instructions (ESI) is to describe Petroleum Spill Response actions and responsibilities.

2.0 Scope

This ESI covers actions to be followed by EKU staff, venders, visitors, contractors, and any other personnel who are at the plant when emergency response is required related to hazardous material spill response.

3.0 Definitions

- **CAAA** – Clean Air Act Amendments of 1990
- **CERCLA** – Comprehensive Environmental Response, Compensation, and Liability Act of 1980 Hazardous Substances
- **CFR** – Code of Federal Regulations
- **CWA** – Clean Water Act
- **EPA** – Environmental Protection Agency
- **EPCRA** – Emergency Planning and Community Right to Know Act
- **Extremely Hazardous Substance** – EPCRA Materials subject to EPCRA reporting if released and listed in 40 CFR 355.2: Examples include hydrochloric acid, nitric acid and ; nerve and blister agents designated under state law.
- **Hazardous Air Pollutant** – CAAA Materials referenced in 40 CFCR Part 70 and specifically listed in 401 KAR 63:060 Section 2. Examples include hexane, chlorine, and toluene.
- **Hazardous Substance** –
    - CERCLA Materials listed in 40 CFR 302.4 (see Appendix Tab 19): Examples – hydrochloric acid, ferric chloride Reportable quantities for listed hazardous substances, set forth in 40 CFR 302, range from 1 to 5000 pounds (0.454 to 2270 kg, or ~ 1 pint to ~ 500 gal.).
    - Pollutants or contaminants - materials, which when released into the environment in a quantity, may present an imminent or substantial danger to the public health or welfare.
    - Petroleum or petroleum products - other than a permitted release or application of a pesticide in accordance with the manufacturer's instructions.

- **List of Lists** – US EPA Consolidated List of Chemicals subject to EPCRA and Section 112(r) of the CAA
- **Mixture RQ** – if the quantity of all hazardous constituents in the mixture are not known, the reporting requirement applies if the total volume of the mixture equals or exceeds the RQ for the constituent with the lowest RQ.
- **MS_4** – Municipal Separate Storm Sewer System – EKU is located outside of an urbanized area (UA) as defined by the Bureau of Census, but has been designated an MS_4 by the state NPDES permitting authorities.
- **NRC** – National Response Center 1-800-424-8802 - used for reporting releases of materials above the RQ or reportable releases of petroleum to waters of the US
- **Petroleum** – Materials defined in 40 CFR 112 and listed in the Coast Guard Memo (see Appendix Tab 23): Examples, gasoline, oil, TCE
- **Planned Release** – Release of material approved by a regulatory agency (i.e. permitted release – to air, land, water)
- **Release** – The discharge of a hazardous substance due to malfunction or failure of equipment or human error to a dike, water, land, air, or to the plant floor
- **RCRA** – Resource Conservation and Recovery Act (hazardous waste)
- **RQ -** Reportable Quantity – pounds of material listed CERCLA (302.4) or EPCRA (304) that if released (immediately or over a 24-hour period) must be reported to regulatory agencies
    - **RQ - Petroleum or Oil** 25 gallons or more of a petroleum product within a 24-hour period and 75 gallons or more of diesel fuel in a 24-hour period
    - **RQ – Petroleum Sheen -** any amount that creates a visible sheen on surface waters of the US (not inside a secondary containment dike).
- **SARA** – Superfund Amendments and Reauthorization Act of 1986
- **Toxic Chemicals –** EPCRA Section 313 Materials listed in 40 CFR 372: Examples include diisocyanates, dioxins, sulfuric acid, n-hexane
- **Unplanned Release –** release of reportable material due to an emergency event

4.0 Responsibilities

Spill Coordinator

- For purposes of this procedure, the President has delegated to the Director of Environmental Health & Safety the responsibility of Spill Response Coordinator and spill notification
- For purposes of this procedure, the President has delegated to the Director of Facilities Services the responsibility of administrative plan control

Specific Spill Actions are listed in this SOP; Section 5. The petroleum spill responses have been prepared for the following categories of material spills:

- This SOP section 4.1 – Oil Spill or Petroleum Spill
    - Bulk Chemicals

There are three levels of spill response based on the type of material spilled or released. These include operator spill response, spill team spill response, and outside contractor spill response (may include agency spill response). The quantities that define the levels of spill response are summarized in the attached table titled CHEMICAL RELEASE RESPONSE MATRIX (see SOP – Spill Notification and Reporting Response, Section 1.6).

4.1 Oil Spill or Petroleum Spill - Responsibilities

Oil or petroleum spills at this facility can occur at oil unloading, transfer, and bulk storage tanks processing, and storage; transformer pads; equipment sumps and oil reservoirs

Oil includes (per US Coast Guard definition – see Appendix Tab 19) oil, fuel oil, lubricating oil, compressor oil, hydraulic oil, greases, and fats.

All Staff and Visitors

- Unless trained to do so, evacuate and warn others as necessary.
- Attend to victims if injuries are present
- Refer to the CHEMICAL RELEASE RESPONSE MATRIX attached to this procedure to determine who responds to what level of spill at this facility
- Use the following for emergencies:
    - Local Police, Fire, Medical – 911
    - Spill Response Coordinator

Spill Team

- Assess Scene

- Wearing appropriate personal protective equipment and clothing
- Start containment and spill control actions
- Once spill is contained and controlled, spill team will start cleanup and decontamination procedures
- Restock emergency equipment/materials used in spill response

Spill Response Coordinator

- Direct spill response actions
- Implement evacuation if required
- Act as incident commander until agency responder takes over
- Implements notification of National Response Center and other agencies based on the CHEMICAL RELEASE REPORTING/NOTIFICATION TABLE (see SOP – Spill Notification and Reporting Response, Section 1.6)
- Implements spill cleanup and disposal activities
- Initiates spill plan review and revision as needed based on details of spill
- Updates personnel training as needed based on details of spill and spill response
- Implements reorder and replacement of spill response materials, decontamination materials, and personal protective equipment used in spill response
- Maintains and updates Bulk Material Container and Containment Details

5.0 Procedures/Policy

POLICY - PROTECT LIFE FIRST, ENVIRONMENT SECOND, PROPERTY LAST

5.1 Oil Spill or Petroleum Spill

If oil or petroleum, as defined by the US Coast Guard memo in Appendix Tab 19 is spilled in any quantity the following spill response procedure should be followed:

All Staff and Visitors

- Unless trained to do so, evacuate and warn others as necessary.
- Based on the quantity of oil spilled (see CHEMICAL RELEASE RESPONSE MATRIX, SOP – Spill Notification and Reporting Response, Section 1.6) respond to the spill or contact spill response contractor
- Notify the spill team of a spill of petroleum

- If evacuation is required – follow evacuation route to nearest exit and assemble at evacuation rally point:
- If trained – contain and control spill

Spill Team

- Assess Scene
- Determine hazard or hazards created as a result of the spill
- Wearing appropriate personal protective equipment and clothing, start containment and spill control actions
- Conduct one or more of the following tasks (as required):
  - shut down equipment
  - isolate a leak in a line with valves
  - upright a leaking drum or container
  - apply sorbent material
  - plug a leak with a peg, tape, etc.
  - block floor drains, storm drains, or ditches
  - build a dike to prevent spread of material (i.e., soil, sand, clay, absorbent, spill control booms, etc.)
  - direct personnel away from the spill area
  - at a safe distance from the spill, and out of the spill's path, meet and orient emergency service units
- Once spill is contained and controlled, spill team will start cleanup and decontamination procedures including the following:
  - Using available empty barrels, pump spilled materials into drums or empty containers for disposal
  - Using appropriate decontamination materials clean all areas that have been part of the spill and place waste materials, used clothing, used pigs, used adsorbent materials, and other contaminated material in waste drums
  - Move spilled material barrels to waste storage pad
  - Label spilled material containers using appropriate waste material classification
- Inventory materials used in spill response and place restock order with Spill Response Coordinator

Spill Response Coordinator

- Direct spill response actions
- Implement evacuation if required
- Acts as incident commander until agency responder takes over
- Implements notification of National Response Center and other agencies based on the CHEMICAL RELEASE REPORTING/NOTIFICATION TABLE (see SOP – Spill Notification and Reporting Response, SOP – Spill Notification and Reporting Response, Section 1.6)
- Prepares (or reviews supervisor prepared) SPILL NOTIFICATION FORM
- Implements spill cleanup and disposal activities
- Updates spill plan review and revision as needed based details of spill
- Updates personnel training as needed based on details of spill and spill response
- Prepares POST INCIDENT EMERGENCY AND ACCIDENT REPORT
- Implements reorder and replacement of spill response materials, decontamination materials, and personal protective equipment used in spill response
- Maintains and updates Petroleum Storage and Containment Inventory Table (See Appendix Tab 3)

1. **Notes/Remarks – None**
2. **Documentation**

   Post Incident Emergency and Accident Report
3. **Revision Service – None**
4. **Distribution – All Staff**
5. **Attachments – None**
6. **Document References**
   - Emergency SOP's
   - SOP Spill Release Notification Reporting
   - Emergency and Agency Contact Phone List
7. **Reason for Revision – included as part of 3 year review of BMP and GPP**

Appendix 12.2

Spill Notification Form

Name of person completing form:	Date of report/call:	Time of report/call:
Facility Name and Address: EKU Richmond, Kentucky Building Name or Location _____		Facility phone number 859- _____ Bldg Phone
Spill date:	Spill time:	
Type of material spilled:		
Estimated total quantity spilled:		
Estimated total quantity spilled into navigable waters:		
Source of the spill:		
Receiving water (Taylor Fork Creek) affected (yes no)	On Property Only (yes no)	Richmond Sewer (yes no)
Cause of spill:		
Any damage or personal injury caused by spill:		
Actions taken by facility to stop, remove, or mitigate the effects of the spill:		
Evacuation required? (yes no)		
Names of individuals and agencies contacted including the following:		
National Response Center (800) 424-8802	Name of person contacted:	Log Number of Call (if any)
Kentucky Emergency Response Commission (502) 564-7815	Name of person contacted:	Log Number of Call (if any)
Local Emergency Response 911	Name of person contacted:	Log Number of Call (if any)
Local POTW (859) 623-2323		
Post spill response follow-up actions (name and date)	Written report filed with Ky. Div of Waste Mgmt within 15 days	(yes no)
	Restock response materials	(yes no) Date:
Corrective actions	Waste/spill material removal:	
	SPCC plan review/update:	
	Other:	

APPENDIX 13

LIST OF SIGNIFICANT SPILLS AND LEAKS

Appendix 13

LIST OF SIGNIFICANT SPILLS AND LEAKS
3 Years prior to current Plan date

Completed by: _____

Title: _____

Date Occurred	Substance	Source	Location (Appendix 3 Bldg Key)	Total Quantity	Flow Direction	Cause	Affected Area(s)	Amount of Material Recovered
	Corrective Action(s):				Preventative Measure(s):			
	Corrective Action(s):				Preventative Measure(s):			
	Corrective Action(s):				Preventative Measure(s):			
	Corrective Action(s):				Preventative Measure(s):			
	Corrective Action(s):				Preventative Measure(s):			
	Corrective Action(s):				Preventative Measure(s):			

APPENDIX 14

EMERGENCY RESPONSE GUIDE - PETROLEUM

Flammable Liquids (Non-Polar/Water-Immiscible)

POTENTIAL HAZARDS

FIRE OR EXPLOSION

- **HIGHLY FLAMMABLE: Will be easily ignited by heat, sparks or flames.**
- Vapors may form explosive mixtures with air.
- Vapors may travel to source of ignition and flash back.
- Most vapors are heavier than air. They will spread along ground and collect in low or confined areas (sewers, basements, tanks).
- Vapor explosion hazard indoors, outdoors or in sewers.
- Those substances designated with a **"P"** may polymerize explosively when heated or involved in a fire.
- Runoff to sewer may create fire or explosion hazard.
- Containers may explode when heated.
- Many liquids are lighter than water.
- Substance may be transported hot.
- **If molten aluminum is involved, refer to GUIDE 169.**

HEALTH

- Inhalation or contact with material may irritate or burn skin and eyes.
- Fire may produce irritating, corrosive and/or toxic gases.
- Vapors may cause dizziness or suffocation.
- Runoff from fire control or dilution water may cause pollution.

PUBLIC SAFETY

- **CALL Emergency Response Telephone Number on Shipping Paper first. If Shipping Paper not available or no answer, refer to appropriate telephone number listed on the inside back cover.**
- As an immediate precautionary measure, isolate spill or leak area for at least 50 meters (150 feet) in all directions.
- Keep unauthorized personnel away.
- Stay upwind.
- Keep out of low areas.
- Ventilate closed spaces before entering.

PROTECTIVE CLOTHING

- Wear positive pressure self-contained breathing apparatus (SCBA).
- Structural firefighters' protective clothing will only provide limited protection.

EVACUATION

Large Spill

- Consider initial downwind evacuation for at least 300 meters (1000 feet).

Fire

- If tank, rail car or tank truck is involved in a fire, ISOLATE for 800 meters (1/2 mile) in all directions; also, consider initial evacuation for 800 meters (1/2 mile) in all directions.

EMERGENCY RESPONSE

FIRE

CAUTION: All these products have a very low flash point: Use of water spray when fighting fire may be inefficient.

CAUTION: For mixtures containing a high percentage of an alcohol or polar solvent, alcohol-resistant foam may be more effective.

Small Fires

- Dry chemical, CO_2, water spray or regular foam.

Large Fires

- Water spray, fog or regular foam.
- Use water spray or fog; do not use straight streams.
- Move containers from fire area if you can do it without risk.

Fire involving Tanks or Car/Trailer Loads

- Fight fire from maximum distance or use unmanned hose holders or monitor nozzles.
- Cool containers with flooding quantities of water until well after fire is out.
- Withdraw immediately in case of rising sound from venting safety devices or discoloration of tank.
- ALWAYS stay away from tanks engulfed in fire.
- For massive fire, use unmanned hose holders or monitor nozzles; if this is impossible, withdraw from area and let fire burn.

SPILL OR LEAK

- ELIMINATE all ignition sources (no smoking, flares, sparks or flames in immediate area).
- All equipment used when handling the product must be grounded.
- Do not touch or walk through spilled material.
- Stop leak if you can do it without risk.
- Prevent entry into waterways, sewers, basements or confined areas.
- A vapor suppressing foam may be used to reduce vapors.
- Absorb or cover with dry earth, sand or other non-combustible material and transfer to containers.
- Use clean non-sparking tools to collect absorbed material.

Large Spills

- Dike far ahead of liquid spill for later disposal.
- Water spray may reduce vapor; but may not prevent ignition in closed spaces.

FIRST AID

- Move victim to fresh air.
- Call 911 or emergency medical service.
- Give artificial respiration if victim is not breathing.
- Administer oxygen if breathing is difficult.
- Remove and isolate contaminated clothing and shoes.
- In case of contact with substance, immediately flush skin or eyes with running water for at least 20 minutes.
- Wash skin with soap and water.
- Keep victim warm and quiet.
- In case of burns, immediately cool affected skin for as long as possible with cold water. Do not remove clothing if adhering to skin.
- Ensure that medical personnel are aware of the material(s) involved and take precautions to protect themselves.

APPENDIX 15

CERCLA HAZARDOUS SUBSTANCE LIST – 40 CFR 302.4

CERCLA HAZARDOUS SUBSTANCE LIST – 40 CFR 302.5

United States that does not meet the definition of tributary or through a non-jurisdictional water to a water identified in paragraphs (1)(i) through (iii) of this definition.

(iv) *Wetlands.* The term *wetlands* means those areas that are inundated or saturated by surface or groundwater at a frequency and duration sufficient to support, and that under normal circumstances do support, a prevalence of vegetation typically adapted for life in saturated soil conditions. Wetlands generally include swamps, marshes, bogs, and similar areas.

(v) *Significant nexus.* The term *significant nexus* means that a water, including wetlands, either alone or in combination with other similarly situated waters in the region, significantly affects the chemical, physical, or biological integrity of a water identified in paragraphs (1)(i) through (iii) of this definition. The term ''in the region'' means the watershed that drains to the nearest water identified in paragraphs (1)(i) through (iii) of this definition. For an effect to be significant, it must be more than speculative or insubstantial. Waters are similarly situated when they function alike and are sufficiently close to function together in affecting downstream waters. For purposes of determining whether or not a water has a significant nexus, the water's effect on downstream (1)(i) through (iii) waters shall be assessed by evaluating the aquatic functions identified in paragraphs (3)(v)(A) through (I) of this definition. A water has a significant nexus when any single function or combination of functions performed by the water, alone or together with similarly situated waters in the region, contributes significantly to the chemical, physical, or biological integrity of the nearest water identified in paragraphs (1)(i) through (iii) of this definition. Functions relevant to the significant nexus evaluation are the following:

(A) Sediment trapping,

(B) Nutrient recycling,

(C) Pollutant trapping, transformation, filtering, and transport,

(D) Retention and attenuation of flood waters,

(E) Runoff storage,

(F) Contribution of flow,

(G) Export of organic matter,

(H) Export of food resources, and

(I) Provision of life cycle dependent aquatic habitat (such as foraging, feeding, nesting, breeding, spawning, or use as a nursery area) for species located in a water identified in paragraphs (1)(i) through (iii) of this section.

(vi) *Ordinary high water mark.* The term *ordinary high water mark* means that line on the shore established by the fluctuations of water and indicated by physical characteristics such as a clear, natural line impressed on the bank, shelving, changes in the character of soil, destruction of terrestrial vegetation, the presence of litter and debris, or other appropriate means that consider the characteristics of the surrounding areas.

(vii) *High tide line.* The term *high tide line* means the line of intersection of the land with the water's surface at the maximum height reached by a rising tide. The high tide line may be determined, in the absence of actual data, by a line of oil or scum along shore objects, a more or less continuous deposit of fine shell or debris on the foreshore or berm, other physical markings or characteristics, vegetation lines, tidal gages, or other suitable means that delineate the general height reached by a rising tide. The line encompasses spring high tides and other high tides that occur with periodic frequency but does not include storm surges in which there is a departure from the normal or predicted reach of the tide due to the piling up of water against a coast by strong winds such as those accompanying a hurricane or other intense storm.

§ 302.4 Designation of hazardous substances.

(a) *Listed hazardous substances.* The elements and compounds and hazardous wastes appearing in table 302.4 are designated as hazardous substances under section 102(a) of the Act.

(b) *Unlisted hazardous substances.* A solid waste, as defined in 40 CFR 261.2, which is not excluded from regulation as a hazardous waste under 40 CFR 261.4(b), is a hazardous substance under section 101(14) of the Act if it exhibits any of the characteristics identified in 40 CFR 261.20 through 261.24.

NOTE: The numbers under the column headed ''CASRN'' are the Chemical Abstracts Service Registry Numbers for each hazardous substance. The ''Statutory Code'' column indicates the statutory source for designating each substance as a CERCLA hazardous substance: ''1'' indicates that the statutory source is section 311(b)(2) of the Clean Water Act, ''2'' indicates that the source is section 307(a) of the Clean Water Act, ''3'' indicates that the source is section 112 of the Clean Air Act, and ''4'' indicates that the source is section 3001 of the Resource Conservation and Recovery Act (RCRA). The ''RCRA Waste Number'' column provides the waste identification numbers assigned to various substances by RCRA regulations. The ''Pounds (kg)'' column provides the reportable quantity adjustment for each hazardous substance in pounds and kilograms. Appendix A to § 302.4, which lists CERCLA hazardous substances in sequential order by CASRN, provides a per-substance grouping of regulatory synonyms (*i.e.*, names

by which each hazardous substance is identified in other statutes and their implementing regulations).

TABLE 302.4—LIST OF HAZARDOUS SUBSTANCES AND REPORTABLE QUANTITIES

[Note: All Comments/Notes Are Located at the End of This Table]

Hazardous substance	CASRN	Statutory code†	RCRA waste No.	Final RQ pounds (Kg)
A2213	30558431	4	U394	5000 (2270)
Acenaphthene	83–32–9	2		100 (45.4)
Acenaphthylene	208–96–8	2		5000 (2270)
Acetaldehyde	75–07–0	1,3,4	U001	1000 (454)
Acetaldehyde, chloro-	107–20–0	4	P023	1000 (454)
Acetaldehyde, trichloro-	75–87–6	4	U034	5000 (2270)
Acetamide	60–35–5	3		100 (45.4)
Acetamide, N-(aminothioxomethyl)-	591–08–2	4	P002	1000 (454)
Acetamide, N-(4-ethoxyphenyl)-	62–44–2	4	U187	100 (45.4)
Acetamide, N-9H-fluoren-2-yl-	53–96–3	3,4	U005	1 (0.454)
Acetamide, 2-fluoro-	640–19–7	4	P057	100 (45.4)
Acetic acid	64–19–7	1		5000 (2270)
Acetic acid, (2,4-dichlorophenoxy)-, salts & esters	94–75–7	1,3,4	U240	100 (45.4)
Acetic acid, ethyl ester	141–78–6	4	U112	5000 (2270)
Acetic acid, fluoro-, sodium salt	62–74–8	4	P058	10 (4.54)
Acetic acid, lead(2+) salt	301–04–2	1,4	U144	10 (4.54)
Acetic acid, thallium(1+) salt	563–68–8	4	U214	100 (45.4)
Acetic acid, (2,4,5-trichlorophenoxy)-	93–76–5	1,4	See F027	1000 (454)
Acetic anhydride	108–24–7	1		5000 (2270)
Acetone	67–64–1	4	U002	5000 (2270)
Acetone cyanohydrin	75–86–5	1,4	P069	10 (4.54)
Acetonitrile	75–05–8	3,4	U003	5000 (2270)
Acetophenone	98–86–2	3,4	U004	5000 (2270)
2-Acetylaminofluorene	53–96–3	3,4	U005	1 (0.454)
Acetyl bromide	506–96–7	1		5000 (2270)
Acetyl chloride	75–36–5	1,4	U006	5000 (2270)
1-Acetyl-2-thiourea	591–08–2	4	P002	1000 (454)
Acrolein	107–02–8	1,2,3,4	P003	1 (0.454)
Acrylamide	79–06–1	3,4	U007	5000 (2270)
Acrylic acid	79–10–7	3,4	U008	5000 (2270)
Acrylonitrile	107–13–1	1,2,3,4	U009	100 (45.4)
Adipic acid	124–04–9	1		5000 (2270)
Aldicarb	116–06–3	4	P070	1 (0.454)
Aldicarb sulfone	1646884	4	P203	100 (45.4)
Aldrin	309–00–2	1,2,4	P004	1 (0.454)
Allyl alcohol	107–18–6	1,4	P005	100 (45.4)
Allyl chloride	107–05–1	1,3		1000 (454)
Aluminum phosphide	20859–73–8	4	P006	100 (45.4)
Aluminum sulfate	10043–01–3	1		5000 (2270)
4-Aminobiphenyl	92–67–1	3		1 (0.454)
5-(Aminomethyl)-3-isoxazolol	2763–96–4	4	P007	1000 (454)
4-Aminopyridine	504–24–5	4	P008	1000 (454)
Amitrole	61–82–5	4	U011	10 (4.54)
Ammonia	7664–41–7	1		100 (45.4)
Ammonium acetate	631–61–8	1		5000 (2270)
Ammonium benzoate	1863–63–4	1		5000 (2270)
Ammonium bicarbonate	1066–33–7	1		5000 (2270)
Ammonium bichromate	7789–09–5	1		10 (4.54)
Ammonium bifluoride	1341–49–7	1		100 (45.4)
Ammonium bisulfilte	10192–30–0	1		5000 (2270)
Ammonium carbamate	1111–78–0	1		5000 (2270)
Ammonium carbonate	506–87–6	1		5000 (2270)
Ammonium chloride	12125–02–9	1		5000 (2270)
Ammonium chromate	7788–98–9	1		10 (4.54)
Ammonium citrate, dibasic	3012–65–5	1		5000 (2270)
Ammonium fluoborate	13826–83–0	1		5000 (2270)
Ammonium fluoride	12125–01–8	1		100 (45.4)
Ammonium hydroxide	1336–21–6	1		1000 (454)
Ammonium oxalate	6009–70–7 5972–73–6 14258–49–2	1		5000 (2270)
Ammonium picrate	131–74–8	4	P009	10 (4.54)
Ammonium silicofluoride	16919–19–0	1		1000 (454)
Ammonium sulfamate	7773–06–0	1		5000 (2270)
Ammonium sulfide	12135–76–1	1		100 (45.4)

TABLE 302.4—LIST OF HAZARDOUS SUBSTANCES AND REPORTABLE QUANTITIES—Continued

[Note: All Comments/Notes Are Located at the End of This Table]

Hazardous substance	CASRN	Statutory code†	RCRA waste No.	Final RQ pounds (Kg)
Ammonium sulfite	10196–04–0	1		5000 (2270)
Ammonium tartrate	14307–43–8	1		5000 (2270)
	3164–29–2			
Ammonium thiocyanate	1762–95–4	1		5000 (2270)
Ammonium vanadate	7803–55–6	4	P119	1000 (454)
Amyl acetate	628–63–7	1		5000 (2270)
iso-Amyl acetate	123–92–2			
sec-Amyl acetate	626–38–0			
tert-Amyl acetate	625–16–1			
Aniline	62–53–3	1,3,4	U012	5000 (2270)
o-Anisidine	90–04–0	3		100 (45.4)
Anthracene	120–12–7	2		5000 (2270)
Antimony††	7440–36–0	2		5000 (2270)
ANTIMONY AND COMPOUNDS	N.A.	2,3		**
Antimony Compounds	N.A.	2,3		**
Antimony pentachloride	7647–18–9	1		1000 (454)
Antimony potassium tartrate	28300–74–5	1		100 (45.4)
Antimony tribromide	7789–61–9	1		1000 (454)
Antimony trichloride	10025–91–9	1		1000 (454)
Antimony trifluoride	7783–56–4	1		1000 (454)
Antimony trioxide	1309–64–4	1		1000 (454)
Argentate(1-), bis(cyano-C)-, potassium	506–61–6	4	P099	1 (0.454)
Aroclor 1016	12674–11–2	1,2,3		1 (0.454)
Aroclor 1221	11104–28–2	1,2,3		1 (0.454)
Aroclor 1232	11141–16–5	1,2,3		1 (0.454)
Aroclor 1242	53469–21–9	1,2,3		1 (0.454)
Aroclor 1248	12672–29–6	1,2,3		1 (0.454)
Aroclor 1254	11097–69–1	1,2,3		1 (0.454)
Aroclor 1260	11096–82–5	1,2,3		1 (0.454)
Aroclors	1336–36–3	1,2,3		1 (0.454)
Arsenic††	7440–38–2	2,3		1 (0.454)
Arsenic acid H3AsO4	7778–39–4	4	P010	1 (0.454)
ARSENIC AND COMPOUNDS	N.A.	2,3		**
Arsenic Compounds (inorganic including arsine)	N.A.	2,3		**
Arsenic disulfide	1303–32–8	1		1 (0.454)
Arsenic oxide As2O3	1327–53–3	1,4	P012	1 (0.454)
Arsenic oxide As2O5	1303–28–2	1,4	P011	1 (0.454)
Arsenic pentoxide	1303–28–2	1,4	P011	1 (0.454)
Arsenic trichloride	7784–34–1	1		1 (0.454)
Arsenic trioxide	1327–53–3	1,4	P012	1 (0.454)
Arsenic trisulfide	1303–33–9	1		1 (0.454)
Arsine, diethyl-	692–42–2	4	P038	1 (0.454)
Arsinic acid, dimethyl-	75–60–5	4	U136	1 (0.454)
Arsonous dichloride, phenyl-	696–28–6	4	P036	1 (0.454)
Asbestos†††	1332–21–4	2,3		1 (0.454)
Auramine	492–80–8	4	U014	100 (45.4)
Azaserine	115–02–6	4	U015	1 (0.454)
Aziridine	151–56–4	3,4	P054	1 (0.454)
Aziridine, 2-methyl-	75–55–8	3,4	P067	1 (0.454)
Azirino[2′,3′:3,4]pyrrolo[1,2–a]indole-4,7-dione, 6-amino-8-[[(aminocarbonyl)oxy]methyl]-1,1a,2,8,8a,8b- hexahydro-8a-methoxy-5- methyl-,[1aS- (1aalpha,8beta,8aalpha, 8balpha)]-.	50–07–7	4	U010	10 (4.54)
Barban	101279	4	U280	10 (4.54)
Barium cyanide	542–62–1	1,4	P013	10 (4.54)
Bendiocarb	22781233	4	U278	100 (45.4)
Bendiocarb phenol	22961826	4	U364	1000 (454)
Benomyl	17804352	4	U271	10 (4.54)
Benz[j]aceanthrylene, 1,2-dihydro-3-methyl-	56–49–5	4	U157	10 (4.54)
Benz[c]acridine	225–51–4	4	U016	100 (45.4)
Benzal chloride	98–87–3	4	U017	5000 (2270)
Benzamide, 3,5-dichloro-N-(1,1-dimethyl-2propynyl)-	23950–58–5	4	U192	5000 (2270)
Benz[a]anthracene	56–55–3	2,4	U018	10 (4.54)
1,2-Benzanthracene	56–55–3	2,4	U018	10 (4.54)
Benz[a]anthracene, 7,12-dimethyl-	57–97–6	4	U094	1 (0.454)
Benzenamine	62–53–3	1,3,4	U012	5000 (2270)
Benzenamine, 4,4′-carbonimidoylbis (N,N dimethyl-	492–80–8	4	U014	100 (45.4)
Benzenamine, 4-chloro-	106–47–8	4	P024	1000 (454)
Benzenamine, 4-chloro-2-methyl-, hydrochloride	3165–93–3	4	U049	100 (45.4)

TABLE 302.4—LIST OF HAZARDOUS SUBSTANCES AND REPORTABLE QUANTITIES—Continued

[Note: All Comments/Notes Are Located at the End of This Table]

Hazardous substance	CASRN	Statutory code†	RCRA waste No.	Final RQ pounds (Kg)
Benzenamine, N,N-dimethyl-4-(phenylazo)-	60–11–7	3,4	U093	10 (4.54)
Benzenamine, 2-methyl-	95–53–4	3,4	U328	100 (45.4)
Benzenamine, 4-methyl-	106–49–0	4	U353	100 (45.4)
Benzenamine, 4,4′-methylenebis [2-chloro-	101–14–4	3,4	U158	10 (4.54)
Benzenamine, 2-methyl-,hydrochloride	636–21–5	4	U222	100 (45.4)
Benzenamine, 2-methyl-5-nitro-	99–55–8	4	U181	100 (45.4)
Benzenamine, 4-nitro-	100–01–6	4	P077	5000 (2270)
Benzene [a]	71–43–2	1,2,3,4	U019	10 (4.54)
Benzeneacetic acid, 4-chloro-α-(4-chlorophenyl)-α-hydroxy-, ethyl ester.	510–15–6	3,4	U038	10 (4.54)
Benzene, 1-bromo-4-phenoxy-	101–55–3	2,4	U030	100 (45.4)
Benzenebutanoic acid, 4-[bis(2- chloroethyl)amino]-	305–03–3	4	U035	10 (4.54)
Benzene, chloro-	108–90–7	1,2,3,4	U037	100 (45.4)
Benzene, (chloromethyl)-	100–44–7	1,3,4	P028	100 (45.4)
Benzenediamine, ar-methyl-	95–80–7 496–72–0 823–40–5 25376–45–8	3,4	U221	10 (4.54)
1,2-Benzenedicarboxylic acid, bis(2-ethylhexyl) ester	117–81–7	2,3,4	U028	100 (45.4)
1,2-Benzenedicarboxylic acid, dibutyl ester	84–74–2	1,2,3,4	U069	10 (4.54)
1,2-Benzenedicarboxylic acid, diethyl ester	84–66–2	2,4	U088	1000 (454)
1,2-Benzenedicarboxylic acid, dimethyl ester	131–11–3	2,3,4	U102	5000 (2270)
1,2-Benzenedicarboxylic acid, dioctyl ester	117–84–0	2,4	U107	5000 (2270)
Benzene, 1,2-dichloro-	95–50–1	1,2,4	U070	100 (45.4)
Benzene, 1,3-dichloro-	541–73–1	2,4	U071	100 (45.4)
Benzene, 1,4-dichloro-	106–46–7	1,2,3,4	U072	100 (45.4)
Benzene, 1,1′-(2,2-dichloroethylidene) bis[4-chloro-	72–54–8	1,2,4	U060	1 (0.454)
Benzene, (dichloromethyl)-	98–87–3	4	U017	5000 (2270)
Benzene, 1,3-diisocyanatomethyl-	91–08–7 584–84–9 26471–62–5	3,4	U223	100 (45.4)
Benzene, dimethyl-	1330–20–7	1,3,4	U239	100 (45.4)
1,3-Benzenediol	108–46–3	1,4	U201	5000 (2270)
1,2-Benzenediol,4-[1-hydroxy-2-(methyl amino)ethyl]-	51–43–4	4	P042	1000 (454)
Benzeneethanamine, alpha,alpha-dimethyl-	122–09–8	4	P046	5000 (2270)
Benzene, hexachloro-	118–74–1	2,3,4	U127	10 (4.54)
Benzene, hexahydro-	110–82–7	1,4	U056	1000 (454)
Benzene, methyl-	108–88–3	1,2,3,4	U220	1000 (454)
Benzene, 1-methyl-2,4-dinitro-	121–14–2	1,2,3,4	U105	10 (4.54)
Benzene, 2-methyl-1,3-dinitro-	606–20–2	1,2,4	U106	100 (45.4)
Benzene, (1-methylethyl)-	98–82–8	3,4	U055	5000 (2270)
Benzene, nitro-	98–95–3	1,2,3,4	U169	1000 (454)
Benzene, pentachloro-	608–93–5	4	U183	10 (4.54)
Benzene, pentachloronitro-	82–68–8	3,4	U185	100 (45.4)
Benzenesulfonic acid chloride	98–09–9	4	U020	100 (45.4)
Benzenesulfonyl chloride	98–09–9	4	U020	100 (45.4)
Benzene,1,2,4,5-tetrachloro-	95–94–3	4	U207	5000 (2270)
Benzenethiol	108–98–5	4	P014	100 (45.4)
Benzene,1,1′-(2,2,2-trichloroethylidene) bis[4-chloro-	50–29–3	1,2,4	U061	1 (0.454)
Benzene,1,1′-(2,2,2-trichloroethylidene) bis[4-methoxy-	72–43–5	1,3,4	U247	1 (0.454)
Benzene, (trichloromethyl)-	98–07–7	3,4	U023	10 (4.54)
Benzene, 1,3,5-trinitro-	99–35–4	4	U234	10 (4.54)
Benzidine	92–87–5	2,3,4	U021	1 (0.454)
Benzo[a]anthracene	56–55–3	2,4	U018	10 (4.54)
1,3-Benzodioxole, 5-(1-propenyl)-1	120–58–1	4	U141	100 (45.4)
1,3-Benzodioxole, 5-(2-propenyl)-	94–59–7	4	U203	100 (45.4)
1,3-Benzodioxole, 5-propyl-	94–58–6	4	U090	10 (4.54)
1,3-Benzodioxol-4-ol, 2,2-dimethyl-	22961826	4	U364	1000 (454)
1,3-Benzodioxol-4-ol, 2,2-dimethyl-, methyl carbamate	22781233	4	U278	100 (45.4)
Benzo[b]fluoranthene	205–99–2	2		1 (0.454)
Benzo(k)fluoranthene	207–08–9	2		5000 (2270)
7-Benzofuranol, 2,3-dihydro-2,2-dimethyl-	1563388	4	U367	10 (4.54)
7-Benzofuranol, 2,3-dihydro-2,2- dimethyl-, methylcarbamate.	1563–66–2	1,4	P127	10 (4.54)
Benzoic acid	65–85–0	1		5000 (2270)
Benzoic acid, 2-hydroxy-, compd. with (3aS-cis)-1,2,3,3a,8,8a-hexahydro-1,3a,8-trimethylpyrrolo[2,3-b]indol-5-yl methylcarbamate ester (1:1).	57647	4	P188	100 (45.4)
Benzonitrile	100–47–0	1		5000 (2270)

TABLE 302.4—LIST OF HAZARDOUS SUBSTANCES AND REPORTABLE QUANTITIES—Continued

[Note: All Comments/Notes Are Located at the End of This Table]

Hazardous substance	CASRN	Statutory code†	RCRA waste No.	Final RQ pounds (Kg)
Benzo[rst]pentaphene	189–55–9	4	U064	10 (4.54)
Benzo[ghi]perylene	191–24–2	2		5000 (2270)
2H-1-Benzopyran-2-one, 4-hydroxy-3-(3-oxo-1-phenylbutyl)-, & salts.	81–81–2	4	P001 U248	100 (45.4)
Benzo[a]pyrene	50–32–8	2,4	U022	1 (0.454)
3,4-Benzopyrene	50–32–8	2,4	U022	1 (0.454)
ρ-Benzoquinone	106–51–4	3,4	U197	10 (4.54)
Benzotrichloride	98–07–7	3,4	U023	10 (4.54)
Benzoyl chloride	98–88–4	1		1000 (454)
Benzyl chloride	100–44–7	1,3,4	P028	100 (45.4)
Beryllium ††	7440–41–7	2,3,4	P015	10 (4.54)
BERYLLIUM AND COMPOUNDS	N.A.	2,3		**
Beryllium chloride	7787–47–5	1		1 (0.454)
Beryllium compounds	N.A.	2,3		**
Beryllium fluoride	7787–49–7	1		1 (0.454)
Beryllium nitrate	13597–99–4 7787–55–5	1		1 (0.454)
Beryllium powder ††	7440–41–7	2,3,4	P015	10 (4.54)
alpha-BHC	319–84–6	2		10 (4.54)
beta-BHC	319–85–7	2		1 (0.454)
delta-BHC	319–86–8	2		1 (0.454)
gamma-BHC	58–89–9	1,2,3,4	U129	1 (0.454)
2,2′-Bioxirane	1464–53–5	4	U085	10 (4.54)
Biphenyl	92–52–4	3		100 (45.4)
[1,1′-Biphenyl]-4,4′-diamine	92–87–5	2,3,4	U021	1 (0.454)
[1,1′-Biphenyl]-4,4′-diamine,3,3′-dichloro-	91–94–1	2,3,4	U073	1 (0.454)
[1,1′-Biphenyl]-4,4′-diamine,3,3′-dimethoxy-	119–90–4	3,4	U091	100 (45.4)
[1,1′-Biphenyl]-4,4′-diamine,3,3′-dimethyl-	119–93–7	3,4	U095	10 (4.54)
Bis(2-chloroethoxy) methane	111–91–1	2,4	U024	1000 (454)
Bis(2-chloroethyl) ether	111–44–4	2,3,4	U025	10 (4.54)
Bis(chloromethyl) ether	542–88–1	2,3,4	P016	10 (4.54)
Bis(2-ethylhexyl) phthalate	117–81–7	3,4	U028	100 (45.4)
Bromoacetone	598–31–2	4	P017	1000 (454)
Bromoform	75–25–2	2,3,4	U225	100 (45.4)
Bromomethane	74–83–9	2,3,4	U029	1000 (454)
4-Bromophenyl phenyl ether	101–55–3	2,4	U030	100 (45.4)
Brucine	357–57–3	4	P018	100 (45.4)
1,3-Butadiene	106–99–0	3		10 (4.54)
1,3-Butadiene, 1,1,2,3,4,4-hexachloro-	87–68–3	2,3,4	U128	1 (0.454)
1-Butanamine, N-butyl-N-nitroso-	924–16–3	4	U172	10 (4.54)
1-Butanol	71–36–3	4	U031	5000 (2270)
2-Butanone	78–93–3	3,4	U159	5000 (2270)
2-Butanone, 3,3-dimethyl-1(methylthio)-, O-[(methylamino)carbonyl] oxime.	39196–18–4	4	P045	100 (45.4)
2-Butanone peroxide	1338–23–4	4	U160	10 (4.54)
2-Butenal	123–73–9 4170–30–3	1,4	U053	100 (45.4)
2-Butene, 1,4-dichloro-	764–41–0	4	U074	1 (0.454)
2-Butenoic acid, 2-methyl-, 7-[[2,3-dihydroxy-2-(1-methoxyethyl)-3- methyl-1-oxobutoxy] methyl]-2,3, 5,7a-tetrahydro- 1H-pyrrolizin-1-yl ester, [1S-[1alpha(Z), 7(2S*,3R*),7aalpha]]-.	303–34–4	4	U143	10 (4.54)
Butyl acetate	123–86–4	1		5000 (2270)
iso-Butyl acetate	110–19–0			
sec-Butyl acetate	105–46–4			
tert-Butyl acetate	540–88–5			
n-Butyl alcohol	71–36–3	4	U031	5000 (2270)
Butylamine	109–73–9	1		1000 (454)
iso-Butylamine	78–81–9			
sec-Butylamine	513–49–5 13952–84–6			
tert-Butylamine	75–64–9			
Butyl benzyl phthalate	85–68–7	2		100 (45.4)
n-Butyl phthalate	84–74–2	1,2,3,4	U069	10 (4.54)
Butyric acid	107–92–6	1		5000 (2270)
iso-Butyric acid	79–31–2			
Cacodylic acid	75–60–5	4	U136	1 (0.454)
Cadmium ††	7440–43–9	2		10 (4.54)
Cadmium acetate	543–90–8	1		10 (4.54)

TABLE 302.4—LIST OF HAZARDOUS SUBSTANCES AND REPORTABLE QUANTITIES—Continued

[Note: All Comments/Notes Are Located at the End of This Table]

Hazardous substance	CASRN	Statutory code†	RCRA waste No.	Final RQ pounds (Kg)
CADMIUM AND COMPOUNDS	N.A.	2,3		**
Cadmium bromide	7789–42–6	1		10 (4.54)
Cadmium chloride	10108–64–2	1		10 (4.54)
Cadmium compounds	N.A.	2,3		**
Calcium arsenate	7778–44–1	1		1 (0.454)
Calcium arsenite	52740–16–6	1		1 (0.454)
Calcium carbide	75–20–7	1		10 (4.54)
Calcium chromate	13765–19–0	1,4	U032	10 (4.54)
Calcium cyanamide	156–62–7	3		1000 (454)
Calcium cyanide Ca(CN)2	592–01–8	1,4	P021	10 (4.54)
Calcium dodecylbenzenesulfonate	26264–06–2	1		1000 (454)
Calcium hypochlorite	7778–54–3	1		10 (4.54)
Captan	133–06–2	1,3		10 (4.54)
Carbamic acid, 1H-benzimidazol-2-yl, methyl ester	10605217	4	U372	10 (4.54)
Carbamic acid, [1-[(butylamino)carbonyl]-1H-benzimidazol-2-yl]-,methyl ester.	17804352	4	U271	10 (4.54)
Carbamic acid, (3-chlorophenyl)-, 4-chloro-2-butynyl ester	101279	4	U280	10 (4.54)
Carbamic acid, [(dibutylamino)-thio]methyl-, 2,3-dihydro-2,2-dimethyl-7-benzofuranyl ester.	55285148	4	P189	1000 (454)
Carbamic acid, dimethyl-,1-[(dimethyl-amino)carbonyl]-5-methyl-1H-pyrazol-3-yl ester.	644644	4	P191	1 (0.454)
Carbamic acid, dimethyl-, 3-methyl-1-(1-methylethyl)-1H-pyrazol-5-yl ester.	119380	4	P192	100 (45.4)
Carbamic acid, ethyl ester	51–79–6	3,4	U238	100 (45.4)
Carbamic acid, methyl-, 3-methylphenyl ester	1129415	4	P190	1000 (454)
Carbamic acid, methylnitroso-, ethyl ester	615–53–2	4	U178	1 (0.454)
Carbamic acid, [1,2-phenylenebis(iminocarbonothioyl)]bis-, dimethyl ester.	23564058	4	U409	10 (4.54)
Carbamic acid, phenyl-, 1-methylethyl ester	122429	4	U373	1000 (454)
Carbamic chloride, dimethyl-	79–44–7	3,4	U097	1 (0.454)
Carbamodithioic acid, 1,2-ethanediylbis-, salts & esters	111–54–6	4	U114	5000 (2270)
Carbamothioic acid, bis(1-methylethyl)-, S-(2,3-dichloro-2-propenyl) ester.	2303–16–4	4	U062	100 (45.4)
Carbamothioic acid, bis(1-methylethyl)-, S-(2,3,3-trichloro-2-propenyl) ester.	2303175	4	U389	100 (45.4)
Carbamothioic acid, dipropyl-, S-(phenylmethyl) ester	52888809	4	U387	5000 (2270)
Carbaryl	63–25–2	1,3,4	U279	100 (45.4)
Carbendazim	10605217	4	U372	10 (4.54)
Carbofuran	1563–66–2	1,4	P127	10 (4.54)
Carbofuran phenol	1563388	4	U367	10 (4.54)
Carbon disulfide	75–15–0	1,3,4	P022	100 (45.4)
Carbonic acid, dithallium(1+) salt	6533–73–9	4	U215	100 (45.4)
Carbonic dichloride	75–44–5	1,3,4	P095	10 (4.54)
Carbonic difluoride	353–50–4	4	U033	1000 (454)
Carbonochloridic acid, methyl ester	79–22–1	4	U156	1000 (454)
Carbon oxyfluoride	353–50–4	4	U033	1000 (454)
Carbon tetrachloride	56–23–5	1,2,3,4	U211	10 (4.54)
Carbonyl sulfide	463–58–1	3		100 (45.4)
Carbosulfan	55285148	4	P189	1000 (454)
Catechol	120–80–9	3		100 (45.4)
Chloral	75–87–6	4	U034	5000 (2270)
Chloramben	133–90–4	3		100 (45.4)
Chlorambucil	305–03–3	4	U035	10 (4.54)
Chlordane	57–74–9	1,2,3,4	U036	1 (0.454)
Chlordane, alpha & gamma isomers	57–74–9	1,2,3,4	U036	1 (0.454)
CHLORDANE (TECHNICAL MIXTURE AND METABOLITES).	57–74–9	1,2,3,4	U036	1 (0.454)
CHLORINATED BENZENES	N.A.	2		**
Chlorinated camphene	8001–35–2	1,2,3,4	P123	1 (0.454)
CHLORINATED ETHANES	N.A.	2		**
CHLORINATED NAPHTHALENE	N.A.	2		**
CHLORINATED PHENOLS	N.A.	2		**
Chlorine	7782–50–5	1,3		10 (4.54)
Chlornaphazine	494–03–1	4	U026	100 (45.4)
Chloroacetaldehyde	107–20–0	4	P023	1000 (454)
Chloroacetic acid	79–11–8	3		100 (45.4)
2-Chloroacetophenone	532–27–4	3		100 (45.4)
CHLOROALKYL ETHERS	N.A.	2		**
p-Chloroaniline	106–47–8	4	P024	1000 (454)

TABLE 302.4—LIST OF HAZARDOUS SUBSTANCES AND REPORTABLE QUANTITIES—Continued

[Note: All Comments/Notes Are Located at the End of This Table]

Hazardous substance	CASRN	Statutory code†	RCRA waste No.	Final RQ pounds (Kg)
Chlorobenzene	108–90–7	1,2,3,4	U037	100 (45.4)
Chlorobenzilate	510–15–6	3,4	U038	10 (4.54)
p-Chloro-m-cresol	59–50–7	2,4	U039	5000 (2270)
Chlorodibromomethane	124–48–1	2		100 (45.4)
1-Chloro-2,3-epoxypropane	106–89–8	1,3,4	U041	100 (45.4)
Chloroethane	75–00–3	2,3		100 (45.4)
2-Chloroethyl vinyl ether	110–75–8	2,4	U042	1000 (454)
Chloroform	67–66–3	1,2,3,4	U044	10 (4.54)
Chloromethane	74–87–3	2,3,4	U045	100 (45.4)
Chloromethyl methyl ether	107–30–2	3,4	U046	10 (4.54)
beta-Chloronaphthalene	91–58–7	2,4	U047	5000 (2270)
2-Chloronaphthalene	91–58–7	2,4	U047	5000 (2270)
2-Chlorophenol	95–57–8	2,4	U048	100 (45.4)
o-Chlorophenol	95–57–8	2,4	U048	100 (45.4)
4-Chlorophenyl phenyl ether	7005–72–3	2		5000 (2270)
1-(o-Chlorophenyl)thiourea	5344–82–1	4	P026	100 (45.4)
Chloroprene	126–99–8	3		100 (45.4)
3-Chloropropionitrile	542–76–7	4	P027	1000 (454)
Chlorosulfonic acid	7790–94–5	1		1000 (454)
4-Chloro-o-toluidine, hydrochloride	3165–93–3	4	U049	100 (45.4)
Chlorpyrifos	2921–88–2	1		1 (0.454)
Chromic acetate	1066–30–4	1		1000 (454)
Chromic acid	11115–74–5 7738–94–5	1		10 (4.54)
Chromic acid H2CrO4, calcium salt	13765–19–0	1,4	U032	10 (4.54)
Chromic sulfate	10101–53–8	1		1000 (454)
Chromium ††	7440–47–3	2		5000 (2270)
CHROMIUM AND COMPOUNDS	N.A.	2,3		**
Chromium Compounds	N.A.	2,3		**
Chromous chloride	10049–05–5	1		1000 (454)
Chrysene	218–01–9	2,4	U050	100 (45.4)
Cobalt Compounds	N.A.	3		**
Cobaltous bromide	7789–43–7	1		1000 (454)
Cobaltous formate	544–18–3	1		1000 (454)
Cobaltous sulfamate	14017–41–5	1		1000 (454)
Coke Oven Emissions	N.A.	3		1 (0.454)
Copper ††	7440–50–8	2		5000 (2270)
COPPER AND COMPOUNDS	N.A.	2		**
Copper cyanide Cu(CN)	544–92–3	4	P029	10 (4.54)
Coumaphos	56–72–4	1		10 (4.54)
Creosote	N.A.	4	U051	1 (0.454)
Cresol (cresylic acid)	1319–77–3	1,3,4	U052	100 (45.4)
m-Cresol	108–39–4	3		100 (45.4)
o-Cresol	95–48–7	3		100 (45.4)
p-Cresol	106–44–5	3		100 (45.4)
Cresols (isomers and mixture)	1319–77–3	1,3,4	U052	100 (45.4)
Cresylic acid (isomers and mixture)	1319–77–3	1,3,4	U052	100 (45.4)
Crotonaldehyde	123–73–9 4170–30–3	1,4	U053	100 (45.4)
Cumene	98–82–8	3,4	U055	5000 (2270)
m-Cumenyl methylcarbamate	64006	4	P202	10 (4.54)
Cupric acetate	142–71–2	1		100 (45.4)
Cupric acetoarsenite	12002–03–8	1		1 (0.454)
Cupric chloride	7447–39–4	1		10 (4.54)
Cupric nitrate	3251–23–8	1		100 (45.4)
Cupric oxalate	5893–66–3	1		100 (45.4)
Cupric sulfate	7758–98–7	1		10 (4.54)
Cupric sulfate, ammoniated	10380–29–7	1		100 (45.4)
Cupric tartrate	815–82–7	1		100 (45.4)
Cyanide Compounds	N.A.	2,3		**
CYANIDES	N.A.	2,3		**
Cyanides (soluble salts and complexes) not otherwise specified.	N.A.	4	P030	10 (4.54)
Cyanogen	460–19–5	4	P031	100 (45.4)
Cyanogen bromide (CN)Br	506–68–3	4	U246	1000 (454)
Cyanogen chloride (CN)Cl	506–77–4	1,4	P033	10 (4.54)
2,5-Cyclohexadiene-1,4-dione	106–51–4	3,4	U197	10 (4.54)
Cyclohexane	110–82–7	1,4	U056	1000 (454)
Cyclohexane, 1,2,3,4,5,6-hexachloro-, (1α, 2α, 3β–, 4α, 5α, 6β).	58–89–9	1,2,3,4	U129	1 (0.454)

TABLE 302.4—LIST OF HAZARDOUS SUBSTANCES AND REPORTABLE QUANTITIES—Continued

[Note: All Comments/Notes Are Located at the End of This Table]

Hazardous substance	CASRN	Statutory code†	RCRA waste No.	Final RQ pounds (Kg)
Cyclohexanone	108–94–1	4	U057	5000 (2270)
2-Cyclohexyl-4,6-dinitrophenol	131–89–5	4	P034	100 (45.4)
1,3-Cyclopentadiene, 1,2,3,4,5,5-hexachloro-	77–47–4	1,2,3,4	U130	10 (4.54)
Cyclophosphamide	50–18–0	4	U058	10 (4.54)
2,4-D Acid	94–75–7	1,3,4	U240	100 (45.4)
2,4-D Ester	94–11–1	1		100 (45.4)
	94–79–1			
	94–80–4			
	1320–18–9			
	1928–38–7			
	1928–61–6			
	1929–73–3			
	2971–38–2			
	25168–26–7			
	53467–11–1			
2,4-D, salts and esters	94–75–7	1,3,4	U240	100 (45.4)
Daunomycin	20830–81–3	4	U059	10 (4.54)
DDD	72–54–8	1,2,4	U060	1 (0.454)
4,4′-DDD	72–54–8	1,2,4	U060	1 (0.454)
DDE [b]	72–55–9	2		1 (0.454)
DDE [b]	3547–04–4	3		5000 (2270)
4,4′-DDE	72–55–9	2		1 (0.454)
DDT	50–29–3	1,2,4	U061	1 (0.454)
4,4′-DDT	50–29–3	1,2,4	U061	1 (0.454)
DDT AND METABOLITES	N.A.	2		**
DEHP	117–81–7	2,3,4	U028	100 (45.4)
Diallate	2303–16–4	4	U062	100 (45.4)
Diazinon	333–41–5	1		1 (0.454)
Diazomethane	334–88–3	3		100 (45.4)
Dibenz[a,h]anthracene	53–70–3	2,4	U063	1 (0.454)
1,2:5,6-Dibenzanthracene	53–70–3	2,4	U063	1 (0.454)
Dibenzo[a,h]anthracene	53–70–3	2,4	U063	1 (0.454)
Dibenzofuran	132–64–9	3		100 (45.4)
Dibenzo[a,i]pyrene	189–55–9	4	U064	10 (4.54)
1,2-Dibromo-3-chloropropane	96–12–8	3,4	U066	1 (0.454)
Dibromoethane	106–93–4	1,3,4	U067	1 (0.454)
Dibutyl phthalate	84–74–2	1,2,3,4	U069	10 (4.54)
Di-n-butyl phthalate	84–74–2	1,2,3,4	U069	10 (4.54)
Dicamba	1918–00–9	1		1000 (454)
Dichlobenil	1194–65–6	1		100 (45.4)
Dichlone	117–80–6	1		1 (0.454)
Dichlorobenzene	25321–22–6	1		100 (45.4)
1,2-Dichlorobenzene	95–50–1	1,2,4	U070	100 (45.4)
1,3-Dichlorobenzene	541–73–1	2,4	U071	100 (45.4)
1,4-Dichlorobenzene	106–46–7	1,2,3,4	U072	100 (45.4)
m-Dichlorobenzene	541–73–1	2,4	U071	100 (45.4)
o-Dichlorobenzene	95–50–1	1,2,4	U070	100 (45.4)
p-Dichlorobenzene	106–46–7	1,2,3,4	U072	100 (45.4)
DICHLOROBENZIDINE	N.A.	2		**
3,3′-Dichlorobenzidine	91–94–1	2,3,4	U073	1 (0.454)
Dichlorobromomethane	75–27–4	2		5000 (2270)
1,4-Dichloro-2-butene	764–41–0	4	U074	1 (0.454)
Dichlorodifluoromethane	75–71–8	4	U075	5000 (2270)
1,1-Dichloroethane	75–34–3	2,3,4	U076	1000 (454)
1,2-Dichloroethane	107–06–2	1,2,3,4	U077	100 (45.4)
1,1-Dichloroethylene	75–35–4	1,2,3,4	U078	100 (45.4)
1,2-Dichloroethylene	156–60–5	2,4	U079	1000 (454)
Dichloroethyl ether	111–44–4	2,3,4	U025	10 (4.54)
Dichloroisopropyl ether	108–60–1	2,4	U027	1000 (454)
Dichloromethane	75–09–2	2,3,4	U080	1000 (454)
Dichloromethoxyethane	111–91–1	2,4	U024	1000 (454)
Dichloromethyl ether	542–88–1	2,3,4	P016	10 (4.54)
2,4-Dichlorophenol	120–83–2	2,4	U081	100 (45.4)
2,6-Dichlorophenol	87–65–0	4	U082	100 (45.4)
Dichlorophenylarsine	696–28–6	4	P036	1 (0.454)
Dichloropropane	26638–19–7	1		1000 (454)
1,1-Dichloropropane	78–99–9			
1,3-Dichloropropane	142–28–9			
1,2-Dichloropropane	78–87–5	1,2,3,4	U083	1000 (454)

TABLE 302.4—LIST OF HAZARDOUS SUBSTANCES AND REPORTABLE QUANTITIES—Continued

[Note: All Comments/Notes Are Located at the End of This Table]

Hazardous substance	CASRN	Statutory code†	RCRA waste No.	Final RQ pounds (Kg)
Dichloropropane—Dichloropropene (mixture)	8003–19–8	1		100 (45.4)
Dichloropropene	26952–23–8	1		100 (45.4)
2,3-Dichloropropene	78–88–6			
1,3-Dichloropropene	542–75–6	1,2,3,4	U084	100 (45.4)
2,2-Dichloropropionic acid	75–99–0	1		5000 (2270)
Dichlorvos	62–73–7	1,3		10 (4.54)
Dicofol	115–32–2	1		10 (4.54)
Dieldrin	60–57–1	1,2,4	P037	1 (0.454)
1,2:3,4-Diepoxybutane	1464–53–5	4	U085	10 (4.54)
Diethanolamine	111–42–2	3		100 (45.4)
Diethylamine	109–89–7	1		100 (45.4)
N,N-Diethylaniline	91–66–7	3		1000 (454)
Diethylarsine	692–42–2	4	P038	1 (0.454)
1,4-Diethyleneoxide	123–91–1	3,4	U108	100 (45.4)
Diethylene glycol, dicarbamate	5952261	4	U395	5000 (2270)
Diethylhexyl phthalate	117–81–7	2,3,4	U028	100 (45.4)
N,N′-Diethylhydrazine	1615–80–1	4	U086	10 (4.54)
O,O-Diethyl S-methyl dithiophosphate	3288–58–2	4	U087	5000 (2270)
Diethyl-p-nitrophenyl phosphate	311–45–5	4	P041	100 (45.4)
Diethyl phthalate	84–66–2	2,4	U088	1000 (454)
O,O-Diethyl O-pyrazinyl phosphorothioate	297–97–2	4	P040	100 (45.4)
Diethylstilbestrol	56–53–1	4	U089	1 (0.454)
Diethyl sulfate	64–67–5	3		10 (4.54)
Dihydrosafrole	94–58–6	4	U090	10 (4.54)
Diisopropylfluorophosphate (DFP)	55–91–4	4	P043	100 (45.4)
1,4:5,8-Dimethanonaphthalene, 1,2,3,4,10,10-hexachloro-1,4,4a,5,8,8a-hexahydro-, (1alpha,4alpha,4abeta,5alpha, 8alpha,8abeta)-.	309–00–2	1,2,4	P004	1 (0.454)
1,4:5,8-Dimethanonaphthalene, 1,2,3,4,10,10-hexachloro-1,4,4a,5,8,8a-hexahydro-, (1alpha,4alpha,4abeta, 5beta,8beta,8abeta)-.	465–73–6	4	P060	1 (0.454)
2,7:3,6-Dimethanonaphth[2,3- b]oxirene,3,4,5,6,9,9-hexachloro-1a,2,2a,3,6,6a,7,7a- octahydro-,(1aalpha,2beta, 2aalpha,3beta,6beta,6aalpha, 7beta,7aalpha)-.	60–57–1	1,2,4	P037	1 (0.454)
2,7:3,6-Dimethanonaphth[2, 3-b]oxirene,3,4,5,6,9,9-hexachloro-1a,2,2a,3,6,6a,7,7a- octahydro-,(1aalpha,2beta, 2abeta,3alpha,6alpha, 6abeta,7beta,7aalpha)-, & metabolites.	72–20–8	1,2,4	P051	1 (0.454)
Dimethoate	60–51–5	4	P044	10 (4.54)
3,3′-Dimethoxybenzidine	119–90–4	3,4	U091	100 (45.4)
Dimethylamine	124–40–3	1,4	U092	1000 (454)
Dimethyl aminoazobenzene	60–11–7	3,4	U093	10 (4.54)
p-Dimethylaminoazobenzene	60–11–7	3,4	U093	10 (4.54)
N,N-Dimethylaniline	121–69–7	3		100 (45.4)
7,12-Dimethylbenz[a]anthracene	57–97–6	4	U094	1 (0.454)
3,3′-Dimethylbenzidine	119–93–7	3,4	U095	10 (4.54)
alpha,alpha-Dimethylbenzylhydroperoxide	80–15–9	4	U096	10 (4.54)
Dimethylcarbamoyl chloride	79–44–7	3,4	U097	1 (0.454)
Dimethylformamide	68–12–2	3		100 (45.4)
1,1-Dimethylhydrazine	57–14–7	3,4	U098	10 (4.54)
1,2-Dimethylhydrazine	540–73–8	4	U099	1 (0.454)
alpha,alpha-Dimethylphenethylamine	122–09–8	4	P046	5000 (2270)
2,4-Dimethylphenol	105–67–9	2,4	U101	100 (45.4)
Dimethyl phthalate	131–11–3	2,3,4	U102	5000 (2270)
Dimethyl sulfate	77–78–1	3,4	U103	100 (45.4)
Dimetilan	644644	4	P191	1 (0.454)
Dinitrobenzene (mixed)	25154–54–5	1		100 (45.4)
m-Dinitrobenzene	99–65–0			
o-Dinitrobenzene	528–29–0			
p-Dinitrobenzene	100–25–4			
4,6-Dinitro-o-cresol, and salts	534–52–1	2,3,4	P047	10 (4.54)
Dinitrophenol	25550–58–7	1		10 (4.54)
2,5-Dinitrophenol	329–71–5			
2,6-Dinitrophenol	573–56–8			
2,4-Dinitrophenol	51–28–5	1,2,3,4	P048	10 (4.54)
Dinitrotoluene	25321–14–6	1,2		10 (4.54)
3,4-Dinitrotoluene	610–39–9			
2,4-Dinitrotoluene	121–14–2	1,2,3,4	U105	10 (4.54)

TABLE 302.4—LIST OF HAZARDOUS SUBSTANCES AND REPORTABLE QUANTITIES—Continued

[Note: All Comments/Notes Are Located at the End of This Table]

Hazardous substance	CASRN	Statutory code†	RCRA waste No.	Final RQ pounds (Kg)
2,6-Dinitrotoluene	606–20–2	1,2,4	U106	100 (45.4)
Dinoseb	88–85–7	4	P020	1000 (454)
Di-n-octyl phthalate	117–84–0	2,4	U107	5000 (2270)
1,4-Dioxane	123–91–1	3,4	U108	100 (45.4)
DIPHENYLHYDRAZINE	N.A.	2		**
1,2-Diphenylhydrazine	122–66–7	2,3,4	U109	10 (4.54)
Diphosphoramide, octamethyl-	152–16–9	4	P085	100 (45.4)
Diphosphoric acid, tetraethyl ester	107–49–3	1,4	P111	10 (4.54)
Dipropylamine	142–84–7	4	U110	5000 (2270)
Di-n-propylnitrosamine	621–64–7	2,4	U111	10 (4.54)
Diquat	85–00–7 2764–72–9	1		1000 (454)
Disulfoton	298–04–4	1,4	P039	1 (0.454)
Dithiobiuret	541–53–7	4	P049	100 (45.4)
1,3-Dithiolane-2-carboxaldehyde, 2,4-dimethyl-, O-[(methylamino)-carbonyl]oxime.	26419738	4	P185	100 (45.4)
Diuron	330–54–1	1		100 (45.4)
Dodecylbenzenesulfonic acid	27176–87–0	1		1000 (454)
Endosulfan	115–29–7	1,2,4	P050	1 (0.454)
alpha-Endosulfan	959–98–8	2		1 (0.454)
beta-Endosulfan	33213–65–9	2		1 (0.454)
ENDOSULFAN AND METABOLITES	N.A.	2		**
Endosulfan sulfate	1031–07–8	2		1 (0.454)
Endothall	145–73–3	4	P088	1000 (454)
Endrin	72–20–8	1,2,4	P051	1 (0.454)
Endrin aldehyde	7421–93–4	2		1 (0.454)
ENDRIN AND METABOLITES	N.A.	2		**
Endrin, & metabolites	72–20–8	1,2,4	P051	1 (0.454)
Epichlorohydrin	106–89–8	1,3,4	U041	100 (45.4)
Epinephrine	51–43–4	4	P042	1000 (454)
1,2-Epoxybutane	106–88–7	3		100 (45.4)
Ethanal	75–07–0	1,3,4	U001	1000 (454)
Ethanamine, N,N-diethyl-	121–44–8	1,3,4	U404	5000 (2270)
Ethanamine, N-ethyl-N-nitroso-	55–18–5	4	U174	1 (0.454)
1,2-Ethanediamine, N,N-dimethyl-N′-2- pyridinyl-N′-(2-thienylmethyl)-.	91–80–5	4	U155	5000 (2270)
Ethane, 1,2-dibromo-	106–93–4	1,3,4	U067	1 (0.454)
Ethane, 1,1-dichloro-	75–34–3	2,3,4	U076	1000 (454)
Ethane, 1,2-dichloro-	107–06–2	1,2,3,4	U077	100 (45.4)
Ethanedinitrile	460–19–5	4	P031	100 (45.4)
Ethane, hexachloro-	67–72–1	2,3,4	U131	100 (45.4)
Ethane, 1,1′-[methylenebis(oxy)]bis[2- chloro-	111–91–1	2,4	U024	1000 (454)
Ethane, 1,1′-oxybis-	60–29–7	4	U117	100 (45.4)
Ethane, 1,1′-oxybis[2-chloro-	111–44–4	2,3,4	U025	10 (4.54)
Ethane, pentachloro-	76–01–7	4	U184	10 (4.54)
Ethane, 1,1,1,2-tetrachloro-	630–20–6	4	U208	100 (45.4)
Ethane, 1,1,2,2-tetrachloro-	79–34–5	2,3,4	U209	100 (45.4)
Ethanethioamide	62–55–5	4	U218	10 (4.54)
Ethane, 1,1,1-trichloro-	71–55–6	2,3,4	U226	1000 (454)
Ethane, 1,1,2-trichloro-	79–00–5	2,3,4	U227	100 (45.4)
Ethanimidothioic acid, 2-(dimethylamino)-N-hydroxy-2-oxo-, methyl ester.	30558431	4	U394	5000 (2270)
Ethanimidothioic acid, 2-(dimethylamino)-N-[[(methylamino)carbonyl]oxy]-2-oxo-, methyl ester.	23135220	4	P194	100 (45.4)
Ethanimidothioic acid, N-[[(methylamino) carbonyl]oxy]-, methyl ester.	16752–77–5	4	P066	100 (45.4)
Ethanimidothioic acid, N,N'- [thiobis[(methylimino) carbonyloxy]]bis-, dimethyl ester.	59669260	4	U410	100 (45.4)
Ethanol, 2-ethoxy-	110–80–5	4	U359	1000 (454)
Ethanol, 2,2′-(nitrosoimino)bis-	1116–54–7	4	U173	1 (0.454)
Ethanol, 2,2'-oxybis-, dicarbamate	5952261	4	U395	5000 (2270)
Ethanone, 1-phenyl-	98–86–2	3,4	U004	5000 (2270)
Ethene, chloro-	75–01–4	2,3,4	U043	1 (0.454)
Ethene, (2-chloroethoxy)-	110–75–8	2,4	U042	1000 (454)
Ethene, 1,1-dichloro-	75–35–4	1,2,3,4	U078	100 (45.4)
Ethene, 1,2-dichloro-(E)	156–60–5	2,4	U079	1000 (454)
Ethene, tetrachloro-	127–18–4	2,3,4	U210	100 (45.4)
Ethene, trichloro-	79–01–6	1,2,3,4	U228	100 (45.4)
Ethion	563–12–2	1		10 (4.54)

TABLE 302.4—LIST OF HAZARDOUS SUBSTANCES AND REPORTABLE QUANTITIES—Continued

[Note: All Comments/Notes Are Located at the End of This Table]

Hazardous substance	CASRN	Statutory code†	RCRA waste No.	Final RQ pounds (Kg)
Ethyl acetate	141–78–6	4	U112	5000 (2270)
Ethyl acrylate	140–88–5	3,4	U113	1000 (454)
Ethylbenzene	100–41–4	1,2,3		1000 (454)
Ethyl carbamate	51–79–6	3,4	U238	100 (45.4)
Ethyl chloride	75–00–3	2,3		100 (45.4)
Ethyl cyanide	107–12–0	4	P101	10 (4.54)
Ethylenebisdithiocarbamic acid, salts & esters	111–54–6	4	U114	5000 (2270)
Ethylenediamine	107–15–3	1		5000 (2270)
Ethylenediamine-tetraacetic acid (EDTA)	60–00–4	1		5000 (2270)
Ethylene dibromide	106–93–4	1,3,4	U067	1 (0.454)
Ethylene dichloride	107–06–2	1,2,3,4	U077	100 (45.4)
Ethylene glycol	107–21–1	3		5000 (2270)
Ethylene glycol monoethyl ether	110–80–5	4	U359	1000 (454)
Ethylene oxide	75–21–8	3,4	U115	10 (4.54)
Ethylenethiourea	96–45–7	3,4	U116	10 (4.54)
Ethylenimine	151–56–4	3,4	P054	1 (0.454)
Ethyl ether	60–29–7	4	U117	100 (45.4)
Ethylidene dichloride	75–34–3	2,3,4	U076	1000 (454)
Ethyl methacrylate	97–63–2	4	U118	1000 (454)
Ethyl methanesulfonate	62–50–0	4	U119	1 (0.454)
Famphur	52–85–7	4	P097	1000 (454)
Ferric ammonium citrate	1185–57–5	1		1000 (454)
Ferric ammonium oxalate	2944–67–4	1		1000 (454)
	55488–87–4			
Ferric chloride	7705–08–0	1		1000 (454)
Ferric fluoride	7783–50–8	1		100 (45.4)
Ferric nitrate	10421–48–4	1		1000 (454)
Ferric sulfate	10028–22–5	1		1000 (454)
Ferrous ammonium sulfate	10045–89–3	1		1000 (454)
Ferrous chloride	7758–94–3	1		100 (45.4)
Ferrous sulfate	7720–78–7	1		1000 (454)
	7782–63–0			
Fine mineral fibers[c]	N.A.	3		**
Fluoranthene	206–44–0	2,4	U120	100 (45.4)
Fluorene	86–73–7	2		5000 (2270)
Fluorine	7782–41–4	4	P056	10 (4.54)
Fluoroacetamide	640–19–7	4	P057	100 (45.4)
Fluoroacetic acid, sodium salt	62–74–8	4	P058	10 (4.54)
Formaldehyde	50–00–0	1,3,4	U122	100 (45.4)
Formetanate hydrochloride	23422539	4	P198	100 (45.4)
Formic acid	64–18–6	1,4	U123	5000 (2270)
Formparanate	17702577	4	P197	100 (45.4)
Fulminic acid, mercury(2+)salt	628–86–4	4	P065	10 (4.54)
Fumaric acid	110–17–8	1		5000 (2270)
Furan	110–00–9	4	U124	100 (45.4)
2-Furancarboxaldehyde	98–01–1	1,4	U125	5000 (2270)
2,5-Furandione	108–31–6	1,3,4	U147	5000 (2270)
Furan, tetrahydro-	109–99–9	4	U213	1000 (454)
Furfural	98–01–1	1,4	U125	5000 (2270)
Furfuran	110–00–9	4	U124	100 (45.4)
Glucopyranose, 2-deoxy-2–(3-methyl-3-nitrosoureido)-,D-	18883–66–4	4	U206	1 (0.454)
D-Glucose, 2-deoxy-2-[[(methylnitrosoamino)-carbonyl]amino]-.	18883–66–4	4	U206	1 (0.454)
Glycidylaldehyde	765–34–4	4	U126	10 (4.54)
Glycol ethers[d]	N.A.	3		**
Guanidine, N-methyl-N′-nitro-N-nitroso-	70–25–7	4	U163	10 (4.54)
Guthion	86–50–0	1		1 (0.454)
HALOETHERS	N.A.	2		**
HALOMETHANES	N.A.	2		**
Heptachlor	76–44–8	1,2,3,4	P059	1 (0.454)
HEPTACHLOR AND METABOLITES	N.A.	2		**
Heptachlor epoxide	1024–57–3	2		1 (0.454)
Hexachlorobenzene	118–74–1	2,3,4	U127	10 (4.54)
Hexachlorobutadiene	87–68–3	2,3,4	U128	1 (0.454)
HEXACHLOROCYCLOHEXANE (all isomers)	608–73–1	2		**
Hexachlorocyclopentadiene	77–47–4	1,2,3,4	U130	10 (4.54)
Hexachloroethane	67–72–1	2,3,4	U131	100 (45.4)
Hexachlorophene	70–30–4	4	U132	100 (45.4)
Hexachloropropene	1888–71–7	4	U243	1000 (454)

TABLE 302.4—LIST OF HAZARDOUS SUBSTANCES AND REPORTABLE QUANTITIES—Continued

[Note: All Comments/Notes Are Located at the End of This Table]

Hazardous substance	CASRN	Statutory code†	RCRA waste No.	Final RQ pounds (Kg)
Hexaethyl tetraphosphate	757–58–4	4	P062	100 (45.4)
Hexamethylene-1,6–diisocyanate	822–06–0	3		100 (45.4)
Hexamethylphosphoramide	680–31–9	3		1 (0.454)
Hexane	110–54–3	3		5000 (2270)
Hexone	108–10–1	3,4	U161	5000 (2270)
Hydrazine	302–01–2	3,4	U133	1 (0.454)
Hydrazinecarbothioamide	79–19–6	4	P116	100 (45.4)
Hydrazine, 1,2-diethyl-	1615–80–1	4	U086	10 (4.54)
Hydrazine, 1,1-dimethyl-	57–14–7	3,4	U098	10 (4.54)
Hydrazine, 1,2-dimethyl-	540–73–8	4	U099	1 (0.454)
Hydrazine, 1,2-diphenyl-	122–66–7	2,3,4	U109	10 (4.54)
Hydrazine, methyl-	60–34–4	3,4	P068	10 (4.54)
Hydrochloric acid	7647–01–0	1,3		5000 (2270)
Hydrocyanic acid	74–90–8	1,4	P063	10 (4.54)
Hydrofluoric acid	7664–39–3	1,3,4	U134	100 (45.4)
Hydrogen chloride	7647–01–0	1,3		5000 (2270)
Hydrogen cyanide	74–90–8	1,4	P063	10 (4.54)
Hydrogen fluoride	7664–39–3	1,3,4	U134	100 (45.4)
Hydrogen phosphide	7803–51–2	3,4	P096	100 (45.4)
Hydrogen sulfide H2S	7783–06–4	1,4	U135	100 (45.4)
Hydroperoxide, 1-methyl-1-phenylethyl-	80–15–9	4	U096	10 (4.54)
Hydroquinone	123–31–9	3		100 (45.4)
2-Imidazolidinethione	96–45–7	3,4	U116	10 (4.54)
Indeno(1,2,3-cd)pyrene	193–39–5	2,4	U137	100 (45.4)
Iodomethane	74–88–4	3,4	U138	100 (45.4)
1,3-Isobenzofurandione	85–44–9	3,4	U190	5000 (2270)
Isobutyl alcohol	78–83–1	4	U140	5000 (2270)
Isodrin	465–73–6	4	P060	1 (0.454)
Isolan	119380	4	P192	100 (45.4)
Isophorone	78–59–1	2,3		5000 (2270)
Isoprene	78–79–5	1		100 (45.4)
Isopropanolamine dodecylbenzenesulfonate	42504–46–1	1		1000 (454)
3-Isopropylphenyl N-methylcarbamate	64006	4	P202	10 (4.54)
Isosafrole	120–58–1	4	U141	100 (45.4)
3(2H)-Isoxazolone, 5–(aminomethyl)-	2763–96–4	4	P007	1000 (454)
Kepone	143–50–0	1,4	U142	1 (0.454)
Lasiocarpine	303–34–4	4	U143	10 (4.54)
Lead††	7439–92–1	2		10 (4.54)
Lead acetate	301–04–2	1,4	U144	10 (4.54)
LEAD AND COMPOUNDS	N.A.	2,3		**
Lead arsenate	7784–40–9	1		1 (0.454)
	7645–25–2			
	10102–48–4			
Lead, bis(acetato-O)tetrahydroxytri-	1335–32–6	4	U146	10 (4.54)
Lead chloride	7758–95–4	1		10 (4.54)
Lead compounds	N.A.	2,3		**
Lead fluoborate	13814–96–5	1		10 (4.54)
Lead fluoride	7783–46–2	1		10 (4.54)
Lead iodide	10101–63–0	1		10 (4.54)
Lead nitrate	10099–74–8	1		10 (4.54)
Lead phosphate	7446–27–7	4	U145	10 (4.54)
Lead stearate	1072–35–1	1		10 (4.54)
	7428–48–0			
	52652–59–2			
	56189–09–4			
Lead subacetate	1335–32–6	4	U146	10 (4.54)
Lead sulfate	7446–14–2	1		10 (4.54)
	15739–80–7			
Lead sulfide	1314–87–0	1		10 (4.54)
Lead thiocyanate	592–87–0	1		10 (4.54)
Lindane	58–89–9	1,2,3,4	U129	1 (0.454)
Lindane (all isomers)	58–89–9	1,2,3,4	U129	1 (0.454)
Lithium chromate	14307–35–8	1		10 (4.54)
Malathion	121–75–5	1		100 (45.4)
Maleic acid	110–16–7	1		5000 (2270)
Maleic anhydride	108–31–6	1,3,4	U147	5000 (2270)
Maleic hydrazide	123–33–1	4	U148	5000 (2270)
Malononitrile	109–77–3	4	U149	1000 (454)
Manganese, bis (dimethylcarbamodithioato-S,S')-	15339363	4	P196	10 (4.54)

TABLE 302.4—LIST OF HAZARDOUS SUBSTANCES AND REPORTABLE QUANTITIES—Continued

[Note: All Comments/Notes Are Located at the End of This Table]

Hazardous substance	CASRN	Statutory code†	RCRA waste No.	Final RQ pounds (Kg)
Manganese Compounds	N.A.	3		**
Manganese dimethyldithiocarbamate	15339363	4	P196	10 (4.54)
MDI	101–68–8	3		5000 (2270)
MEK	78–93–3	3,4	U159	5000 (2270)
Melphalan	148–82–3	4	U150	1 (0.454)
Mercaptodimethur	2032–65–7	1,4	P199	10 (4.54)
Mercuric cyanide	592–04–1	1		1(0.454)
Mercuric nitrate	10045–94–0	1		10 (4.54)
Mercuric sulfate	7783–35–9	1		10 (4.54)
Mercuric thiocyanate	592–85–8	1		10 (4.54)
Mercurous nitrate	10415–75–5	1	10 (4.54)	7782–86–7
Mercury	7439–97–6	2,3,4	U151	1 (0.454)
MERCURY AND COMPOUNDS	N.A.	2,3		**
Mercury, (acetato-O)phenyl-	62–38–4	4	P092	100 (45.4)
Mercury Compounds	N.A.	2,3		**
Mercury fulminate	628–86–4	4	P065	10 (4.54)
Methacrylonitrile	126–98–7	4	U152	1000 (454)
Methanamine, N-methyl-	124–40–3	1,4	U092	1000 (454)
Methanamine, N-methyl-N-nitroso-	62–75–9	2,3,4	P082	10 (4.54)
Methane, bromo-	74–83–9	2,3,4	U029	1000 (454)
Methane, chloro-	74–87–3	2,3,4	U045	100 (45.4)
Methane, chloromethoxy-	107–30–2	3,4	U046	10 (4.54)
Methane, dibromo-	74–95–3	4	U068	1000 (454)
Methane, dichloro-	75–09–2	2,3,4	U080	1000 (454)
Methane, dichlorodifluoro-	75–71–8	4	U075	5000 (2270)
Methane, iodo-	74–88–4	3,4	U138	100 (45.4)
Methane, isocyanato-	624–83–9	3,4	P064	10 (4.54)
Methane, oxybis(chloro-	542–88–1	2,3,4	P016	10 (4.54)
Methanesulfenyl chloride, trichloro-	594–42–3	4	P118	100 (45.4)
Methanesulfonic acid, ethyl ester	62–50–0	4	U119	1 (0.454)
Methane, tetrachloro-	56–23–5	1,2,3,4	U211	10 (4.54)
Methane, tetranitro-	509–14–8	4	P112	10 (4.54)
Methanethiol	74–93–1	1,4	U153	100 (45.4)
Methane, tribromo-	75–25–2	2,3,4	U225	100 (45.4)
Methane, trichloro-	67–66–3	1,2,3,4	U044	10 (4.54)
Methane, trichlorofluoro-	75–69–4	4	U121	5000 (2270)
Methanimidamide, N,N-dimethyl-N'-[3-[[(methylamino)-carbonyl]oxy]phenyl]-, monohydrochloride.	23422539	4	P198	100 (45.4)
Methanimidamide, N,N-dimethyl-N'-[2-methyl-4-[[(methylamino) carbonyl]oxy]phenyl]-.	17702577	4	P197	100 (45.4)
6,9-Methano-2,4,3-benzodioxathiepin, 6,7,8,9,10,10-hexachloro-1,5,5a,6,9,9a-hexahydro-, 3-oxide.	115–29–7	1,2,4	P050	1 (0.454)
4,7-Methano-1H-indene, 1,4,5,6,7,8,8-heptachloro-3a,4,7,7a-tetrahydro-.	76–44–8	1,2,3,4	P059	1 (0.454)
4,7-Methano-1H-indene, 1,2,4,5,6,7,8,8-octachloro-2,3,3a,4,7,7a-hexahydro—.	57–74–9	1,2,3,4	U036	1 (0.454)
Methanol	67–56–1	3,4	U154	5000 (2270)
Methapyrilene	91–80–5	4	U155	5000 (2270)
1,3,4-Metheno-2H-cyclobuta[cd]pentalen-2-one, 1,1a,3,3a,4,5,5,5a,5b,6-decachlorooctahydro-.	143–50–0	1,4	U142	1 (0.454)
Methiocarb	2032–65–7	1,4	P199	10 (4.54)
Methomyl	16752–77–5	4	P066	100 (45.4)
Methoxychlor	72–43–5	1,3,4	U247	1 (0.454)
Methyl alcohol	67–56–1	3,4	U154	5000 (2270)
2-Methyl aziridine	75–55–8	3,4	P067	1 (0.454)
Methyl bromide	74–83–9	2,3,4	U029	1000 (454)
1-Methylbutadiene	504–60–9	4	U186	100 (45.4)
Methyl chloride	74–87–3	2,3,4	U045	100 (45.4)
Methyl chlorocarbonate	79–22–1	4	U156	1000 (454)
Methyl chloroform	71–55–6	2,3,4	U226	1000 (454)
3-Methylcholanthrene	56–49–5	4	U157	10 (4.54)
4,4′-Methylenebis(2-chloroaniline)	101–14–4	3,4	U158	10 (4.54)
Methylene bromide	74–95–3	4	U068	1000 (454)
Methylene chloride	75–09–2	2,3,4	U080	1000 (454)
4,4′-Methylenedianiline	101–77–9	3		10 (4.54)
Methylene diphenyl diisocyanate	101–68–8	3		5000 (2270)
Methyl ethyl ketone	78–93–3	3,4	U159	5000 (2270)
Methyl ethyl ketone peroxide	1338–23–4	4	U160	10 (4.54)
Methyl hydrazine	60–34–4	3,4	P068	10 (4.54)

TABLE 302.4—LIST OF HAZARDOUS SUBSTANCES AND REPORTABLE QUANTITIES—Continued

[Note: All Comments/Notes Are Located at the End of This Table]

Hazardous substance	CASRN	Statutory code†	RCRA waste No.	Final RQ pounds (Kg)
Methyl iodide	74–88–4	3,4	U138	100 (45.4)
Methyl isobutyl ketone	108–10–1	3,4	U161	5000 (2270)
Methyl isocyanate	624–83–9	3,4	P064	10 (4.54)
2-Methyllactonitrile	75–86–5	1,4	P069	10 (4.54)
Methyl mercaptan	74–93–1	1,4	U153	100 (45.4)
Methyl methacrylate	80–62–6	1,3,4	U162	1000 (454)
Methyl parathion	298–00–0	1,4	P071	100 (45.4)
4-Methyl-2-pentanone	108–10–1	3,4	U161	5000 (2270)
Methyl tert-butyl ether	1634–04–4	3		1000 (454)
Methylthiouracil	56–04–2	4	U164	10 (4.54)
Metolcarb	1129415	4	P190	1000 (454)
Mevinphos	7786–34–7	1		10 (4.54)
Mexacarbate	315–18–4	1,4	P128	1000 (454)
Mitomycin C	50–07–7	4	U010	10 (4.54)
MNNG	70–25–7	4	U163	10 (4.54)
Monoethylamine	75–04–7	1		100 (45.4)
Monomethylamine	74–89–5	1		100 (45.4)
Naled	300–76–5	1		10 (4.54)
5,12-Naphthacenedione, 8-acetyl-10-[(3-amino-2,3,6-trideoxy-alpha-L-lyxo-hexopyranosyl)oxy]-7,8,9,10-tetrahydro-6,8,11-trihydroxy-1-methoxy-, (8S-cis)-.	20830–81–3	4	U059	10 (4.54)
1-Naphthalenamine	134–32–7	4	U167	100 (45.4)
2-Naphthalenamine	91–59–8	4	U168	10 (4.54)
Naphthalenamine, N,N′-bis(2-chloroethyl)-	494–03–1	4	U026	100 (45.4)
Naphthalene	91–20–3	1,2,3,4	U165	100 (45.4)
Naphthalene, 2-chloro-	91–58–7	2,4	U047	5000 (2270)
1,4-Naphthalenedione	130–15–4	4	U166	5000 (2270)
2,7-Naphthalenedisulfonic acid, 3,3′-[(3,3′-dimethyl-(1,1′-biphenyl)-4,4′-diyl)-bis(azo)]bis(5-amino-4-hydroxy)-tetrasodium salt.	72–57–1	4	U236	10 (4.54)
1-Naphthalenol, methylcarbamate	63–25–2	1,3,4	U279	100 (45.4)
Naphthenic acid	1338–24–5	1		100 (45.4)
1,4-Naphthoquinone	130–15–4	4	U166	5000 (2270)
alpha-Naphthylamine	134–32–7	4	U167	100 (45.4)
beta-Naphthylamine	91–59–8	4	U168	10 (4.54)
alpha-Naphthylthiourea	86–88–4	4	P072	100 (45.4)
Nickel††	7440–02–0	2		100 (45.4)
Nickel ammonium sulfate	15699–18–0	1		100 (45.4)
NICKEL AND COMPOUNDS	N.A.	2,3		**
Nickel carbonyl Ni(CO)4, (T-4)-	13463–39–3	4	P073	10 (4.54)
Nickel chloride	7718–54–9 37211–05–5	1		100 (45.4)
Nickel compounds	N.A.	2,3		**
Nickel cyanide Ni(CN)2	557–19–7	4	P074	10 (4.54)
Nickel hydroxide	12054–48–7	1		10 (4.54)
Nickel nitrate	14216–75–2	1		100 (45.4)
Nickel sulfate	7786–81–4	1		100 (45.4)
Nicotine, & salts	54–11–5	4	P075	100 (45.4)
Nitric acid	7697–37–2	1		1000 (454)
Nitric acid, thallium (1+) salt	10102–45–1	4	U217	100 (45.4)
Nitric oxide	10102–43–9	4	P076	10 (4.54)
p-Nitroaniline	100–01–6	4	P077	5000 (2270)
Nitrobenzene	98–95–3	1,2,3,4	U169	1000 (454)
4-Nitrobiphenyl	92–93–3	3		10 (4.54)
Nitrogen dioxide	10102–44–0 10544–72–6	1,4	P078	10 (4.54)
Nitrogen oxide NO	10102–43–9	4	P076	10 (4.54)
Nitrogen oxide NO2	10102–44–0 10544–72–6	1,4	P078	10 (4.54)
Nitroglycerine	55–63–0	4	P081	10 (4.54)
Nitrophenol (mixed)	25154–55–6	1		100 (45.4)
m-Nitrophenol	554–84–7			
o-Nitrophenol	88–75–5	1,2		100 (45.4)
p-Nitrophenol	100–02–7	1,2,3,4	U170	100 (45.4)
2-Nitrophenol	88–75–5	1,2		100 (45.4)
4-Nitrophenol	100–02–7	1,2,3,4	U170	100 (45.4)
NITROPHENOLS	N.A.	2		**
2-Nitropropane	79–46–9	3,4	U171	10 (4.54)
NITROSAMINES	N.A.	2		**

TABLE 302.4—LIST OF HAZARDOUS SUBSTANCES AND REPORTABLE QUANTITIES—Continued

[Note: All Comments/Notes Are Located at the End of This Table]

Hazardous substance	CASRN	Statutory code†	RCRA waste No.	Final RQ pounds (Kg)
N-Nitrosodi-n-butylamine	924–16–3	4	U172	10 (4.54)
N-Nitrosodiethanolamine	1116–54–7	4	U173	1 (0.454)
N-Nitrosodiethylamine	55–18–5	4	U174	1 (0.454)
N-Nitrosodimethylamine	62–75–9	2,3,4	P082	10 (4.54)
N-Nitrosodiphenylamine	86–30–6	2		100 (45.4)
N-Nitroso-N-ethylurea	759–73–9	4	U176	1 (0.454)
N-Nitroso-N-methylurea	684–93–5	3,4	U177	1 (0.454)
N-Nitroso-N-methylurethane	615–53–2	4	U178	1 (0.454)
N-Nitrosomethylvinylamine	4549–40–0	4	P084	10 (4.54)
N-Nitrosomorpholine	59–89–2	3		1 (0.454)
N-Nitrosopiperidine	100–75–4	4	U179	10 (4.54)
N-Nitrosopyrrolidine	930–55–2	4	U180	1 (0.454)
Nitrotoluene	1321–12–6	1		1000 (454)
m-Nitrotoluene	99–08–1			
o-Nitrotoluene	88–72–2			
p-Nitrotoluene	99–99–0			
5-Nitro-o-toluidine	99–55–8	4	U181	100 (45.4)
Octamethylpyrophosphoramide	152–16–9	4	P085	100 (45.4)
Osmium oxide OsO4, (T–4)–	20816–12–0	4	P087	1000 (454)
Osmium tetroxide	20816–12–0	4	P087	1000 (454)
7-Oxabicyclo[2.2.1]heptane-2,3-dicarboxylic acid	145–73–3	4	P088	1000 (454)
Oxamyl	23135220	4	P194	100 (45.4)
1,2-Oxathiolane, 2,2-dioxide	1120–71–4	3,4	U193	10 (4.54)
2H-1,3,2-Oxazaphosphorin-2–amine, N,N- bis(2-chloroethyl)tetrahydro-, 2-oxide.	50–18–0	4	U058	10 (4.54)
Oxirane	75–21–8	3,4	U115	10 (4.54)
Oxiranecarboxyaldehyde	765–34–4	4	U126	10 (4.54)
Oxirane, (chloromethyl)-	106–89–8	1,3,4	U041	100 (45.4)
Paraformaldehyde	30525–89–4	1		1000 (454)
Paraldehyde	123–63–7	4	U182	1000 (454)
Parathion	56–38–2	1,3,4	P089	10 (4.54)
PCBs	1336–36–3	1,2,3		1 (0.454)
PCNB	82–68–8	3,4	U185	100 (45.4)
Pentachlorobenzene	608–93–5	4	U183	10 (4.54)
Pentachloroethane	76–01–7	4	U184	10 (4.54)
Pentachloronitrobenzene	82–68–8	3,4	U185	100 (45.4)
Pentachlorophenol	87–86–5	1,2,3,4	See F027	10 (4.54)
1,3-Pentadiene	504–60–9	4	U186	100 (45.4)
Perchloroethylene	127–18–4	2,3,4	U210	100 (45.4)
Phenacetin	62–44–2	4	U187	100 (45.4)
Phenanthrene	85–01–8	2		5000 (2270)
Phenol	108–95–2	1,2,3,4	U188	1000 (454)
Phenol, 2-chloro-	95–57–8	2,4	U048	100 (45.4)
Phenol, 4-chloro-3-methyl-	59–50–7	2,4	U039	5000 (2270)
Phenol, 2-cyclohexyl-4,6-dinitro-	131–89–5	4	P034	100 (45.4)
Phenol, 2,4-dichloro-	120–83–2	2,4	U081	100 (45.4)
Phenol, 2,6-dichloro-	87–65–0	4	U082	100 (45.4)
Phenol, 4,4′-(1,2-diethyl-1,2-ethenediyl)bis-, (E)	56–53–1	4	U089	1 (0.454)
Phenol, 2,4-dimethyl-	105–67–9	2,4	U101	100 (45.4)
Phenol, 4-(dimethylamino)-3,5-dimethyl-, 4 methylcarbamate (ester).	315–18–4	1,4	P128	1000 (454)
Phenol, (3,5-dimethyl-4-(methylthio)-, methylcarbamate	2032–65–7	1,4	P199	10 (4.54)
Phenol, 2,4-dinitro-	51–28–5	1,2,3,4	P048	10 (4.54)
Phenol, methyl-	1319–77–3	1,3,4	U052	100 (45.4)
Phenol, 2-methyl-4,6-dinitro-, & salts	534–52–1	2,3,4	P047	10 (4.54)
Phenol, 2,2′-methylenebis[3,4,6- trichloro-	70–30–4	4	U132	100 (45.4)
Phenol, 2-(1-methylethoxy)-, methylcarbamate	114–26–1	3,4	U411	100 (45.4)
Phenol, 3-(1-methylethyl)-, methyl carbamate	64006	4	P202	10 (4.54)
Phenol, 3-methyl-5-(1-methylethyl)-, methyl carbamate	2631370	4	P201	1000 (454)
Phenol, 2-(1-methylpropyl)-4,6-dinitro-	88–85–7	4	P020	1000 (454)
Phenol, 4-nitro-	100–02–7	1,2,3,4	U170	100 (45.4)
Phenol, pentachloro-	87–86–5	1,2,3,4	See F027	10 (4.54)
Phenol, 2,3,4,6-tetrachloro-	58–90–2	4	See F027	10 (4.54)
Phenol, 2,4,5-trichloro-	95–95–4	1,3,4	See F027	10 (4.54)
Phenol, 2,4,6-trichloro-	88–06–2	1,2,3,4	See F027	10 (4.54)
Phenol, 2,4,6-trinitro-, ammonium salt	131–74–8	4	P009	10 (4.54)
L-Phenylalanine, 4-[bis(2-chloroethyl)amino]-	148–82–3	4	U150	1 (0.454)
p-Phenylenediamine	106–50–3	3		5000 (2270)
Phenylmercury acetate	62–38–4	4	P092	100 (45.4)

TABLE 302.4—LIST OF HAZARDOUS SUBSTANCES AND REPORTABLE QUANTITIES—Continued

[Note: All Comments/Notes Are Located at the End of This Table]

Hazardous substance	CASRN	Statutory code†	RCRA waste No.	Final RQ pounds (Kg)
Phenylthiourea	103–85–5	4	P093	100 (45.4)
Phorate	298–02–2	4	P094	10 (4.54)
Phosgene	75–44–5	1,3,4	P095	10 (4.54)
Phosphine	7803–51–2	3,4	P096	100 (45.4)
Phosphoric acid	7664–38–2	1		5000 (2270)
Phosphoric acid, diethyl 4-nitrophenyl ester	311–45–5	4	P041	100 (45.4)
Phosphoric acid, lead(2+) salt (2:3)	7446–27–7	4	U145	10 (4.54)
Phosphorodithioic acid, O,O-diethyl S-[2-(ethylthio)ethyl] ester.	298–04–4	1,4	P039	1 (0.454)
Phosphorodithioic acid, O,O-diethyl S-[(ethylthio)methyl] ester.	298–02–2	4	P094	10 (4.54)
Phosphorodithioic acid, O,O-diethyl S-methyl ester	3288-58–2	4	U087	5000 (2270)
Phosphorodithioic acid, O,O-dimethyl S-[2(methylamino)-2-oxoethyl] ester.	60–51–5	4	P044	10 (4.54)
Phosphorofluoridic acid, bis(1-methylethyl) ester	55–91–4	4	P043	100 (45.4)
Phosphorothioic acid, O,O-diethyl O-(4-nitrophenyl) ester	56–38–2	1,3,4	P089	10 (4.54)
Phosphorothioic acid, O,O-diethyl O-pyrazinyl ester	297–97–2	4	P040	100 (45.4)
Phosphorothioic acid, O-[4-[(dimethylamino) sulfonyl]phenyl] O,O-dimethyl ester.	52–85–7	4	P097	1000 (454)
Phosphorothioic acid, O,O-dimethyl O-(4-nitrophenyl) ester.	298–00–0	1,4	P071	100 (45.4)
Phosphorus	7723–14–0	1,3		1 (0.454)
Phosphorus oxychloride	10025–87–3	1		1000 (454)
Phosphorus pentasulfide	1314–80–3	1,4	U189	100 (45.4)
Phosphorus sulfide	1314–80–3	1,4	U189	100 (45.4)
Phosphorus trichloride	7719–12–2	1		1000 (454)
Physostigmine	57476	4	P204	100 (45.4)
Physostigmine salicylate	57647	4	P188	100 (45.4)
PHTHALATE ESTERS	N.A.	2		**
Phthalic anhydride	85–44–9	3,4	U190	5000 (2270)
2-Picoline	109–06–8	4	U191	5000 (2270)
Piperidine, 1-nitroso-	100–75–4	4	U179	10 (4.54)
Plumbane, tetraethyl-	78–00–2	1,4	P110	10 (4.54)
POLYCHLORINATED BIPHENYLS	1336–36–3	1,2,3		1 (0.454)
Polycyclic Organic Matter[e]	N.A.	3		**
POLYNUCLEAR AROMATIC HYDROCARBONS	N.A.	2		**
Potassium arsenate	7784–41–0	1		1 (0.454)
Potassium arsenite	10124–50–2	1		1 (0.454)
Potassium bichromate	7778–50–9	1		10 (4.54)
Potassium chromate	7789–00–6	1		10 (4.54)
Potassium cyanide K(CN)	151–50–8	1,4	P098	10 (4.54)
Potassium hydroxide	1310–58–3	1		1000 (454)
Potassium permanganate	7722–64–7	1		100 (45.4)
Potassium silver cyanide	506–61–6	4	P099	1 (0.454)
Promecarb	2631370	4	P201	1000 (454)
Pronamide	23950–58–5	4	U192	5000 (2270)
Propanal, 2-methyl-2-(methyl- sulfonyl)-, O-[(methylamino)carbonyl] oxime.	1646884	4	P203	100 (45.4)
Propanal, 2-methyl-2-(methylthio)-, O-[(methylamino)carbonyl]oxime.	116–06–3	4	P070	1 (0.454)
1-Propanamine	107–10–8	4	U194	5000 (2270)
1-Propanamine, N-propyl-	142–84–7	4	U110	5000 (2270)
1-Propanamine, N-nitroso-N-propyl-	621–64–7	2,4	U111	10 (4.54)
Propane, 1,2-dibromo-3-chloro-	96–12–8	3,4	U066	1 (0.454)
Propane, 1,2-dichloro-	78–87–5	1,2,3,4	U083	1000 (454)
Propanedinitrile	109–77–3	4	U149	1000 (454)
Propanenitrile	107–12–0	4	P101	10 (4.54)
Propanenitrile, 3-chloro-	542–76–7	4	P027	1000 (454)
Propanenitrile, 2-hydroxy-2-methyl-	75–86–5	1,4	P069	10 (4.54)
Propane, 2-nitro-	79–46–9	3,4	U171	10 (4.54)
Propane, 2,2′-oxybis[2-chloro-	108–60–1	2,4	U027	1000 (454)
1,3-Propane sultone	1120–71–4	3,4	U193	10 (4.54)
1,2,3-Propanetriol, trinitrate	55–63–0	4	P081	10 (4.54)
Propanoic acid, 2-(2,4,5-trichlorophenoxy)-	93–72–1	1,4	See F027	100 (45.4)
1-Propanol, 2,3-dibromo-, phosphate (3:1)	126–72–7	4	U235	10 (4.54)
1-Propanol, 2-methyl-	78–83–1	4	U140	5000 (2270)
2-Propanone	67–64–1	4	U002	5000 (2270)
2-Propanone, 1-bromo-	598–31–2	4	P017	1000 (454)
Propargite	2312–35–8	1		10 (4.54)

TABLE 302.4—LIST OF HAZARDOUS SUBSTANCES AND REPORTABLE QUANTITIES—Continued

[Note: All Comments/Notes Are Located at the End of This Table]

Hazardous substance	CASRN	Statutory code†	RCRA waste No.	Final RQ pounds (Kg)
Propargyl alcohol	107–19–7	4	P102	1000 (454)
2-Propenal	107–02–8	1,2,3,4	P003	1 (0.454)
2-Propenamide	79–06–1	3,4	U007	5000 (2270)
1-Propene, 1,3-dichloro-	542–75–6	1,2,3,4	U084	100 (45.4)
1-Propene, 1,1,2,3,3,3-hexachloro-	1888–71–7	4	U243	1000 (454)
2-Propenenitrile	107–13–1	1,2,3,4	U009	100 (45.4)
2-Propenenitrile, 2-methyl-	126–98–7	4	U152	1000 (454)
2-Propenoic acid	79–10–7	3,4	U008	5000 (2270)
2-Propenoic acid, ethyl ester	140–88–5	3,4	U113	1000 (454)
2-Propenoic acid, 2-methyl-, ethyl ester	97–63–2	4	U118	1000 (454)
2-Propenoic acid, 2-methyl-, methyl ester	80–62–6	1,3,4	U162	1000 (454)
2-Propen-1-ol	107–18–6	1,4	P005	100 (45.4)
Propham	122429	4	U373	1000 (454)
beta-Propiolactone	57–57–8	3		10 (4.54)
Propionaldehyde	123–38–6	3	1000 (454)	
Propionic acid	79–09–4	1		5000 (2270)
Propionic anhydride	123–62–6	1		5000 (2270)
Propoxur (Baygon)	114–26–1	3,4	U411	100 (45.4)
n-Propylamine	107–10–8	4	U194	5000 (2270)
Propylene dichloride	78–87–5	1,2,3,4	U083	1000 (454)
Propylene oxide	75–56–9	1,3		100 (45.4)
1,2-Propylenimine	75–55–8	3,4	P067	1 (0.454)
2-Propyn-1-ol	107–19–7	4	P102	1000 (454)
Prosulfocarb	52888809	4	U387	5000 (2270)
Pyrene	129–00–0	2		5000 (2270)
Pyrethrins	121–29–9	1		1 (0.454)
	121–21–1			
	8003–34–7			
3,6-Pyridazinedione, 1,2-dihydro-	123–33–1	4	U148	5000 (2270)
4-Pyridinamine	504–24–5	4	P008	1000 (454)
Pyridine	110–86–1	4	U196	1000 (454)
Pyridine, 2-methyl-	109–06–8	4	U191	5000 (2270)
Pyridine, 3-(1-methyl-2-pyrrolidinyl)-, (S)-, & salts	54–11–5	4	P075	100 (45.4)
2,4-(1H,3H)-Pyrimidinedione, 5-[bis(2- chloroethyl)amino]-	66–75–1	4	U237	10 (4.54)
4(1H)-Pyrimidinone, 2,3-dihydro-6-methyl-2-thioxo-	56–04–2	4	U164	10 (4.54)
Pyrrolidine, 1-nitroso-	930–55–2	4	U180	1 (0.454)
Pyrrolo[2,3-b]indol-5-ol, 1,2,3,3a,8,8a- hexahydro-1,3a,8-trimethyl-, methylcarbamate (ester), (3aS-cis)-.	57476	4	P204	100 (45.4)
Quinoline	91–22–5	1,3		5000 (2270)
Quinone	106–51–4	3,4	U197	10 (4.54)
Quintobenzene	82–68–8	3,4	U185	100 (45.4)
Radionuclides (including radon)	N.A.	3		§
Reserpine	50–55–5	4	U200	5000 (2270)
Resorcinol	108–46–3	1,4	U201	5000 (2270)
Safrole	94–59–7	4	U203	100 (45.4)
Selenious acid	7783–00–8	4	U204	10 (4.54)
Selenious acid, dithallium (1+) salt	12039–52–0	4	P114	1000 (454)
Selenium††	7782–49–2	2		100 (45.4)
SELENIUM AND COMPOUNDS	N.A.	2,3		**
Selenium Compounds	N.A.	2,3		**
Selenium dioxide	7446–08–4	1,4	U204	10 (4.54)
Selenium oxide	7446–08–4	1,4	U204	10 (4.54)
Selenium sulfide SeS2	7488–56–4	4	U205	10 (4.54)
Selenourea	630–10–4	4	P103	1000 (454)
L-Serine, diazoacetate (ester)	115–02–6	4	U015	1 (0.454)
Silver ††	7440–22–4	2		1000 (454)
SILVER AND COMPOUNDS	N.A.	2		**
Silver cyanide Ag(CN)	506–64–9	4	P104	1 (0.454)
Silver nitrate	7761–88–8	1		1 (0.454)
Silvex (2,4,5-TP)	93–72–1	1,4	See F027	100 (45.4)
Sodium	7440–23–5	1		10 (4.54)
Sodium arsenate	7631–89–2	1		1 (0.454)
Sodium arsenite	7784–46–5	1		1 (0.454)
Sodium azide	26628–22–8	4	P105	1000 (454)
Sodium bichromate	10588–01–9	1		10 (4.54)
Sodium bifluoride	1333–83–1	1		100 (45.4)
Sodium bisulfite	7631–90–5	1		5000 (2270)
Sodium chromate	7775–11–3	1		10 (4.54)
Sodium cyanide Na(CN)	143–33–9	1,4	P106	10 (4.54)

TABLE 302.4—LIST OF HAZARDOUS SUBSTANCES AND REPORTABLE QUANTITIES—Continued

[Note: All Comments/Notes Are Located at the End of This Table]

Hazardous substance	CASRN	Statutory code†	RCRA waste No.	Final RQ pounds (Kg)
Sodium dodecylbenzenesulfonate	25155–30–0	1		1000 (454)
Sodium fluoride	7681–49–4	1		1000 (454)
Sodium hydrosulfide	16721–80–5	1		5000 (2270)
Sodium hydroxide	1310–73–2	1		1000 (454)
Sodium hypochlorite	7681–52–9	1		100 (45.4)
	10022–70–5			
Sodium methylate	124–41–4	1		1000 (454)
Sodium nitrite	7632–00–0	1		100 (45.4)
Sodium phosphate, dibasic	7558–79–4	1		5000 (2270)
	10039–32–4			
	10140–65–5			
Sodium phosphate, tribasic	7601–54–9	1		5000 (2270)
	10101–89–0			
	10361–89–4			
Sodium selenite	7782–82–3	1		100 (45.4)
	10102–18–8			
Streptozotocin	18883–66–4	4	U206	1 (0.454)
Strontium chromate	7789–06–2	1		10 (4.54)
Strychnidin-10-one, & salts	57–24–9	1,4	P108	10 (4.54)
Strychnidin-10-one, 2,3-dimethoxy-	357–57–3	4	P018	100 (45.4)
Strychnine, & salts	57–24–9	1,4	P108	10 (4.54)
Styrene	100–42–5	1,3		1000 (454)
Styrene oxide	96–09–3	3		100 (45.4)
Sulfuric acid	7664–93–9	1		1000 (454)
	8014–95–7			
Sulfuric acid, dimethyl ester	77–78–1	3,4	U103	100 (45.4)
Sulfuric acid, dithallium (1+) salt	7446–18–6	1,4	P115	100 (45.4)
	10031–59–1			
Sulfur monochloride	12771–08–3	1		1000 (454)
Sulfur phosphide	1314–80–3	1,4	U189	100 (45.4)
2,4,5-T	93–76–5	1,4	See F027	1000 (454)
2,4,5-T acid	93–76–5	1,4	See F027	1000 (454)
2,4,5-T amines	2008–46–0	1		5000 (2270)
	1319–72–8			
	3813–14–7			
	6369–96–6			
	6369–97–7			
2,4,5-T esters	93–79–8	1		1000 (454)
	1928–47–8			
	2545–59–7			
	25168–15–4			
	61792–07–2			
2,4,5-T salts	13560–99–1	1		1000 (454)
TCDD	1746–01–6	2,3		1 (0.454)
TDE	72–54–8	1,2,4	U060	1 (0.454)
1,2,4,5-Tetrachlorobenzene	95–94–3	4	U207	5000 (2270)
2,3,7,8-Tetrachlorodibenzo-p-dioxin	1746–01–6	2,3		1 (0.454)
1,1,1,2-Tetrachloroethane	630–20–6	4	U208	100 (45.4)
1,1,2,2-Tetrachloroethane	79–34–5	2,3,4	U209	100 (45.4)
Tetrachloroethylene	127–18–4	2,3,4	U210	100 (45.4)
2,3,4,6-Tetrachlorophenol	58–90–2	4	See F027	10 (4.54)
Tetraethyl pyrophosphate	107–49–3	1,4	P111	10 (4.54)
Tetraethyl lead	78–00–2	1,4	P110	10 (4.54)
Tetraethyldithiopyrophosphate	3689–24–5	4	P109	100 (45.4)
Tetrahydrofuran	109–99–9	4	U213	1000 (454)
Tetranitromethane	509–14–8	4	P112	10 (4.54)
Tetraphosphoric acid, hexaethyl ester	757–58–4	4	P062	100 (45.4)
Thallic oxide	1314–32–5	4	P113	100 (45.4)
Thallium ††	7440–28–0	2		1000 (454)
THALLIUM AND COMPOUNDS	N.A.	2		**
Thallium (I) acetate	563–68–8	4	U214	100 (45.4)
Thallium (I) carbonate	6533–73–9	4	U215	100 (45.4)
Thallium chloride TlCl	7791–12–0	4	U216	100 (45.4)
Thallium (I) nitrate	10102–45–1	4	U217	100 (45.4)
Thallium oxide Tl2O3	1314–32–5	4	P113	100 (45.4)
Thallium (I) selenite	12039–52–0	4	P114	1000 (454)
Thallium (I) sulfate	7446–18–6	1,4	P115	100 (45.4)
	10031–59–1			
Thioacetamide	62–55–5	4	U218	10 (4.54)

TABLE 302.4—LIST OF HAZARDOUS SUBSTANCES AND REPORTABLE QUANTITIES—Continued

[Note: All Comments/Notes Are Located at the End of This Table]

Hazardous substance	CASRN	Statutory code†	RCRA waste No.	Final RQ pounds (Kg)
Thiodicarb	59669260	4	U410	100 (45.4)
Thiodiphosphoric acid, tetraethyl ester	3689–24–5	4	P109	100 (45.4)
Thiofanox	39196–18–4	4	P045	100 (45.4)
Thioimidodicarbonic diamide [(H2N)C(S)] 2NH	541–53–7	4	P049	100 (45.4)
Thiomethanol	74–93–1	1,4	U153	100 (45.4)
Thioperoxydicarbonic diamide [(H2N)C(S)] 2S2, tetramethyl-.	137–26–8	4	U244	10 (4.54)
Thiophanate-methyl	23564058	4	U409	10 (4.54)
Thiophenol	108–98–5	4	P014	100 (45.4)
Thiosemicarbazide	79–19–6	4	P116	100 (45.4)
Thiourea	62–56–6	4	U219	10 (4.54)
Thiourea, (2-chlorophenyl)-	5344–82–1	4	P026	100 (45.4)
Thiourea, 1-naphthalenyl-	86–88–4	4	P072	100 (45.4)
Thiourea, phenyl-	103–85–5	4	P093	100 (45.4)
Thiram	137–26–8	4	U244	10 (4.54)
Tirpate	26419738	4	P185	100 (45.4)
Titanium tetrachloride	7550–45–0	3		1,2,41000 (454)
Toluene	108–88–3	1,2,3,4	U220	1000 (454)
Toluenediamine	95–80–7 496–72–0 823–40–5 25376–45–8	3,4	U221	10 (4.54)
2,4-Toluene diamine	95–80–7 496–72–0 823–40–5 25376–45–8	3,4	U221	10 (4.54)
Toluene diisocyanate	91–08–7 584–84–9 26471–62–5	3,4	U223	100 (45.4)
2,4-Toluene diisocyanate	91–08–7 584–84–9 26471–62–5	3,4	U223	100 (45.4)
o-Toluidine	95–53–4	3,4	U328	100 (45.4)
p-Toluidine	106–49–0	4	U353	100 (45.4)
o-Toluidine hydrochloride	636–21–5	4	U222	100 (45.4)
Toxaphene	8001–35–2	1,2,3,4	P123	1 (0.454)
2,4,5-TP acid	93–72–1	1,4	See F027	100 (45.4)
2,4,5-TP esters	32534–95–5	1		100 (45.4)
Triallate	2303175	4	U389	100 (45.4)
1H-1,2,4-Triazol-3-amine	61–82–5	4	U011	10 (4.54)
Trichlorfon	52–68–6	1		100 (45.4)
1,2,4-Trichlorobenzene	120–82–1	2,3		100 (45.4)
1,1,1-Trichloroethane	71–55–6	2,3,4	U226	1000 (454)
1,1,2-Trichloroethane	79–00–5	2,3,4	U227	100 (45.4)
Trichloroethylene	79–01–6	1,2,3,4	U228	100 (45.4)
Trichloromethanesulfenyl chloride	594–42–3	4	P118	100 (45.4)
Trichloromonofluoromethane	75–69–4	4	U121	5000 (2270)
Trichlorophenol	25167–82–2	1		10 (4.54)
2,3,4-Trichlorophenol	15950–66–0			
2,3,5-Trichlorophenol	933–78–8			
2,3,6-Trichlorophenol	933–75–5			
3,4,5-Trichlorophenol	609–19–8			
2,4,5-Trichlorophenol	95–95–4	1,3,4	See F027	10 (4.54)
2,4,6-Trichlorophenol	88–06–2	1,2,3,4	See F027	10 (4.54)
Triethanolamine dodecylbenzenesulfonate	27323–41–7	1		1000 (454)
Triethylamine	121–44–8	1,3,4	U404	5000 (2270)
Trifluralin	1582–09–8	3		10 (4.54)
Trimethylamine	75–50–3	1		100 (45.4)
2,2,4-Trimethylpentane	540–84–1	3		1000 (454)
1,3,5-Trinitrobenzene	99–35–4	4	U234	10 (4.54)
1,3,5-Trioxane, 2,4,6-trimethyl-	123–63–7	4	U182	1000 (454)
Tris(2,3-dibromopropyl) phosphate	126–72–7	4	U235	10 (4.54)
Trypan blue	72–57–1	4	U236	10 (4.54)
Unlisted Hazardous Wastes Characteristic of Corrosivity	N.A.	4	D002	100 (45.4)
Unlisted Hazardous Wastes Characteristic of Ignitability	N.A.	4	D001	100 (45.4)
Unlisted Hazardous Wastes Characteristic of Reactivity	N.A.	4	D003	100 (45.4)
Unlisted Hazardous Wastes Characteristic of Toxicity:				
Arsenic (D004)	N.A.	4	D004	1 (0.454)

TABLE 302.4—LIST OF HAZARDOUS SUBSTANCES AND REPORTABLE QUANTITIES—Continued

[Note: All Comments/Notes Are Located at the End of This Table]

Hazardous substance	CASRN	Statutory code†	RCRA waste No.	Final RQ pounds (Kg)
Barium (D005)	N.A.	4	D005	1000 (454)
Benzene (D018)	N.A.	1,2,3,4	D018	10 (4.54)
Cadmium (D006)	N.A.	4	D006	10 (4.54)
Carbon tetrachloride (D019)	N.A.	1,2,4	D019	10 (4.54)
Chlordane (D020)	N.A.	1,2,4	D020	1 (0.454)
Chlorobenzene (D021)	N.A.	1,2,4	D021	100 (45.4)
Chloroform (D022)	N.A.	1,2,4	D022	10 (4.54)
Chromium (D007)	N.A.	4	D007	10 (4.54)
o-Cresol (D023)	N.A.	4	D023	100 (45.4)
m-Cresol (D024)	N.A.	4	D024	100 (45.4)
p-Cresol (D025)	N.A.	4	D025	100 (45.4)
Cresol (D026)	N.A.	4	D026	100 (45.4)
2,4-D (D016)	N.A.	1,4	D016	100 (45.4)
1,4-Dichlorobenzene (D027)	N.A.	1,2,4	D027	100 (45.4)
1,2-Dichloroethane (D028)	N.A.	1,2,4	D028	100 (45.4)
1,1-Dichloroethylene (D029)	N.A.	1,2,4	D029	100 (45.4)
2,4-Dinitrotoluene (D030)	N.A.	1,2,4	D030	10 (4.54)
Endrin (D012)	N.A.	1,4	D012	1 (0.454)
Heptachlor (and epoxide) (D031)	N.A.	1,2,4	D031	1 (0.454)
Hexachlorobenzene (D032)	N.A.	2,4	D032	10 (4.54)
Hexachlorobutadiene (D033)	N.A.	2,4	D033	1 (0.454)
Hexachloroethane (D034)	N.A.	2,4	D034	100 (45.4)
Lead (D008)	N.A.	4	D008	10 (4.54)
Lindane (D013)	N.A.	1,4	D013	1 (0.454)
Mercury (D009)	N.A.	4	D009	1 (0.454)
Methoxychlor (D014)	N.A.	1,4	D014	1 (0.454)
Methyl ethyl ketone (D035)	N.A.	4	D035	5000 (2270)
Nitrobenzene (D036)	N.A.	1,2,4	D036	1000 (454)
Pentachlorophenol (D037)	N.A.	1,2,4	D037	10 (4.54)
Pyridine (D038)	N.A.	4	D038	1000 (454)
Selenium (D010)	N.A.	4	D010	10 (4.54)
Silver (D011)	N.A.	4	D011	1 (0.454)
Tetrachloroethylene (D039)	N.A.	2,4	D039	100 (45.4)
Toxaphene (D015)	N.A.	1,4	D015	1 (0.454)
Trichloroethylene (D040)	N.A.	1,2,4	D040	100 (45.4)
2,4,5-Trichlorophenol (D041)	N.A.	1,4	D041	10 (4.54)
2,4,6-Trichlorophenol (D042)	N.A.	1,2,4	D042	10 (4.54)
2,4,5-TP (D017)	N.A.	1,4	D017	100 (45.4)
Vinyl chloride (D043)	N.A.	2,3,4	D043	1 (0.454)
Uracil mustard	66–75–1	4	U237	10 (4.54)
Uranyl acetate	541–09–3	1		100 (45.4)
Uranyl nitrate	10102–06–4	1		100 (45.4)
	36478–76–9			
Urea, N-ethyl-N-nitroso-	759–73–9	4	U176	1 (0.454)
Urea, N-methyl-N-nitroso-	684–93–5	3,4	U177	1 (0.454)
Urethane	51–79–6	3,4	U238	100 (45.4)
Vanadic acid, ammonium salt	7803–55–6	4	P119	1000 (454)
Vanadium oxide V2O5	1314–62–1	1,4	P120	1000 (454)
Vanadium pentoxide	1314–62–1	1,4	P120	1000 (454)
Vanadyl sulfate	27774–13–6	1		1000 (454)
Vinyl acetate	108–05–4	1,3		5000 (2270)
Vinyl acetate monomer	108–05–4	1,3		5000 (2270)
Vinylamine, N-methyl-N-nitroso-	4549–40–0	4	P084	10 (4.54)
Vinyl bromide	593–60–2	3		100 (45.4)
Vinyl chloride	75–01–4	2,3,4	U043	1 (0.454)
Vinylidene chloride	75–35–4	1,2,3,4	U078	100 (45.4)
Warfarin, & salts	81–81–2	4	P001, U248	100 (45.4)
Xylene	1330–20–7	1,3,4	U239	100 (45.4)
m-Xylene	108–38–3	3		1000 (454)
o-Xylene	95–47–6	3		1000 (454)
p-Xylene	106–42–3	3		100 (45.4)
Xylene (mixed)	1330–20–7	1,3,4	U239	100 (45.4)
Xylenes (isomers and mixture)	1330–20–7	1,3,4	U239	100 (45.4)
Xylenol	1300–71–6	1		1000 (454)
Yohimban-16-carboxylic acid,11,17-dimethoxy-18-[(3,4,5-trimethoxybenzoyl)oxy]-, methyl ester (3beta,16beta,17alpha, 18beta,20alpha).	50–55–54	4	U200	5000 (2270)
Zinc††	7440–66–6	2		1000 (454)
ZINC AND COMPOUNDS	N.A.	2		**

TABLE 302.4—LIST OF HAZARDOUS SUBSTANCES AND REPORTABLE QUANTITIES—Continued

[Note: All Comments/Notes Are Located at the End of This Table]

Hazardous substance	CASRN	Statutory code†	RCRA waste No.	Final RQ pounds (Kg)
Zinc acetate	557–34–6	1		1000 (454)
Zinc ammonium chloride	52628–25–8 14639–97–5 14639–98–6	1		1000 (454)
Zinc, bis(dimethylcarbamodithioato-S,S')-	137304	4	P205	10 (4.54)
Zinc borate	1332–07–6	1		1000 (454)
Zinc bromide	7699–45–8	1		1000 (454)
Zinc carbonate	3486–35–9	1		1000 (454)
Zinc chloride	7646–85–7	1		1000 (454)
Zinc cyanide Zn(CN)2	557–21–1	1,4	P121	10 (4.54)
Zinc fluoride	7783–49–5	1		1000 (454)
Zinc formate	557–41–5	1		1000 (454)
Zinc hydrosulfite	7779–86–4	1		1000 (454)
Zinc nitrate	7779–88–6	1		1000 (454)
Zinc phenolsulfonate	127–82–2	1		5000 (2270)
Zinc phosphide Zn3P2	1314–84–7	1,4	P122, U249	100 (45.4)
Zinc silicofluoride	16871–71–9	1		5000 (2270)
Zinc sulfate	7733–02–0	1		1000 (454)
Ziram	137304	4	P205	10 (4.54)
Zirconium nitrate	13746–89–9	1		5000 (2270)
Zirconium potassium fluoride	16923–95–8	1		1000 (454)
Zirconium sulfate	14644–61–2	1		5000 (2270)
Zirconium tetrachloride	10026–11–6	1		5000 (2270)
F001		4	F001	10 (4.54)
The following spent halogenated solvents used in degreasing; all spent solvent mixtures/blends used in degreasing containing, before use, a total of ten percent or more (by volume) of one or more of the halogenated solvents listed below or those solvents listed in F002, F004, and F005; and still bottoms from the recovery of these spent solvents and spent solvent mixtures.				
(a) Tetrachloroethylene	127–18–4	2,3,4	U210	100 (45.4)
(b) Trichloroethylene	79–01–6	1,2,3,4	U228	100 (45.4)
(c) Methylene chloride	75–09–2	2,3,4	U080	1000 (454)
(d) 1,1,1-Trichloroethane	71–55–6	2,3,4	U226	1000 (454)
(e) Carbon tetrachloride	56–23–5	1,2,3,4	U211	10 (4.54)
(f) Chlorinated fluorocarbons	N.A.			5000 (2270)
F002		4	F002	10 (4.54)
The following spent halogenated solvents; all spent solvent mixtures/blends containing, before use, a total of ten percent or more (by volume) of one or more of the halogenated solvents listed below or those solvents listed in F001, F004, or F005; and still bottoms from the recovery of these spent solvents and spent solvent mixtures.				
(a) Tetrachloroethylene	127–18–4	2,3,4	U210	100 (45.4)
(b) Methylene chloride	75–09–2	2,3,4	U080	1000 (454)
(c) Trichloroethylene	79–01–6	1,2,3,4	U228	100 (45.4)
(d) 1,1,1-Trichloroethane	71–55–6	2,3,4	U226	1000 (454)
(e) Chlorobenzene	108–90–7	1,2,3,4	U037	100 (45.4)
(f) 1,1,2-Trichloro-1,2,2-trifluoroethane	76–13–1			5000 (2270)
(g) o-Dichlorobenzene	95–50–1	1,2,4	U070	100 (45.4)
(h) Trichlorofluoromethane	75–69–4	4	U121	5000 (2270)
(i) 1,1,2-Trichloroethane	79–00–5	2,3,4	U227	100 (45.4)
F003		4	F003	100 (45.4)
The following spent non-halogenated solvents and the still bottoms from the recovery of these solvents.				
(a) Xylene	1330-20–7			1000 (454)
(b) Acetone	67–64–1			5000 (2270)
(c) Ethyl acetate	141–78–6			5000 (2270)
(d) Ethylbenzene	100–41–4			1000 (454)
(e) Ethyl ether	60–29–7			100 (45.4)
(f) Methyl isobutyl ketone	108–10–1			5000 (2270)
(g) n-Butyl alcohol	71–36–3			5000 (2270)
(h) Cyclohexanone	108–94–1			5000 (2270)
(i) Methanol	67–56–1			5000 (2270)
F004		4	F004	100 (45.4)
The following spent non-halogenated solvents and the still bottoms from the recovery of these solvents:				
(a) Cresols/Cresylic acid	1319–77–3	1,3,4	U052	100 (45.4)

TABLE 302.4—LIST OF HAZARDOUS SUBSTANCES AND REPORTABLE QUANTITIES—Continued

[Note: All Comments/Notes Are Located at the End of This Table]

Hazardous substance	CASRN	Statutory code†	RCRA waste No.	Final RQ pounds (Kg)
(b) Nitrobenzene	98–95–3	1,2,3,4	U169	1000 (454)
F005		4	F005	100 (45.4)
The following spent non-halogenated solvents and the still bottoms from the recovery of these solvents:				
(a) Toluene	108–88–3	1,2,3,4	U220	1000 (454)
(b) Methyl ethyl ketone	78–93–3	3,4	U159	5000 (2270)
(c) Carbon disulfide	75–15–0	1,3,4	P022	100 (45.4)
(d) Isobutanol	78–83–1	4	U140	5000 (2270)
(e) Pyridine	110–86–1	4	U196	1000 (454)
F006		4	F006	10 (4.54)
Wastewater treatment sludges from electroplating operations except from the following processes: (1) sulfuric acid anodizing of aluminum, (2) tin plating on carbon steel, (3) zinc plating (segregated basis) on carbon steel, (4) aluminum or zinc-aluminum plating on carbon steel, (5) cleaning/stripping associated with tin, zinc and aluminum plating on carbon steel, and (6) chemical etching and milling of aluminum.				
F007		4	F007	10 (4.54)
Spent cyanide plating bath solutions from electroplating operations.				
F008		4	F008	10 (4.54)
Plating bath residues from the bottom of plating baths from electroplating operations where cyanides are used in the process.				
F009		4	F009	10 (4.54)
Spent stripping and cleaning bath solutions from electroplating operations where cyanides are used in the process.				
F010		4	F010	10 (4.54)
Quenching bath residues from oil baths from metal heat treating operations where cyanides are used in the process.				
F011		4	F011	10 (4.54)
Spent cyanide solutions from salt bath pot cleaning from metal heat treating operations.				
F012		4	F012	10 (4.54)
Quenching wastewater treatment sludges from metal heat treating operations where cyanides are used in the process.				
F019		4	F019	10 (4.54)
Wastewater treatment sludges from the chemical conversion coating of aluminum except from zirconium phosphating in aluminum can washing when such phosphating is an exclusive conversion coating process. Wastewater treatment sludges from the manufacturing of motor vehicles using a zinc phosphating process will not be subject to this listing at the point of generation if the wastes are not placed outside on the land prior to shipment to a landfill for disposal and are either: disposed in a Subtitle D municipal or industrial landfill unit that is equipped with a single clay liner and is permitted, licensed or otherwise authorized by the state; or disposed in a landfill unit subject to, or otherwise meeting, the landfill requirements in § 258.40, § 264.301 or § 265.301. For the purposes of this listing, motor vehicle manufacturing is defined in § 261.31(b)(4)(i) and § 261.31(b)(4)(ii) describes the recordkeeping requirements for motor vehicle manufacturing facilities				
F020		4	F020	1 (0.454)
Wastes (except wastewater and spent carbon from hydrogen chloride purification) from the production or manufacturing use (as a reactant, chemical intermediate, or component in a formulating process) of tri- or tetrachlorophenol or of intermediates used to produce their pesticide derivatives. (This listing does not include wastes from the production of hexachlorophene from highly purified 2,4,5-trichlorophenol.)				
F021		4	F021	1 (0.454)

TABLE 302.4—LIST OF HAZARDOUS SUBSTANCES AND REPORTABLE QUANTITIES—Continued

[Note: All Comments/Notes Are Located at the End of This Table]

Hazardous substance	CASRN	Statutory code†	RCRA waste No.	Final RQ pounds (Kg)
Wastes (except wastewater and spent carbon from hydrogen chloride purification) from the production or manufacturing use (as a reactant, chemical intermediate, or component in a formulating process) of pentachlorophenol or of intermediates used to produce its derivatives.				
F022	.....	4	F022	1 (0.454)
Wastes (except wastewater and spent carbon from hydrogen chloride purification) from the manufacturing use (as a reactant, chemical intermediate, or component in a formulating process) of tetra-, penta-, or hexachlorobenzenes under alkaline conditions.				
F023	.....	4	F023	1 (0.454)
Wastes (except wastewater and spent carbon from hydrogen chloride purification) from the production of materials on equipment previously used for the production or manufacturing use (as a reactant, chemical intermediate, or a component in a formulating process) of tri- and tetrachlorophenols. (This listing does not include wastes from equipment used only for the production or use of hexachlorophene from highly purified 2,4,5-trichlorophenol.)				
F024	.....	4	F024	1 (0.454)
Process wastes, including but not limited to, distillation residues, heavy ends, tars, and reactor clean-out wastes, from the production of certain chlorinated aliphatic hydrocarbons by free radical catalyzed processes. These chlorinated aliphatic hydrocarbons are those having carbon chain lengths ranging from one to and including five, with varying amounts and positions of chlorine substitution. (This listing does not include wastewaters, wastewater treatment sludges, spent catalysts, and wastes listed in 40 CFR 261.31 or 261.32.)				
F025	.....	4	F025	1 (0.454)
Condensed light ends, spent filters and filter aids, and spent desiccant wastes from the production of certain chlorinated aliphatic hydrocarbons, by free radical catalyzed processes. These chlorinated aliphatic hydrocarbons are those having carbon chain lengths ranging from one to and including five, with varying amounts and positions of chlorine substitution.				
F026	.....	4	F026	1 (0.454)
Wastes (except wastewater and spent carbon from hydrogen chloride purification) from the production of materials on equipment previously used for the manufacturing use (as a reactant, chemical intermediate, or component in a formulating process) of tetra-, penta-, or hexachlorobenzene under alkaline conditions.				
F027	.....	4	F027	1 (0.454)
Discarded unused formulations containing tri-, tetra-, or pentachlorophenol or discarded unused formulations containing compounds derived from these chlorophenols. (This listing does not include formulations containing hexachlorophene synthesized from prepurified 2,4,5- trichlorophenol as the sole component.)				
F028	.....	4	F028	1 (0.454)
Residues resulting from the incineration or thermal treatment of soil contaminated with EPA Hazardous Waste Nos. F020, F021, F022, F023, F026, and F027.				
F032	.....	4	F032	1 (0.454)

TABLE 302.4—LIST OF HAZARDOUS SUBSTANCES AND REPORTABLE QUANTITIES—Continued

[Note: All Comments/Notes Are Located at the End of This Table]

Hazardous substance	CASRN	Statutory code†	RCRA waste No.	Final RQ pounds (Kg)
Wastewaters (except those that have not come into contact with process contaminants), process residuals, preservative drippage, and spent formulations from wood preserving processes generated at plants that currently use or have previously used chlorophenolic formulations (except potentially cross-contaminated wastes that have had the F032 waste code deleted in accordance with § 261.35 of this chapter or potentially cross-contaminated wastes that are otherwise currently regulated as hazardous wastes (*i.e.*, F034 or F035), and where the generator does not resume or initiate use of chlorophenolic formulations). This listing does not include K001 bottom sediment sludge from the treatment of wastewater from wood preserving processes that use creosote and/or pentachlorophenol.				
F034	.....	4	F034	1 (0.454)
Wastewaters (except those that have not come into contact with process contaminants), process residuals, preservative drippage, and spent formulations from wood preserving processes generated at plants that use creosote formulations. This listing does not include K001 bottom sediment sludge from the treatment of wastewater from wood preserving processes that use creosote and/or pentachlorophenol.				
F035	.....	4	F035	1 (0.454)
Wastewaters (except those that have not come into contact with process contaminants), process residuals, preservative drippage, and spent formulations from wood preserving processes generated at plants that use inorganic preservatives containing arsenic or chromium. This listing does not include K001 bottom sediment sludge from the treatment of wastewater from wood preserving processes that use creosote and/or pentachlorophenol.				
F037	.....	4	F037	1 (0.454)
Petroleum refinery primary oil/water/solids separation sludge-Any sludge generated from the gravitational separation of oil/water/solids during the storage or treatment of process wastewaters and oily cooling wastewaters from petroleum refineries. Such sludges include, but are not limited to those generated in oil/water/solids separators; tanks and impoundments; ditches and other conveyances; sumps; and stormwater units receiving dry weather flow. Sludges generated in stormwater units that do not receive dry weather flow, sludges generated from non-contact once-through cooling waters segregated for treatment from other process or oily cooling waters, sludges generated in aggressive biological treatment units as defined in § 261.31(b)(2) (including sludges generated in one or more additional units after wastewaters have been treated in aggressive biological treatment units) and K051 wastes are not included in this listing. This listing does include residuals generated from processing or recycling oil-bearing hazardous secondary materials excluded under § 261.4(a)(12)(i), if those residuals are to be disposed of.				
F038	.....	4	F038	1 (0.454)

TABLE 302.4—LIST OF HAZARDOUS SUBSTANCES AND REPORTABLE QUANTITIES—Continued

[Note: All Comments/Notes Are Located at the End of This Table]

Hazardous substance	CASRN	Statutory code†	RCRA waste No.	Final RQ pounds (Kg)
Petroleum refinery secondary (emulsified) oil/water/solids separation sludge-Any sludge and/or float generated from the physical and/or chemical separation of oil/water/solids in process wastewaters and oily cooling wastewaters from petroleum refineries. Such wastes include, but are not limited to, all sludges and floats generated in: induced air flotation (IAF) units, tanks and impoundments, and all sludges generated in DAF units. Sludges generated in stormwater units that do not receive dry weather flow, sludges generated from non-contact once-through cooling waters segregated for treatment from other process or oily cooling waters, sludges and floats generated in aggressive biological treatment units as defined in § 261.31(b)(2) (including sludges and floats generated in one or more additional units after wastewaters have been treated in aggressive biological treatment units) and F037, K048, and K051 wastes are not included in this listing.				
F039		4	F039	1 (0.454)
Leachate (liquids that have percolated through land disposed wastes) resulting from the disposal of more than one restricted waste classified as hazardous under subpart D of 40 CFR part 261. (Leachate resulting from the disposal of one or more of the following EPA Hazardous Wastes and no other hazardous wastes retains its EPA Hazardous Waste Number(s): F020, F021, F022, F026, F027, and/or F028.)				
K001		4	K001	1 (0.454)
Bottom sediment sludge from the treatment of wastewaters from wood preserving processes that use creosote and/or pentachlorophenol.				
K002		4	K002	10 (4.54)
Wastewater treatment sludge from the production of chrome yellow and orange pigments.				
K003		4	K003	10 (4.54)
Wastewater treatment sludge from the production of molybdate orange pigments.				
K004		4	K004	10 (4.54)
Wastewater treatment sludge from the production of zinc yellow pigments.				
K005		4	K005	10 (4.54)
Wastewater treatment sludge from the production of chrome green pigments.				
K006		4	K006	10 (4.54)
Wastewater treatment sludge from the production of chrome oxide green pigments (anhydrous and hydrated).				
K007		4	K007	10 (4.54)
Wastewater treatment sludge from the production of iron blue pigments.				
K008		4	K008	10 (4.54)
Oven residue from the production of chrome oxide green pigments.				
K009		4	K009	10 (4.54)
Distillation bottoms from the production of acetaldehyde from ethylene.				
K010		4	K010	10 (4.54)
Distillation side cuts from the production of acetaldehyde from ethylene.				
K011		4	K011	10 (4.54)
Bottom stream from the wastewater stripper in the production of acrylonitrile.				
K013		4	K013	10 (4.54)
Bottom stream from the acetonitrile column in the production of acrylonitrile.				
K014		4	K014	5000 (2270)
Bottoms from the acetonitrile purification column in the production of acrylonitrile.				
K015		4	K015	10 (4.54)

TABLE 302.4—LIST OF HAZARDOUS SUBSTANCES AND REPORTABLE QUANTITIES—Continued

[Note: All Comments/Notes Are Located at the End of This Table]

Hazardous substance	CASRN	Statutory code†	RCRA waste No.	Final RQ pounds (Kg)
Still bottoms from the distillation of benzyl chloride.				
K016		4	K016	1 (0.454)
Heavy ends or distillation residues from the production of carbon tetrachloride.				
K017		4	K017	10 (4.54)
Heavy ends (still bottoms) from the purification column in the production of epichlorohydrin.				
K018		4	K018	1 (0.454)
Heavy ends from the fractionation column in ethyl chloride production.				
K019		4	K019	1 (0.454)
Heavy ends from the distillation of ethylene dichloride in ethylene dichloride production.				
K020		4	K020	1 (0.454)
Heavy ends from the distillation of vinyl chloride in vinyl chloride monomer production.				
K021		4	K021	10 (4.54)
Aqueous spent antimony catalyst waste from fluoromethanes production.				
K022		4	K022	1 (0.454)
Distillation bottom tars from the production of phenol/acetone from cumene.				
K023		4	K023	5000 (2270)
Distillation light ends from the production of phthalic anhydride from naphthalene.				
K024		4	K024	5000 (2270)
Distillation bottoms from the production of phthalic anhydride from naphthalene.				
K025		4	K025	10 (4.54)
Distillation bottoms from the production of nitrobenzene by the nitration of benzene.				
K026		4	K026	1000 (454)
Stripping still tails from the production of methyl ethyl pyridines.				
K027		4	K027	10 (4.54)
Centrifuge and distillation residues from toluene diisocyanate production.				
K028		4	K028	1 (0.454)
Spent catalyst from the hydrochlorinator reactor in the production of 1,1,1-trichloroethane.				
K029		4	K029	1 (0.454)
Waste from the product steam stripper in the production of 1,1,1- trichloroethane.				
K030		4	K030	1 (0.454)
Column bottoms or heavy ends from the combined production of trichloroethylene and perchloroethylene.				
K031		4	K031	1 (0.454)
By-product salts generated in the production of MSMA and cacodylic acid.				
K032		4	K032	10 (4.54)
Wastewater treatment sludge from the production of chlordane.				
K033		4	K033	10 (4.54)
Wastewater and scrub water from the chlorination of cyclopentadiene in the production of chlordane.				
K034		4	K034	10 (4.54)
Filter solids from the filtration of hexachlorocyclopentadiene in the production of chlordane.				
K035		4	K035	1 (0.454)
Wastewater treatment sludges generated in the production of creosote.				
K036		4	K036	1 (0.454)
Still bottoms from toluene reclamation distillation in the production of disulfoton.				
K037		4	K037	1 (0.454)
Wastewater treatment sludges from the production of disulfoton.				
K038		4	K038	10 (4.54)

TABLE 302.4—LIST OF HAZARDOUS SUBSTANCES AND REPORTABLE QUANTITIES—Continued

[Note: All Comments/Notes Are Located at the End of This Table]

Hazardous substance	CASRN	Statutory code†	RCRA waste No.	Final RQ pounds (Kg)
Wastewater from the washing and stripping of phorate production.				
K039		4	K039	10 (4.54)
Filter cake from the filtration of diethylphosphorodithioic acid in the production of phorate.				
K040		4	K040	10 (4.54)
Wastewater treatment sludge from the production of phorate.				
K041		4	K041	1 (0.454)
Wastewater treatment sludge from the production of toxaphene.				
K042		4	K042	10 (4.54)
Heavy ends or distillation residues from the distillation of tetrachlorobenzene in the production of 2,4,5-T.				
K043		4	K043	10 (4.54)
2,6-Dichlorophenol waste from the production of 2,4-D.				
K044		4	K044	10 (4.54)
Wastewater treatment sludges from the manufacturing and processing of explosives.				
K045		4	K045	10 (4.54)
Spent carbon from the treatment of wastewater containing explosives.				
K046		4	K046	10 (4.54)
Wastewater treatment sludges from the manufacturing, formulation and loading of lead-based initiating compounds.				
K047		4	K047	10 (4.54)
Pink/red water from TNT operations.				
K048		4	K048	10 (4.54)
Dissolved air flotation (DAF) float from the petroleum refining industry.				
K049		4	K049	10 (4.54)
Slop oil emulsion solids from the petroleum refining industry.				
K050		4	K050	10 (4.54)
Heat exchanger bundle cleaning sludge from the petroleum refining industry.				
K051		4	K051	10 (4.54)
API separator sludge from the petroleum refining industry.				
K052		4	K052	10 (4.54)
Tank bottoms (leaded) from the petroleum refining industry.				
K060		4	K060	1 (0.454)
Ammonia still lime sludge from coking operations.				
K061		4	K061	10 (4.54)
Emission control dust/sludge from the primary production of steel in electric furnaces.				
K062		4	K062	10 (4.54)
Spent pickle liquor generated by steel finishing operations of facilities within the iron and steel industry (SIC Codes 331 and 332).				
K064		4	K064	10 (4.54)
Acid plant blowdown slurry/sludge resulting from the thickening of blowdown slurry from primary copper production.				
K065		4	K065	10 (4.54)
Surface impoundment solids contained in and dredged from surface impoundments at primary lead smelting facilities.				
K066		4	K066	10 (4.54)
Sludge from treatment of process wastewater and/or acid plant blowdown from primary zinc production.				
K069		4	K069	10 (4.54)

TABLE 302.4—LIST OF HAZARDOUS SUBSTANCES AND REPORTABLE QUANTITIES—Continued

[Note: All Comments/Notes Are Located at the End of This Table]

Hazardous substance	CASRN	Statutory code†	RCRA waste No.	Final RQ pounds (Kg)
Emission control dust/sludge from secondary lead smelting. (Note: This listing is stayed administratively for sludge generated from secondary acid scrubber systems. The stay will remain in effect until further administrative action is taken. If EPA takes further action effecting the stay, EPA will publish a notice of the action in the FEDERAL REGISTER.)				
K071	.....	4	K071	1 (0.454)
Brine purification muds from the mercury cell process in chlorine production, where separately prepurified brine is not used.				
K073	.....	4	K073	10 (4.54)
Chlorinated hydrocarbon waste from the purification step of the diaphragm cellprocess using graphite anodes in chlorine production.				
K083	.....	4	K083	100 (45.4)
Distillation bottoms from aniline production.				
K084	.....	4	K084	1 (0.454)
Wastewater treatment sludges generated during the production of veterinary pharmaceuticals from arsenic or organo-arsenic compounds.				
K085	.....	4	K085	10 (4.54)
Distillation or fractionation column bottoms from the production of chlorobenzenes.				
K086	.....	4	K086	10 (4.54)
Solvent washes and sludges, caustic washes and sludges, or water washes and sludges from cleaning tubs and equipment used in the formulation of ink from pigments, driers, soaps, and stabilizers containing chromium and lead.				
K087	.....	4	K087	100 (45.4)
Decanter tank tar sludge from coking operations.				
K088	.....	4	K088	10 (4.54)
Spent potliners from primary aluminum reduction.				
K090	.....	4	K090	10 (4.54)
Emission control dust or sludge from ferrochromiumsilicon production.				
K091	.....	4	K091	10 (4.54)
Emission control dust or sludge from ferrochromium production.				
K093	.....	4	K093	5000 (2270)
Distillation light ends from the production of phthalic anhydride from ortho-xylene.				
K094	.....	4	K094	5000 (2270)
Distillation bottoms from the production of phthalic anhydride from ortho-xylene.				
K095	.....	4	K095	100 (45.4)
Distillation bottoms from the production of 1,1,1-trichloroethane.				
K096	.....	4	K096	100 (45.4)
Heavy ends from the heavy ends column from the production of 1,1,1-trichloroethane.				
K097	.....	4	K097	1 (0.454)
Vacuum stripper discharge from the chlordane chlorinator in the production of chlordane.				
K098	.....	4	K098	1 (0.454)
Untreated process wastewater from the production of toxaphene.				
K099	.....	4	K099	10 (4.54)
Untreated wastewater from the production of 2,4-D.				
K100	.....	4	K100	10 (4.54)
Waste leaching solution from acid leaching of emission control dust/sludge from secondary lead smelting.				
K101	.....	4	K101	1 (0.454)
Distillation tar residues from the distillation of aniline-based compounds in the production of veterinary pharmaceuticals from arsenic or organo-arsenic compounds.				
K102	.....	4	K102	1 (0.454)

TABLE 302.4—LIST OF HAZARDOUS SUBSTANCES AND REPORTABLE QUANTITIES—Continued

[Note: All Comments/Notes Are Located at the End of This Table]

Hazardous substance	CASRN	Statutory code†	RCRA waste No.	Final RQ pounds (Kg)
Residue from the use of activated carbon for decolorization in the production of veterinary pharmaceuticals from arsenic or organo-arsenic compounds.				
K103		4	K103	100 (45.4)
Process residues from aniline extraction from the production of aniline.				
K104		4	K104	10 (4.54)
Combined wastewater streams generated from nitrobenzene/aniline production.				
K105		4	K105	10 (4.54)
Separated aqueous stream from the reactor product washing step in the production of chlorobenzenes.				
K106		4	K106	1 (0.454)
Wastewater treatment sludge from the mercury cell process in chlorine production.				
K107		4	K107	10 (4.54)
Column bottoms from product separation from the production of 1,1- dimethylhydrazine (UDMH) from carboxylic acid hydrazines.				
K108		4	K108	10 (4.54)
Condensed column overheads from product separation and condensed reactor vent gases from the production of 1,1- dimethylhydrazine (UDMH) from carboxylic acid hydrazides.				
K109		4	K109	10 (4.54)
Spent filter cartridges from product purification from the production of 1,1-dimethylhydrazine (UDMH) from carboxylic acid hydrazides.				
K110		4	K110	10 (4.54)
Condensed column overheads from intermediate separation from the production of 1,1- dimethylhydrazine (UDMH) from carboxylic acid hydrazides.				
K111		4	K111	10 (4.54)
Product washwaters from the production of dinitrotoluene via nitration of toluene.				
K112		4	K112	10 (4.54)
Reaction by-product water from the drying column in the production of toluenediamine via hydrogenation of dinitrotoluene.				
K113		4	K113	10 (4.54)
Condensed liquid light ends from the purification of toluenediamine in the production of toluenediamine via hydrogenation of dinitrotoluene.				
K114		4	K114	10 (4.54)
Vicinals from the purification of toluenediamine in the production of toluenediamine via hydrogenation of dinitrotoluene.				
K115		4	K115	10 (4.54)
Heavy ends from the purification of toluenediamine in the production of toluenediamine via hydrogenation of dinitrotoluene.				
K116		4	K116	10 (4.54)
Organic condensate from the solvent recovery column in the production of toluene diisocyanate via phosgenation of toluenediamine.				
K117		4	K117	1 (0.454)
Wastewater from the reactor vent gas scrubber in the production of ethylene dibromide via bromination of ethene.				
K118		4	K118	1 (0.454)
Spent adsorbent solids from purification of ethylene dibromide in the production of ethylene dibromide via bromination of ethene.				
K123		4	K123	10 (4.54)
Process wastewater (including supernates, filtrates, and washwaters) from the production of ethylenebisdithiocarbamic acid and its salts.				
K124		4	K124	10 (4.54)

TABLE 302.4—LIST OF HAZARDOUS SUBSTANCES AND REPORTABLE QUANTITIES—Continued

[Note: All Comments/Notes Are Located at the End of This Table]

Hazardous substance	CASRN	Statutory code†	RCRA waste No.	Final RQ pounds (Kg)
Reactor vent scrubber water from the production of ethylenebisdithiocarbamic acid and its salts.				
K125	.....	4	K125	10 (4.54)
Filtration, evaporation, and centrifugation solids from the production of ethylenebisdithiocarbamic acid and its salts.				
K126	.....	4	K126	10 (4.54)
Baghouse dust and floor sweepings in milling and packaging operations from the production or formulation of ethylenebisdithiocarbamic acid and its salts.				
K131	.....	4	K131	100 (45.4)
Wastewater from the reactor and spent sulfuric acid from the acid dryer from the production of methyl bromide.				
K132	.....	4	K132	1000 (454)
Spent absorbent and wastewater separator solids from the production of methyl bromide.				
K136	.....	4	K136	1 (0.454)
Still bottoms from the purification of ethylene dibromide in the production of ethylene dibromide via bromination of ethene.				
K141	.....	4	K141	1 (0.454)
Process residues from the recovery of coal tar, including, but not limited to, collecting sump residues from the production of coke from coal or the recovery of coke by-products produced from coal. This listing does not include K087 (decanter tank tar sludges from coking operations).				
K142	.....	4	K142	1 (0.454)
Tar storage tank residues from the production of coke from coal or from the recovery of coke by-products produced from coal.				
K143	.....	4	K143	1 (0.454)
Process residues from the recovery of light oil, including, but not limited to, those generated in stills, decanters, and wash oil recovery units from the recovery of coke by- products produced from coal.				
K144	.....	4	K144	1 (0.454)
Wastewater sump residues from light oil refining, including, but not limited to, intercepting or contamination sump sludges from the recovery of coke by-products produced from coal.				
K145	.....	4	K145	1 (0.454)
Residues from naphthalene collection and recovery operations from the recovery of coke by-products produced from coal.				
K147	.....	4	K147	1 (0.454)
Tar storage tank residues from coal tar refining.				
K148	.....	4	K148	1 (0.454)
Residues from coal tar distillation, including, but not limited to, still bottoms.				
K149	.....	4	K149	10 (4.54)
Distillation bottoms from the production of alpha-(or methyl-) chlorinated toluenes, ring-chlorinated toluenes, benzoyl chlorides, and compounds with mixtures of these functional groups. [This waste does not include still bottoms from the distillation of benzyl chloride.]				
K150	.....	4	K150	10 (4.54)
Organic residuals, excluding spent carbon adsorbent, from the spent chlorine gas and hydrochloric acid recovery processes associated with the production of alpha- (or methyl-) chlorinated toluenes, ring-chlorinated toluenes, benzoyl chlorides, and compounds with mixtures of these functional groups.				
K151	.....	4	K151	10 (4.54)

TABLE 302.4—LIST OF HAZARDOUS SUBSTANCES AND REPORTABLE QUANTITIES—Continued

[Note: All Comments/Notes Are Located at the End of This Table]

Hazardous substance	CASRN	Statutory code†	RCRA waste No.	Final RQ pounds (Kg)
Wastewater treatment sludges, excluding neutralization and biological sludges, generated during the treatment of waste-waters from the production of alpha- (or methyl-) chlorinated toluenes, ring-chlorinated toluenes, benzoyl chlorides, and compounds with mixtures of these functional groups.				
K156		4	K156	10 (4.54)
Organic waste (including heavy ends, still bottoms, light ends, spent solvents, filtrates, and decantates) from the production of carbamates and carbamoyl oximes. (This listing does not apply to wastes generated from the manufacture of 3-iodo-2-propynyl n-butylcarbamate.)				
K157		4	K157	10 (4.54)
Wastewaters (including scrubber waters, condenser waters, washwaters, and separation waters) from the production of carbamates and carbamoyl oximes. (This listing does not apply to wastes generated from the manufacture of 3-iodo-2-propynyl n-butylcarbamate.)				
K158		4	K158	10 (4.54)
Bag house dusts and filter/separation solids from the production of carbamates and carbamoyl oximes. (This listing does not apply to wastes generated from the manufacture of 3-iodo-2-propynyl n-butylcarbamate.)				
K159		4	K159	10 (4.54)
Organics from the treatment of thiocarbamate wastes.				
K161		4	K161	1 (0.454)
Purification solids (including filtration, evaporation, and centrifugation solids), bag-house dust and floor sweepings from the production of dithiocarbamate acids and their salts. (This listing does not include K125 or K126).				
K169[f]		4	K169	10 (4.54)
Crude oil storage tank sediment from petroleum refining operations.				
K170[f]		4	K170	1 (0.454)
Clarified slurry oil tank sediment and/or in-line filter/separation solids from petroleum refining operations.				
K171[f]		4	K171	1 (0.454)
Spent hydrotreating catalyst from petroleum refining operations. (This listing does not include inert support media.)				
K172[f]		4	K172	1 (0.454)
Spent hydrorefining catalyst from petroleum refining operations. (This listing does not include inert support media.)				
K174[f]		4	K174	1 (0.454)
K175[f]		4	K175	1 (0.454)
K176.				
Baghouse filters from the production of antimony oxide, including filters from the production of intermediates (e.g., antimony metal or crude antimony oxide)		4	K176	1 (0.454)
K177.				
Slag from the production of antimony oxide that is speculatively accumulated or disposed, including slag from the production of intermediates (e.g., antimony metal or crude antimony oxide)		4	K177	5,000 (2270)
K178		4	K178	1000 (454)
Residues from manufacturing and manufacturing-site storage of ferric chloride from acids formed during the production of titanium dioxide using the chloride-ilmenite process.				
K181		4	K181	##

TABLE 302.4—LIST OF HAZARDOUS SUBSTANCES AND REPORTABLE QUANTITIES—Continued

[Note: All Comments/Notes Are Located at the End of This Table]

Hazardous substance	CASRN	Statutory code†	RCRA waste No.	Final RQ pounds (Kg)
Nonwastewaters from the production of dyes and/or pigments (including nonwastewaters commingled at the point of generation with nonwastewaters from other processes) that, at the point of generation, contain mass loadings of any of the constituents identified in paragraph (c) of section 261.32 that are equal to or greater than the corresponding paragraph (c) levels, as determined on a calendar year basis				

† Indicates the statutory source defined by 1, 2, 3, and 4, as described in the note preceding Table 302.4.

† Indicates the statutory source defined by 1,2,3, and 4, as described in the note preceding Table 302.4.

†† No reporting of releases of this hazardous substance is required if the diameter of the pieces of the solid metal released is larger than 100 micrometers (0.004 inches).

††† The RQ for asbestos is limited to friable forms only.

The Agency may adjust the statutory RQ for this hazardous substance in a future rulemaking; until then the statutory one-pound RQ applies.

§ The adjusted RQs for radionuclides may be found in appendix B to this table.

** Indicates that no RQ is being assigned to the generic or broad class.

[a] Benzene was already a CERCLA hazardous substance prior to the CAA Amendments of 1990 and received an adjusted 10-pound RQ based on potential carcinogenicity in an August 14, 1989, final rule (54 FR 33418). The CAA Amendments specify that "benzene (including benzene from gasoline)" is a hazardous air pollutant and, thus, a CERCLA hazardous substance.

[b] The CAA Amendments of 1990 list DDE (3547–04–4) as a CAA hazardous air pollutant. The CAS number, 3547–04–4, is for the chemical, p,p'dichlorodiphenylethane. DDE or p,p′-dichlorodiphenyldichloroethylene, CAS number 72–55–9, is already listed in Table 302.4 with a final RQ of 1 pound. The substance identified by the CAS number 3547–04–4 has been evaluated and listed as DDE to be consistent with the CAA section 112 listing, as amended.

[c] Includes mineral fiber emissions from facilities manufacturing or processing glass, rock, or slag fibers (or other mineral derived fibers) of average diameter 1 micrometer or less.

[d] Includes mono- and di-ethers of ethylene glycol, diethylene glycol, and triethylene glycol R-(OCH2CH2)n-OR′ where:

n = 1, 2, or 3;
R = alkyl C7 or less; or
R = phenyl or alkyl substituted phenyl;
R' = H or alkyl C7 or less; or
OR′ consisting of carboxylic acid ester, sulfate, phosphate, nitrate, or sulfonate.

[e] Includes organic compounds with more than one benzene ring, and which have a boiling point greater than or equal to 100 °C.

[f] See 40 CFR 302.6(b)(1) for application of the mixture rule to this hazardous waste.

APPENDIX A TO § 302.4—SEQUENTIAL CAS REGISTRY NUMBER LIST OF CERCLA HAZARDOUS SUBSTANCES

CASRN	Hazardous substance
50000	Formaldehyde.
50077	Azirino[2′,3′:3,4]pyrrolo[1,2-a]indole-4,7-dione,6-amino-8-[[(aminocarbonyl)oxy]methyl]-1,1a,2,8,8a, 8b-hexahydro-8a-methoxy-5-methyl-, [1aS-(1aalpha, 8beta,8aalpha,8balpha)]-
	Mitomycin C.
50180	Cyclophosphamide.
	2H-1,3,2-Oxazaphosphorin-2-amine, N,N-bis(2-chloroethyl)tetrahydro-, 2-oxide.
50293	Benzene, 1,1′-(2,2,2- trichloroethylidene)bis[4-chloro-.
	DDT.
	4,4′-DDT.
50328	Benzo[a]pyrene.
	3,4-Benzopyrene.
50555	Reserpine.
	Yohimban-16-carboxylic acid,11,17-dimethoxy-18-[(3 ,4,5-trimethoxybenzoyl)oxy]-, methyl ester (3beta, 16beta,17alpha,18beta,20alpha)- .
51285	Phenol, 2,4-dinitro-.
	2,4-Dinitrophenol.
51434	Epinephrine.
	1,2-Benzenediol,4-[1-hydroxy-2-(methylamino) ethyl]-.
51796	Carbamic acid, ethyl ester.
	Ethyl carbamate.
	Urethane.

APPENDIX A TO § 302.4—SEQUENTIAL CAS REGISTRY NUMBER LIST OF CERCLA HAZARDOUS SUBSTANCES—Continued

CASRN	Hazardous substance
52686	Trichlorfon.
52857	Famphur.
	Phosphorothioic acid, O-[4-[(dimethylamino) sulfonyl]phenyl] O,O-dimethyl ester.
53703	Dibenz[a,h]anthracene.
	Dibenzo[a,h]anthracene.
	1,2:5,6-Dibenzanthracene.
53963	Acetamide, N-9H-fluoren-2-yl-.
	2-Acetylaminofluorene.
54115	Nicotine, & salts.
	Pyridine, 3-(1-methyl-2-pyrrolidinyl)-, (S)-, & salts.
55185	Ethanamine, N-ethyl-N-nitroso-.
	N-Nitrosodiethylamine.
55630	Nitroglycerine.
	1,2,3-Propanetriol, trinitrate.
55914	Diisopropylfluorophosphate (DFP).
	Phosphorofluororidic acid, bis(1-methylethyl) ester.
56042	Methylthiouracil.
	4(1H)-Pyrimidinone, 2,3-dihydro-6-methyl-2-thioxo-.
56235	Carbon tetrachloride.
	Methane, tetrachloro-.
56382	Parathion.
	Phosphorothioic acid, O,O-diethyl O-(4-nitrophenyl) ester.
56495	Benz[j]aceanthrylene, 1,2-dihydro-3-methyl-.
	3-Methylcholanthrene.

APPENDIX A TO § 302.4—SEQUENTIAL CAS REGISTRY NUMBER LIST OF CERCLA HAZARDOUS SUBSTANCES—Continued

CASRN	Hazardous substance
56531	Diethylstilbestrol.
	Phenol, 4,4′-(1,2-diethyl-1,2-ethenediyl)bis-, (E).
56553	Benz[a]anthracene.
	Benzo[a]anthracene.
	1,2-Benzanthracene.
56724	Coumaphos.
57147	Hydrazine, 1,1-dimethyl-.
	1,1-Dimethylhydrazine.
57249	Strychnidin-10-one, & salts.
	Strychnine, & salts.
57476	Physostigmine.
	Pyrrolo[2,3-b]indol-5-ol, 1,2,3,3a,8,8a-hexahydro-1,3a,8-trimethyl-, methylcarbamate (ester), (3aS-cis)-.
57578	beta-Propiolactone.
57647	Benzoic acid, 2-hydroxy-, compd. with (3aS-cis)-1,2,3,3a,8,8a-hexahydro-1,3a,8-trimethylpyrrolo[2,3-b]indol-5-yl methylcarbamate ester (1:1).
	Physostigmine salicylate.
57749	Chlordane.
	Chlordane, alpha & gamma isomers.
	CHLORDANE (TECHNICAL MIXTURE AND METABOLITES).
	4,7-Methano-1H-indene, 1,2,4,5,6,7,8,8-octachloro-2,3,3a,4,7,7a-hexahydro-.
57976	Benz[a]anthracene, 7,12-dimethyl-.
	7,12-Dimethylbenz[a]anthracene.
58899	γ-BHC.
	Cyclohexane, 1,2,3,4,5,6-hexachloro-(1α,2α,3β,4α,5α,6β)-.
	Lindane.
	Lindane (all isomers).
58902	Phenol, 2,3,4,6-tetrachloro-.
	2,3,4,6-Tetrachlorophenol.
59507	p-Chloro-m-cresol.
	Phenol, 4-chloro-3-methyl-.
59892	N-Nitrosomorpholine.
60004	Ethylenediamine-tetraacetic acid (EDTA).
60117	Benzenamine, N,N-dimethyl-4-(phenylazo)-.
	Dimethyl aminoazobenzene.
	p-Dimethylaminoazobenzene.
60297	Ethane, 1,1′-oxybis-.
	Ethyl ether.
60344	Hydrazine, methyl-.
	Methyl hydrazine.
60355	Acetamide.
60515	Dimethoate.
	Phosphorodithioic acid, O,O-dimethyl S-[2(methylamino)-2-oxoethyl] ester.
60571	Dieldrin.
	2,7:3,6-Dimethanonaphth[2,3-b]oxirene, 3,4,5,6,9,9-hexachloro-1a,2, 2a,3,6,6a,7,7a-octahydro-, (1aalpha,2beta,2aalpha,3beta,6beta, 6aalpha,7beta, 7aalpha)-.
61825	Amitrole.
	1H-1,2,4-Triazol-3-amine.
62384	Mercury, (acetato-O)phenyl-.
	Phenylmercury acetate.
62442	Acetamide, N-(4-ethoxyphenyl)-.
	Phenacetin.
62500	Ethyl methanesulfonate.
	Methanesulfonic acid, ethyl ester.
62533	Aniline.
	Benzenamine.
62555	Ethanethioamide.
	Thioacetamide.
62566	Thiourea.
62737	Dichlorvos.

APPENDIX A TO § 302.4—SEQUENTIAL CAS REGISTRY NUMBER LIST OF CERCLA HAZARDOUS SUBSTANCES—Continued

CASRN	Hazardous substance
62748	Acetic acid, fluoro-, sodium salt.
	Fluoroacetic acid, sodium salt.
62759	Methanamine, N-methyl-N-nitroso-.
	N-Nitrosodimethylamine.
63252	Carbaryl.
	1-Naphthalenol, methylcarbamate.
64006	m-Cumenyl methylcarbamate.
	3-Isopropylphenyl N-methylcarbamate.
	Phenol, 3-(1-methylethyl)-, methyl carbamate.
64006	Phenol, 3-(1-methylethyl)-, methyl carbamate (m-Cumenyl methylcarbamate).
64186	Formic acid.
64197	Acetic acid.
64675	Diethyl sulfate.
65850	Benzoic acid.
66751	Uracil mustard.
	2,4-(1H,3H)-Pyrimidinedione, 5-[bis(2-chloroethyl) amino]-.
67561	Methanol.
	Methyl alcohol.
67641	Acetone.
	2-Propanone.
67663	Chloroform.
	Methane, trichloro-.
67721	Ethane, hexachloro-.
	Hexachloroethane.
68122	Dimethylformamide.
70257	Guanidine, N-methyl-N′-nitro-N-nitroso-.
	MNNG.
70304	Hexachlorophene.
	Phenol, 2,2′-methylenebis[3,4,6-tri- chloro-.
71363	n-Butyl alcohol.
	1-Butanol.
71432	Benzene.
71556	Ethane, 1,1,1-trichloro-.
	Methyl chloroform.
	1,1,1-Trichloroethane.
72208	Endrin.
	Endrin, & metabolites.
	2,7:3.6-Dimethanonaphth[2,3-b]oxirene,3,4,5,6,9,9-hexachloro-1a,2,2a,3,6,6a,7,7a-octahydro-, (1aalpha,2beta,2abeta,3alpha, 6alpha,6abeta,7beta,7aalpha)-, & metabolites.
72435	Benzene, 1,1′-(2,2,2-trichloroethylidene)bis[4-methoxy-.
	Methoxychlor.
72548	Benzene, 1,1′-(2,2-dichloroethylidene)bis[4-chloro-.
	DDD.
	TDE.
	4,4′-DDD.
72559	DDE
	4,4′-DDE.
72571	Trypan blue.
	2,7-Naphthalenedisulfonic acid, 3,3′-[(3,3′-dimethyl-(l,1′-biphenyl)-4,4′-diyl)-bis(azo)]bis(5-amino-4-hydroxy)-tetrasodium salt.
74839	Bromomethane.
	Methane, bromo-.
	Methyl bromide.
74873	Chloromethane.
	Methane, chloro-.
	Methyl chloride.
74884	Iodomethane
	Methane, iodo-.
	Methyl iodide.
74895	Monomethylamine.
74908	Hydrocyanic acid.
	Hydrogen cyanide.

APPENDIX A TO § 302.4—SEQUENTIAL CAS REGISTRY NUMBER LIST OF CERCLA HAZARDOUS SUBSTANCES—Continued

CASRN	Hazardous substance
74931	Methanethiol.
	Methyl mercaptan.
	Thiomethanol.
74953	Methane, dibromo-.
	Methylene bromide.
75003	Chloroethane.
	Ethyl chloride.
75014	Ethene, chloro-.
	Vinyl chloride.
75047	Monoethylamine.
75058	Acetonitrile.
75070	Acetaldehyde.
	Ethanal.
75092	Dichloromethane.
	Methane, dichloro-.
	Methylene chloride.
75150	Carbon disulfide.
75207	Calcium carbide.
75218	Ethylene oxide.
	Oxirane.
75252	Bromoform.
	Methane, tribromo-.
75274	Dichlorobromomethane.
75343	Ethane, 1,1-dichloro-.
	Ethylidene dichloride.
	1,1-Dichloroethane.
75354	Ethene, 1,1-dichloro-.
	Vinylidene chloride.
	1,1-Dichloroethylene.
75365	Acetyl chloride.
75445	Carbonic dichloride.
	Phosgene.
75503	Trimethylamine.
75558	Aziridine, 2-methyl-.
	2-Methyl aziridine.
	1,2-Propylenimine.
75569	Propylene oxide.
75605	Arsinic acid, dimethyl-.
	Cacodylic acid.
75649	tert-Butylamine.
75694	Methane, trichlorofluoro-.
	Trichloromonofluoromethane.
75718	Dichlorodifluoromethane.
	Methane, dichlorodifluoro-.
75865	Acetone cyanohydrin.
	Propanenitrile, 2-hydroxy-2-methyl-.
	2-Methyllactonitrile.
75876	Acetaldehyde, trichloro-.
	Chloral.
75990	2,2-Dichloropropionic acid.
76017	Ethane, pentachloro-.
	Pentachloroethane.
76448	Heptachlor.
	4,7-Methano-1H-indene, 1,4,5,6,7,8,8-heptachloro-3a,4,7,7a-tetrahydro-.
77474	Hexachlorocyclopentadiene.
	1,3-Cyclopentadiene, 1,2,3,4,5,5-hexa- chloro-.
77781	Dimethyl sulfate.
	Sulfuric acid, dimethyl ester.
78002	Plumbane, tetraethyl-.
	Tetraethyl lead.
78591	Isophorone.
78795	Isoprene.
78819	iso-Butylamine.
78831	Isobutyl alcohol.
	1-Propanol, 2-methyl-.
78875	Propane, 1,2-dichloro-.
	Propylene dichloride.
	1,2-Dichloropropane.
78886	2,3-Dichloropropene.

APPENDIX A TO § 302.4—SEQUENTIAL CAS REGISTRY NUMBER LIST OF CERCLA HAZARDOUS SUBSTANCES—Continued

CASRN	Hazardous substance
78933	2-Butanone.
	MEK.
	Methyl ethyl ketone.
78999	1,1-Dichloropropane.
79005	Ethane, 1,1,2-trichloro-.
	1,1,2-Trichloroethane.
79016	Ethene, trichloro-.
	Trichloroethylene.
79061	Acrylamide.
	2-Propenamide.
79094	Propionic acid.
79107	Acrylic acid.
	2-Propenoic acid.
79118	Chloroacetic acid.
79196	Hydrazinecarbothioamide.
	Thiosemicarbazide.
79221	Carbonochloridic acid, methyl ester.
	Methyl chlorocarbonate.
79312	iso-Butyric acid.
79345	Ethane, 1,1,2,2-tetrachloro-.
	1,1,2,2-Tetrachloroethane.
79447	Carbamic chloride, dimethyl-.
	Dimethylcarbamoyl chloride.
79469	Propane, 2-nitro-.
	2-Nitropropane.
80159	alpha,alpha-Dimethylbenzylhydroperoxide.
	Hydroperoxide, 1-methyl-1-phenylethyl-.
80626	Methyl methacrylate.
	2-Propenoic acid, 2-methyl-, methyl ester.
81812	Warfarin, & salts.
	2H-1-Benzopyran-2-one, 4-hydroxy-3-(3-oxo-1-phenylbutyl)-, & salts.
82688	Benzene, pentachloronitro-.
	PCNB.
	Pentachloronitrobenzene.
	Quintobenzene.
83329	Acenaphthene.
84662	Diethyl phthalate.
	1,2-Benzenedicarboxylic acid, diethyl ester.
84742	Di-n-butyl phthalate.
	Dibutyl phthalate.
	n-Butyl phthalate.
	1,2-Benzenedicarboxylic acid, dibutyl ester.
85007	Diquat.
85018	Phenanthrene.
85449	Phthalic anhydride.
	1,3-Isobenzofurandione.
85687	Butyl benzyl phthalate.
86306	N-Nitrosodiphenylamine.
86500	Guthion.
86737	Fluorene.
86884	alpha-Naphthylthiourea.
	Thiourea, 1-naphthalenyl-.
87650	Phenol, 2,6-dichloro-.
	2,6-Dichlorophenol.
87683	Hexachlorobutadiene.
	1,3-Butadiene, 1,1,2,3,4,4-hexachloro-.
87865	Pentachlorophenol.
	Phenol, pentachloro-.
88062	Phenol, 2,4,6-trichloro-.
	2,4,6-Trichlorophenol.
88722	o-Nitrotoluene.
88755	o-Nitrophenol.
	2-Nitrophenol.
88857	Dinoseb.
	Phenol, 2-(1-methylpropyl)-4,6-dinitro-.
90040	o-Anisidine.
91087	Benzene, 1,3-diisocyanatomethyl-.
	Toluene diisocyanate.
	2,4-Toluene diisocyanate.

APPENDIX A TO § 302.4—SEQUENTIAL CAS REGISTRY NUMBER LIST OF CERCLA HAZARDOUS SUBSTANCES—Continued

CASRN	Hazardous substance
91203	Naphthalene.
91225	Quinoline.
91587	beta-Chloronaphthalene.
	Naphthalene, 2-chloro-.
	2-Chloronaphthalene.
91598	beta-Naphthylamine.
	2-Naphthalenamine.
91667	N,N-Diethylaniline.
91805	Methapyrilene.
	1,2-Ethanediamine, N,N-dimethyl-N′-2-pyridinyl-N′- (2-thienylmethyl)-.
91941	[1,1′-Biphenyl]-4,4′-diamine,3,3′-dichloro-.
	3,3′-Dichlorobenzidine.
92524	Biphenyl.
92671	4-Aminobiphenyl.
92875	Benzidine.
	[1,1′-Biphenyl]-4,4′-diamine.
92933	4-Nitrobiphenyl.
	Propanoic acid, 2-(2,4,5-trichlorophenoxy)-.
	Silvex (2,4,5-TP).
	2,4,5-TP acid.
93765	Acetic acid, (2,4,5-trichlorophenoxy)-.
93721	2,4,5-T.
	2,4,5-T acid.
93798	2,4,5-T esters.
94111	2,4-D Ester.
94586	Dihydrosafrole.
	1,3-Benzodioxole, 5-propyl-.
94597	Safrole.
	1,3-Benzodioxole, 5-(2-propenyl)-.
94791	2,4-D Ester.
94804	2,4-D Ester.
95476	o-Xylene.
95487	o-Cresol.
95501	Benzene, 1,2-dichloro-.
	o-Dichlorobenzene.
	1,2-Dichlorobenzene.
95534	Benzenamine, 2-methyl-.
	o-Toluidine.
95578	o-Chlorophenol.
	Phenol, 2-chloro-.
	2-Chlorophenol.
95807	Benzenediamine, ar-methyl-.
	Toluenediamine.
	2,4-Toluene diamine.
95943	Benzene, 1,2,4,5-tetrachloro-.
	1,2,4,5-Tetrachlorobenzene.
95954	Phenol, 2,4,5-trichloro-.
	2,4,5-Trichlorophenol.
96093	Styrene oxide.
96128	Propane, 1,2-dibromo-3-chloro-.
	1,2-Dibromo-3-chloropropane.
96457	Ethylenethiourea.
	2-Imidazolidinethione.
97632	Ethyl methacrylate.
	2-Propenoic acid, 2-methyl-, ethyl ester.
98011	Furfural.
	2-Furancarboxaldehyde.
98077	Benzene, (trichloromethyl)-.
	Benzotrichloride.
98099	Benzenesulfonic acid chloride.
	Benzenesulfonyl chloride.
98828	Benzene, (1-methylethyl)-.
	Cumene.
98862	Acetophenone.
	Ethanone, 1-phenyl-.
98873	Benzal chloride.
	Benzene, (dichloromethyl)-.
98884	Benzoyl chloride.
98953	Benzene, nitro-.

APPENDIX A TO § 302.4—SEQUENTIAL CAS REGISTRY NUMBER LIST OF CERCLA HAZARDOUS SUBSTANCES—Continued

CASRN	Hazardous substance
	Nitrobenzene.
99081	m-Nitrotoluene.
99354	Benzene, 1,3,5-trinitro-.
	1,3,5-Trinitrobenzene.
99558	Benzenamine, 2-methyl-5-nitro-.
	5-Nitro-o-toluidine.
99650	m-Dinitrobenzene.
99990	p-Nitrotoluene.
100016	Benzenamine, 4-nitro-.
	p-Nitroaniline.
100027	p-Nitrophenol.
	Phenol, 4-nitro-.
	4-Nitrophenol.
100254	p-Dinitrobenzene.
100414	Ethylbenzene.
100425	Styrene.
100447	Benzene, (chloromethyl)-.
	Benzyl chloride.
100470	Benzonitrile.
100754	N-Nitrosopiperidine.
	Piperidine, 1-nitroso-.
101144	Benzenamine, 4,4′-methylenebis[2-chloro-.
	4,4′-Methylenebis(2-chloroaniline).
101279	Barban.
	Carbamic acid, (3-chlorophenyl)-, 4-chloro-2-butynyl ester.
101553	Benzene, 1-bromo-4-phenoxy-.
	4-Bromophenyl phenyl ether.
101688	MDI.
	Methylene diphenyl diisocyanate.
101779	4,4′-Methylenedianiline.
103855	Phenylthiourea.
	Thiourea, phenyl-.
105464	sec-Butyl acetate.
105679	Phenol, 2,4-dimethyl-.
	2,4-Dimethylphenol.
106423	p-Xylene.
106445	p-Cresol.
106467	Benzene, 1,4-dichloro-.
	p-Dichlorobenzene.
	1,4-Dichlorobenzene.
106478	Benzenamine, 4-chloro-.
	p-Chloroaniline.
106490	Benzenamine, 4-methyl-.
	p-Toluidine.
106503	p-Phenylenediamine.
106514	p-Benzoquinone.
	2,5-Cyclohexadiene-1,4-dione.
	Quinone.
106887	1,2-Epoxybutane.
106898	1-Chloro-2,3-epoxypropane.
	Epichlorohydrin.
	Oxirane, (chloromethyl)-.
106934	Dibromoethane.
	Ethane, 1,2-dibromo-.
	Ethylene dibromide.
106990	1,3-Butadiene.
107028	Acrolein.
	2-Propenal.
107051	Allyl chloride.
107062	Ethane, 1,2-dichloro-.
	Ethylene dichloride.
	1,2-Dichloroethane.
107108	n-Propylamine.
	1-Propanamine.
107120	Ethyl cyanide.
	Propanenitrile.
107131	Acrylonitrile.
	2-Propenenitrile.
107153	Ethylenediamine.

APPENDIX A TO § 302.4—SEQUENTIAL CAS REGISTRY NUMBER LIST OF CERCLA HAZARDOUS SUBSTANCES—Continued

CASRN	Hazardous substance
107186	Allyl alcohol.
	2-Propen-1-ol.
107197	Propargyl alcohol.
	2-Propyn-1-ol.
107200	Acetaldehyde, chloro-.
	Chloroacetaldehyde.
107211	Ethylene glycol.
107302	Chloromethyl methyl ether.
	Methane, chloromethoxy-.
107493	Diphosphoric acid, tetraethyl ester.
	Tetraethyl pyrophosphate.
107926	Butyric acid.
108054	Vinyl acetate.
	Vinyl acetate monomer.
108101	Hexone.
	Methyl isobutyl ketone.
	4-Methyl-2-pentanone.
108247	Acetic anhydride.
108316	Maleic anhydride.
	2,5-Furandione.
108383	m-Xylene.
108394	m-Cresol.
108463	Resorcinol.
	1,3-Benzenediol.
108601	Dichloroisopropyl ether.
	Propane, 2,2″-oxybis[2-chloro-.
108883	Benzene, methyl-.
	Toluene.
108907	Benzene, chloro-.
	Chlorobenzene.
108941	Cyclohexanone.
108952	Phenol.
108985	Benzenethiol.
	Thiophenol.
109068	Pyridine, 2-methyl-.
	2-Picoline.
109739	Butylamine.
109773	Malononitrile.
	Propanedinitrile.
109897	Diethylamine.
109999	Furan, tetrahydro-.
	Tetrahydrofuran.
110009	Furan.
	Furfuran.
110167	Maleic acid.
110178	Fumaric acid.
110190	iso-Butyl acetate.
110543	Hexane.
110758	Ethene, (2-chloroethoxy)-.
	2-Chloroethyl vinyl ether.
110805	Ethanol, 2-ethoxy-.
	Ethylene glycol monoethyl ether.
110827	Benzene, hexahydro-.
	Cyclohexane.
110861	Pyridine.
111422	Diethanolamine.
111444	Bis(2-chloroethyl) ether.
	Dichloroethyl ether.
	Ethane, 1,1′-oxybis[2-chloro-.
111546	Carbamodithioic acid, 1,2-ethanediylbis-, salts & esters.
	Ethylenebisdithiocarbamic acid, salts & esters.
111911	Bis(2-chloroethoxy) methane.
	Dichloromethoxyethane.
	Ethane, 1,1′-[methylenebis(oxy)]bis(2-chloro-.
114261	Phenol, 2-(1-methylethoxy)-, methylcarbamate.
	Propoxur (Baygon).
115026	Azaserine.
	L-Serine, diazoacetate (ester).
115297	Endosulfan.

APPENDIX A TO § 302.4—SEQUENTIAL CAS REGISTRY NUMBER LIST OF CERCLA HAZARDOUS SUBSTANCES—Continued

CASRN	Hazardous substance
	6,9-Methano-2,4,3-benzodioxathiepin, 6,7,8,9,10,10-hexachloro-1,5,5a,6,9,9a-hexahydro-, 3-oxide.
115322	Dicofol.
116063	Aldicarb.
	Propanal, 2-methyl-2-(methylthio)-, O-[(methylamino)carbonyl]oxime.
117806	Dichlone.
117817	1,2-Benzenedicarboxylic acid, bis(2-ethylhexyl) ester.
	Bis(2-ethylhexyl)phthalate.
	DEHP.
	Diethylhexyl phthalate.
117840	Di-n-octyl phthalate.
	1,2-Benzenedicarboxylic acid, dioctyl ester.
118741	Benzene, hexachloro-.
	Hexachlorobenzene.
119380	Carbamic acid, dimethyl-, 3-methyl-1-(1-methylethyl)-1H-pyrazol-5-yl ester.
	Isolan.
119904	[1,1′-Biphenyl]-4,4′-diamine,3,3′-dimethoxy-.
	3,3′-Dimethoxybenzidine.
119937	[1,1′-Biphenyl]-4,4′-diamine,3,3′- dimethyl-.
	3,3′-Dimethylbenzidine.
120127	Anthracene.
120581	Isosafrole.
	1,3-Benzodioxole, 5-(1-propenyl)-.
120809	Catechol.
120821	1,2,4-Trichlorobenzene.
120832	Phenol, 2,4-dichloro-.
	2,4-Dichlorophenol.
121142	Benzene, 1-methyl-2,4-dinitro-.
	2,4-Dinitrotoluene.
121211	Pyrethrins.
121299	Pyrethrins.
121448	Ethanamine, N,N-diethyl-.
	Triethylamine.
121697	N,N-Dimethylaniline.
121755	Malathion.
122098	alpha,alpha-Dimethylphenethylamine.
	Benzeneethanamine, alpha,alpha-dimethyl-.
122429	Carbamic acid, phenyl-, 1-methylethyl ester.
	Propham.
122667	Hydrazine, 1,2-diphenyl-.
	1,2-Diphenylhydrazine.
123319	Hydroquinone.
123331	Maleic hydrazide.
	3,6-Pyridazinedione, 1,2-dihydro-.
123386	Propionaldehyde.
123626	Propionic anhydride.
123637	Paraldehyde.
	1,3,5-Trioxane, 2,4,6-trimethyl-.
123739	Crotonaldehyde.
	2-Butenal.
123864	Butyl acetate.
123911	1,4-Diethyleneoxide.
	1,4-Dioxane.
123922	iso-Amyl acetate.
124049	Adipic acid.
124403	Dimethylamine.
	Methanamine, N-methyl-.
124414	Sodium methylate.
124481	Chlorodibromomethane.
126727	Tris(2,3-dibromopropyl) phosphate.
	1-Propanol, 2,3-dibromo-, phosphate (3:1).
126987	Methacrylonitrile.
	2-Propenenitrile, 2-methyl-.
126998	Chloroprene.
127184	Ethene, tertrachloro-.
	Perchloroethylene.

APPENDIX A TO § 302.4—SEQUENTIAL CAS REGISTRY NUMBER LIST OF CERCLA HAZARDOUS SUBSTANCES—Continued

CASRN	Hazardous substance
	Tetrachloroethylene.
127822	Zinc phenolsulfonate.
129000	Pyrene.
130154	1,4-Naphthalenedione.
	1,4-Naphthoquinone.
131113	Dimethyl phthalate.
	1,2-Benzenedicarboxylic acid, dimethyl ester.
131748	Ammonium picrate.
	Phenol, 2,4,6-trinitro-, ammonium salt.
131895	Phenol, 2-cyclohexyl-4,6-dinitro-.
	2-Cyclohexyl-4,6-dinitrophenol.
132649	Dibenzofuran.
133062	Captan.
133904	Chloramben.
134327	alpha-Naphthylamine.
	1-Naphthalenamine.
137268	Thioperoxydicarbonic diamide ([H2N)C(S)]2S2, tetramethyl-.
	Thiram.
137304	Zinc, bis(dimethylcarbamodithioato-S,S')-.
	Ziram.
140885	Ethyl acrylate.
	2-Propenoic acid, ethyl ester.
141786	Acetic acid, ethyl ester.
	Ethyl acetate.
142289	1,3-Dichloropropane.
142712	Cupric acetate.
142847	Dipropylamine.
	1-Propanamine, N-propyl-.
143339	Sodium cyanide Na(CN).
143500	Kepone.
	1,3,4-Metheno-2H-cyclobuta[cd]pentalen-2-one,1,1a,3,3a,4,5,5,5a,5b,6-decachlorooctahydro-.
145733	Endothall.
	7-Oxabicyclo[2.2.1]heptane-2,3-dicarboxylic acid.
148823	L-Phenylalanine, 4-[bis(2-chloroethyl)amino]-.
	Melphalan.
151508	Potassium cyanide K(CN).
151564	Aziridine.
	Ethylenimine.
152169	Diphosphoramide, octamethyl-.
	Octamethylpyrophosphoramide.
156605	Ethene, 1,2-dichloro- (E).
	1,2-Dichloroethylene.
156627	Calcium cyanamide.
189559	Benzo[rst]pentaphene.
	Dibenzo[a,i]pyrene.
191242	Benzo[ghi]perylene.
193395	Indeno(1,2,3-cd)pyrene.
205992	Benzo[b]fluoranthene.
206440	Fluoranthene.
207089	Benzo(k)fluoranthene.
208968	Acenaphthylene.
218019	Chrysene.
225514	Benz[c]acridine.
297972	O,O-Diethyl O-pyrazinyl phosphorothioate.
	Phosphorothioic acid, O,O-diethyl O-pyrazinyl ester.
298000	Methyl parathion.
	Phosphorothioic acid, O,O-dimethyl O-(4-nitrophenyl) ester.
298022	Phorate.
	Phosphorodithioic acid, O,O-diethyl S-[(ethylthio) methyl] ester.
298044	Disulfoton.
	Phosphorodithioic acid, O,O-diethyl S-[2-(ethylthio)ethyl] ester.

APPENDIX A TO § 302.4—SEQUENTIAL CAS REGISTRY NUMBER LIST OF CERCLA HAZARDOUS SUBSTANCES—Continued

CASRN	Hazardous substance
300765	Naled.
301042	Acetic acid, lead(2+) salt.
	Lead acetate.
302012	Hydrazine.
303344	Lasiocarpine.
	2-Butenoic acid, 2-methyl-, 7-[[2,3-dihydroxy-2-(1-methoxyethyl)-3-methyl-1-oxobutoxy]methyl]-2,3,5,7a-tetrahydro-1H-pyrrolizin-1-yl ester, [1S-[1alpha(Z),7(2S*,3R*), 7aalpha]]-.
305033	Benzenebutanoic acid, 4-[bis(2-chloroethyl)amino]-.
	Chlorambucil.
309002	Aldrin.
	1,4:5,8-Dimethanonaphthalene, 1,2,3,4,10,10-hexachloro-1,4,4a,5,8,8a-hexahydro-, (1alpha,4alpha,4abeta,5alpha,8alpha, 8abeta)-.
311455	Diethyl-p-nitrophenyl phosphate.
	Phosphoric acid, diethyl 4-nitrophenyl ester.
315184	Mexacarbate.
	Phenol, 4-(dimethylamino)-3,5-dimethyl-, methylcarbamate (ester).
319846	alpha—BHC.
319857	beta—BHC.
319868	delta—BHC.
329715	2,5-Dinitrophenol.
330541	Diuron.
333415	Diazinon.
334883	Diazomethane.
353504	Carbon oxyfluoride.
	Carbonic difluoride.
357573	Brucine.
	Strychnidin-10-one, 2,3-dimethoxy-.
460195	Cyanogen.
	Ethanedinitrile.
463581	Carbonyl sulfide.
465736	Isodrin.
	1,4:5,8-Dimethanonaphthalene,1,2,3,4,10,10-hexachloro-1,4,4a,5,8,8a-hexahydro-, (1alpha,4alpha,4abeta,5beta,8beta, 8abeta)-.
492808	Auramine.
	Benzenamine, 4,4′-carbonimidoylbis[N,N-dimethyl-.
494031	Chlornaphazine.
	Naphthalenamine, N,N′-bis(2-chloroethyl)-.
496720	Benzenediamine, ar-methyl-.
	Toluenediamine.
	2,4-Toluene diamine.
504245	4-Aminopyridine.
	4-Pyridinamine.
504609	1-Methylbutadiene.
	1,3-Pentadiene.
506616	Argentate(1-), bis(cyano-C)-, potassium.
	Potassium silver cyanide.
506649	Silver cyanide Ag(CN).
506683	Cyanogen bromide (CN)Br.
506774	Cyanogen chloride (CN)Cl.
506876	Ammonium carbonate.
506967	Acetyl bromide.
509148	Methane, tetranitro-.
	Tetranitromethane.
510156	Benzeneacetic acid, 4-chloro-α- (4-chlorophenyl)-α-hydroxy-, ethyl ester.
	Chlorobenzilate.
513495	sec-Butylamine.
528290	o-Dinitrobenzene.
532274	2-Chloroacetophenone.
534521	4,6-Dinitro-o-cresol, and salts.

APPENDIX A TO § 302.4—SEQUENTIAL CAS REGISTRY NUMBER LIST OF CERCLA HAZARDOUS SUBSTANCES—Continued

CASRN	Hazardous substance
	Phenol, 2-methyl-4,6-dinitro-, & salts.
540738	Hydrazine, 1,2-dimethyl-.
	1,2-Dimethylhydrazine.
540841	2,2,4-Trimethylpentane.
540885	tert-Butyl acetate.
541093	Uranyl acetate.
541537	Dithiobiuret.
	Thioimidodicarbonic diamide [(H2N)C(S)]2NH.
541731	Benzene, 1,3-dichloro-.
	m-Dichlorobenzene.
	1,3-Dichlorobenzene.
542621	Barium cyanide.
542756	1-Propene, 1,3-dichloro-.
	1,3-Dichloropropene.
542767	Propanenitrile, 3-chloro-.
	3-Chloropropionitrile.
542881	Bis(chloromethyl)ether.
	Dichloromethyl ether.
	Methane, oxybis(chloro-.
543908	Cadmium acetate.
544183	Cobaltous formate.
544923	Copper cyanide Cu(CN).
554847	m-Nitrophenol.
557197	Nickel cyanide $Ni(CN)_2$.
557211	Zinc cyanide $Zn(CN)_2$.
	Zinc cyanide Zn(CN)2.
557346	Zinc acetate.
557415	Zinc formate.
563122	Ethion.
563688	Acetic acid, thallium(1+) salt.
	Thallium(I) acetate.
573568	2,6-Dinitrophenol.
584849	Benzene, 1,3-diisocyanatomethyl-.
	Toluene diisocyanate.
	2,4-Toluene diisocyanate.
591082	Acetamide, N-(aminothioxomethyl)-.
	1-Acetyl-2-thiourea.
592018	Calcium cyanide $Ca(CN)_2$.
592041	Mercuric cyanide.
592858	Mercuric thiocyanate.
592870	Lead thiocyanate.
593602	Vinyl bromide.
594423	Methanesulfenyl chloride, trichloro-.
	Trichloromethanesulfenyl chloride.
598312	Bromoacetone.
	2-Propanone, 1-bromo-.
606202	Benzene, 2-methyl-1,3-dinitro-.
	2,6-Dinitrotoluene.
608731	HEXACHLOROCYCLOHEXANE (all isomers).
608935	Benzene, pentachloro-.
	Pentachlorobenzene.
609198	3,4,5-Trichlorophenol.
610399	3,4-Dinitrotoluene.
615532	Carbamic acid, methylnitroso-, ethyl ester.
	N-Nitroso-N-methylurethane.
621647	Di-n-propylnitrosamine.
	1-Propanamine, N-nitroso-N-propyl-.
624839	Methane, isocyanato-.
	Methyl isocyanate.
625161	tert-Amyl acetate.
626380	sec-Amyl acetate.
628637	Amyl acetate.
628864	Fulminic acid, mercury(2+)salt.
	Mercury fulminate.
630104	Selenourea.
630206	Ethane, 1,1,1,2-tetrachloro-.
	1,1,1,2-Tetrachloroethane.
631618	Ammonium acetate.
636215	Benzenamine, 2-methyl-, hydrochloride.

APPENDIX A TO § 302.4—SEQUENTIAL CAS REGISTRY NUMBER LIST OF CERCLA HAZARDOUS SUBSTANCES—Continued

CASRN	Hazardous substance
	o-Toluidine hydrochloride.
640197	Acetamide, 2-fluoro-.
	Fluoroacetamide.
644644	Carbamic acid, dimethyl-,1-[(dimethylamino)carbonyl]-5-methyl-1H-pyrazol-3-yl ester.
	Dimetilan.
680319	Hexamethylphosphoramide.
684935	N-Nitroso-N-methylurea.
	Urea, N-methyl-N-nitroso-.
692422	Arsine, diethyl-.
	Diethylarsine.
696286	Arsonous dichloride, phenyl-.
	Dichlorophenylarsine.
757584	Hexaethyl tetraphosphate.
	Tetraphosphoric acid, hexaethyl ester.
759739	N-Nitroso-N-ethylurea.
	Urea, N-ethyl-N-nitroso-.
764410	1,4-Dichloro-2-butene.
	2-Butene, 1,4-dichloro-.
765344	Glycidylaldehyde.
	Oxiranecarboxyaldehyde.
815827	Cupric tartrate.
822060	Hexamethylene-1,6-diisocyanate.
823405	Benzenediamine, ar-methyl-.
	Toluenediamine.
	2,4-Toluene diamine.
924163	N-Nitrosodi-n-butylamine.
	1-Butanamine, N-butyl-N-nitroso-.
930552	N-Nitrosopyrrolidine.
	Pyrrolidine, 1-nitroso-.
933755	2,3,6-Trichlorophenol.
933788	2,3,5-Trichlorophenol.
959988	alpha-Endosulfan.
1024573	Heptachlor epoxide.
1031078	Endosulfan sulfate.
1066304	Chromic acetate.
1066337	Ammonium bicarbonate.
1072351	Lead stearate.
1111780	Ammonium carbamate.
1116547	Ethanol, 2,2′-(nitrosoimino)bis-.
	N-Nitrosodiethanolamine.
1120714	1,2-Oxathiolane, 2,2-dioxide.
	1,3-Propane sultone.
1129415	Carbamic acid, methyl-, 3-methylphenyl ester.
	Metolcarb.
1185575	Ferric ammonium citrate.
1194656	Dichlobenil.
1300716	Xylenol.
1303282	Arsenic oxide As2O5.
	Arsenic pentoxide.
1303328	Arsenic disulfide.
1303339	Arsenic trisulfide.
1309644	Antimony trioxide.
1310583	Potassium hydroxide.
1310732	Sodium hydroxide.
1314325	Thallic oxide.
	Thallium oxide Tl2O3.
1314621	Vanadium oxide V2O5.
	Vanadium pentoxide.
1314803	Phosphorus pentasulfide.
	Phosphorus sulfide.
	Sulfur phosphide.
1314847	Zinc phosphide Zn_3P_2.
1314870	Lead sulfide.
1319728	2,4,5-T amines.
1319773	Cresol (cresylic acid).
	Cresols (isomers and mixture).
	Cresylic acid (isomers and mixture).
	Phenol, methyl-.

APPENDIX A TO § 302.4—SEQUENTIAL CAS REGISTRY NUMBER LIST OF CERCLA HAZARDOUS SUBSTANCES—Continued

CASRN	Hazardous substance
1320189	2,4-D Ester.
1321126	Nitrotoluene.
1327533	Arsenic oxide As2O3.
	Arsenic trioxide.
1330207	Benzene, dimethyl-.
	Xylene.
	Xylene (mixed).
	Xylenes (isomers and mixture).
1332076	Zinc borate.
1332214	Asbestos.
1333831	Sodium bifluoride.
1335326	Lead subacetate.
	Lead, bis(acetato-O)tetrahydroxytri.
1336216	Ammonium hydroxide.
1336363	Aroclors.
	PCBs.
	POLYCHLORINATED BIPHENYLS.
1338234	Methyl ethyl ketone peroxide.
	2-Butanone peroxide.
1338245	Naphthenic acid.
1341497	Ammonium bifluoride.
1464535	1,2:3,4-Diepoxybutane.
	2,2′-Bioxirane.
1563388	7-Benzofuranol, 2,3-dihydro-2,2-dimethyl-.
	Carbofuran phenol.
1563662	7-Benzofuranol, 2,3-dihydro-2,2-dimethyl-, methylcarbamate.
	Carbofuran.
1582098	Trifluralin.
1615801	Hydrazine, 1,2-diethyl-.
	N,N′-Diethylhydrazine.
1634044	Methyl tert-butyl ether.
1646884	Aldicarb sulfone.
	Propanal, 2-methyl-2-(methyl-sulfonyl)-, O-[(methylamino)carbonyl] oxime.
1746016	TCDD.
	2,3,7,8-Tetrachlorodibenzo-p-dioxin.
1762954	Ammonium thiocyanate.
1863634	Ammonium benzoate.
1888717	Hexachloropropene.
	1-Propene, 1,1,2,3,3,3-hexachloro-.
1918009	Dicamba.
1928387	2,4-D Ester.
1928478	2,4,5-T esters.
1928616	2,4-D Ester.
1929733	2,4-D Ester.
2008460	2,4,5-T amines.
2032657	Mercaptodimethur.
	Methiocarb.
	Phenol, (3,5-dimethyl-4-(methylthio)-, methylcarbamate.
2303164	Carbamothioic acid, bis(1-methylethyl)-, S-(2,3-dichloro-2-propenyl) ester.
	Diallate.
2303175	Carbamothioic acid, bis(1-methylethyl)-, S-(2,3,3-trichloro-2-propenyl) ester.
	Triallate.
2312358	Propargite.
2545597	2,4,5-T esters.
2631370	Phenol, 3-methyl-5-(1-methylethyl)-, methyl carbamate.
	Promecarb.
2763964	3(2H)-Isoxazolone, 5-(aminomethyl)-.
	5-(Aminomethyl)-3-isoxazolol.
2764729	Diquat
2921882	Chlorpyrifos.
2944674	Ferric ammonium oxalate.
2971382	2,4-D Ester.
3012655	Ammonium citrate, dibasic.
3164292	Ammonium tartrate.

APPENDIX A TO § 302.4—SEQUENTIAL CAS REGISTRY NUMBER LIST OF CERCLA HAZARDOUS SUBSTANCES—Continued

CASRN	Hazardous substance
3165933	Benzenamine, 4-chloro-2-methyl-, hydrochloride.
	4-Chloro-o-toluidine, hydrochloride.
3251238	Cupric nitrate.
3288582	O,O-Diethyl S-methyl dithiophosphate.
	Phosphorodithioic acid, O,O-diethyl S-methyl ester.
3486359	Zinc carbonate.
3547044	DDE.
3689245	Tetraethyldithiopyrophosphate.
	Thiodiphosphoric acid, tetraethyl ester.
3813147	2,4,5-T amines.
4170303	Crotonaldehyde.
	2-Butenal.
4549400	N-Nitrosomethylvinylamine.
	Vinylamine, N-methyl-N-nitroso-.
5344821	Thiourea, (2-chlorophenyl)-.
	1-(o-Chlorophenyl)thiourea.
5893663	Cupric oxalate.
5952261	Ethanol, 2,2'-oxybis-, dicarbamate.
	Diethylene glycol, dicarbamate.
5972736	Ammonium oxalate.
6009707	Ammonium oxalate.
6369966	2,4,5-T amines.
6369977	2,4,5-T amines.
6533739	Carbonic acid, dithallium(1+) salt.
	Thallium(I) carbonate.
7005723	4-Chlorophenyl phenyl ether.
7421934	Endrin aldehyde.
7428480	Lead stearate.
7439921	Lead.
7439976	Mercury.
7440020	Nickel.
7440224	Silver.
7440235	Sodium.
7440280	Thallium.
7440360	Antimony.
7440382	Arsenic.
7440417	Beryllium.
	Beryllium powder.
7440439	Cadmium.
7440473	Chromium.
7440508	Copper.
7440666	Zinc.
7446084	Selenium dioxide.
	Selenium oxide.
7446142	Lead sulfate.
7446186	Sulfuric acid, dithallium(1+) salt.
	Thallium(I) sulfate.
7446277	Lead phosphate.
	Phosphoric acid, lead(2+) salt (2:3).
7447394	Cupric chloride.
7488564	Selenium sulfide SeS_2.
7550450	Titanium tetrachloride.
7558794	Sodium phosphate, dibasic.
7601549	Sodium phosphate, tribasic.
7631892	Sodium arsenate.
7631905	Sodium bisulfite.
7632000	Sodium nitrite.
7645252	Lead arsenate.
7646857	Zinc chloride.
7647010	Hydrochloric acid.
	Hydrogen chloride.
7647189	Antimony pentachloride.
7664382	Phosphoric acid.
7664393	Hydrofluoric acid.
	Hydrogen fluoride.
7664417	Ammonia.
7664939	Sulfuric acid.
7681494	Sodium fluoride.

APPENDIX A TO § 302.4—SEQUENTIAL CAS REGISTRY NUMBER LIST OF CERCLA HAZARDOUS SUBSTANCES—Continued

CASRN	Hazardous substance
7681529	Sodium hypochlorite.
7697372	Nitric acid.
7699458	Zinc bromide.
7705080	Ferric chloride.
7718549	Nickel chloride.
7719122	Phosphorus trichloride.
7720787	Ferrous sulfate.
7722647	Potassium permanganate.
7723140	Phosphorus.
7733020	Zinc sulfate.
7738945	Chromic acid.
7758943	Ferrous chloride.
7758954	Lead chloride.
7758987	Cupric sulfate.
7761888	Silver nitrate.
7773060	Ammonium sulfamate.
7775113	Sodium chromate.
7778394	Arsenic acid H_3AsO_4.
7778441	Calcium arsenate.
7778509	Potassium bichromate.
7778543	Calcium hypochlorite.
7779864	Zinc hydrosulfite.
7779886	Zinc nitrate.
7782414	Fluorine.
7782492	Selenium.
7782505	Chlorine.
7782630	Ferrous sulfate.
7782823	Sodium selenite.
7782867	Mercurous nitrate.
7783008	Selenious acid.
7783064	Hydrogen sulfide H_2S.
7783359	Mercuric sulfate.
7783462	Lead fluoride.
7783495	Zinc fluoride.
7783508	Ferric fluoride.
7783564	Antimony trifluoride.
7784341	Arsenic trichloride.
7784409	Lead arsenate.
7784410	Potassium arsenate.
7784465	Sodium arsenite.
7786347	Mevinphos.
7786814	Nickel sulfate.
7787475	Beryllium chloride.
7787497	Beryllium fluoride.
7787555	Beryllium nitrate.
7788989	Ammonium chromate.
7789006	Potassium chromate.
7789062	Strontium chromate.
7789095	Ammonium bichromate.
7789426	Cadmium bromide.
7789437	Cobaltous bromide.
7789619	Antimony tribromide.
7790945	Chlorosulfonic acid.
7791120	Thallium chloride TlCl.
7803512	Hydrogen phosphide.
	Phosphine.
7803556	Ammonium vanadate.
	Vanadic acid, ammonium salt.
8001352	Chlorinated camphene.
	Toxaphene.
8003198	Dichloropropane—Dichloropropene (mixture).
8003347	Pyrethrins.
8014957	Sulfuric acid.
10022705	Sodium hypochlorite.
10025873	Phosphorus oxychloride.
10025919	Antimony trichloride.
10026116	Zirconium tetrachloride.
10028225	Ferric sulfate.
10031591	Sulfuric acid, dithallium(1+) salt.
	Thallium(I) sulfate.

APPENDIX A TO § 302.4—SEQUENTIAL CAS REGISTRY NUMBER LIST OF CERCLA HAZARDOUS SUBSTANCES—Continued

CASRN	Hazardous substance
10039324	Sodium phosphate, dibasic.
10043013	Aluminum sulfate.
10045893	Ferrous ammonium sulfate.
10045940	Mercuric nitrate.
10049055	Chromous chloride.
10099748	Lead nitrate.
10101538	Chromic sulfate.
10101630	Lead iodide.
10101890	Sodium phosphate, tribasic.
10102064	Uranyl nitrate.
10102188	Sodium selenite.
10102439	Nitric oxide.
	Nitrogen oxide NO.
10102440	Nitrogen dioxide.
	Nitrogen oxide NO2.
10102451	Nitric acid, thallium(1+) salt.
	Thallium(I) nitrate.
10102484	Lead arsenate.
10108642	Cadmium chloride.
10124502	Potassium arsenite.
10140655	Sodium phosphate, dibasic.
10192300	Ammonium bisulfite.
10196040	Ammonium sulfite.
10361894	Sodium phosphate, tribasic.
10380297	Cupric sulfate, ammoniated.
10415755	Mercurous nitrate.
10421484	Ferric nitrate.
10544726	Nitrogen dioxide.
	Nitrogen oxide NO2.
10588019	Sodium bichromate.
10605217	Carbamic acid, 1H-benzimidazol-2-yl, methyl ester.
	Carbendazim.
11096825	Aroclor 1260.
11097691	Aroclor 1254.
11104282	Aroclor 1221.
11115745	Chromic acid.
11141165	Aroclor 1232.
12002038	Cupric acetoarsenite.
12039520	Selenious acid, dithallium(1+) salt.
	Thallium (I) selenite.
12054487	Nickel hydroxide.
12125018	Ammonium fluoride.
12125029	Ammonium chloride.
12135761	Ammonium sulfide.
12672296	Aroclor 1248.
12674112	Aroclor 1016.
12771083	Sulfur monochloride.
13463393	Nickel carbonyl $Ni(CO)_4$, (T–4)-.
13560991	2,4,5-T salts.
13597994	Beryllium nitrate.
13746899	Zirconium nitrate.
13765190	Calcium chromate.
	Chromic acid H2CrO4, calcium salt.
13814965	Lead fluoborate.
13826830	Ammonium fluoborate.
13952846	sec-Butylamine.
14017415	Cobaltous sulfamate.
14216752	Nickel nitrate.
14258492	Ammonium oxalate.
14307358	Lithium chromate.
14307438	Ammonium tartrate.
14639975	Zinc ammonium chloride.
14639986	Zinc ammonium chloride.
14644612	Zirconium sulfate.
15339363	Manganese, bis(dimethylcarbamodithioato-S,S')-.
	Manganese dimethyldithiocarbamate.
15699180	Nickel ammonium sulfate.
15739807	Lead sulfate.

APPENDIX A TO § 302.4—SEQUENTIAL CAS REGISTRY NUMBER LIST OF CERCLA HAZARDOUS SUBSTANCES—Continued

CASRN	Hazardous substance
15950660	2,3,4-Trichlorophenol.
16721805	Sodium hydrosulfide.
16752775	Ethanimidothioic acid, N-[[(methylamino)carbonyl] oxy]-, methyl ester.
	Methomyl.
16871719	Zinc silicofluoride.
16919190	Ammonium silicofluoride.
16923958	Zirconium potassium fluoride.
17702577	Formparanate.
	Methanimidamide, N,N-dimethyl-N'-[2-methyl-4-[[(methylamino)carbonyl]oxy]phenyl]-.
17804352	Benomyl.
	Carbamic acid, [1-[(butylamino)carbonyl]-1H-benzimidazol-2-yl]-, methyl ester.
18883664	D-Glucose, 2-deoxy-2[[(methylnitrosoamino)-carbonyl]amino]-.
	Glucopyranose, 2-deoxy-2-(3-methyl-3-nitrosoureido)-, D-.
	Streptozotocin.
20816120	Osmium oxide OsO_4, (T–4)-.
	Osmium tetroxide.
20830813	Daunomycin.
	5,12-Naphthacenedione, 8-acetyl-10-[(3-amino-2,3,6-trideoxy-alpha-L-lyxo-hexopyranosyl)oxy]-7,8,9,10-tetrahydro-6,8,11-trihydroxy-1-methoxy-, (8S-cis)-.
20859738	Aluminum phosphide.
22781233	Bendiocarb.
	1,3-Benzodioxol-4-ol, 2,2-dimethyl-, methyl carbamate.
22961826	Bendiocarb phenol.
	1,3-Benzodioxol-4-ol, 2,2-dimethyl-.
23135220	Ethanimidothioic acid, 2-(dimethylamino)-N-[[(methylamino)carbonyl]oxy]-2-oxo-, methyl ester.
	Oxamyl.
23422539	Methanimidamide, N,N-dimethyl-N'-[3-[[(methylamino)-carbonyl]oxy]phenyl]-, monohydrochloride.
	Formetanate hydrochloride.
23564058	Carbamic acid, [1,2-phenylenebis(iminocarbonothioyl)]bis-, dimethyl ester.
	Thiophanate-methyl.
23950585	Benzamide, 3,5-dichloro-N-(1,1- dimethyl-2-propynyl)-.
	Pronamide.
25154545	Dinitrobenzene (mixed).
25154556	Nitrophenol (mixed).
25155300	Sodium dodecylbenzenesulfonate.
25167822	Trichlorophenol.
25168154	2,4,5-T esters.
25168267	2,4-D Ester.
25321146	Dinitrotoluene.
25321226	Dichlorobenzene.
25376458	Benzenediamine, ar-methyl-.
	Toluenediamine.
	2,4-Toluene diamine.
25550587	Dinitrophenol.
26264062	Calcium dodecylbenzenesulfonate.
26419738	1,3-Dithiolane-2-carboxaldehyde, 2,4-dimethyl-, O-[(methylamino)-carbonyl]oxime.
	Tirpate.
26471625	Benzene, 1,3-diisocyanatomethyl-.
	Toluene diisocyanate.
	2,4-Toluene diisocyanate.
26628228	Sodium azide.
26638197	Dichloropropane.
26952238	Dichloropropene.
27176870	Dodecylbenzenesulfonic acid.

APPENDIX A TO § 302.4—SEQUENTIAL CAS REGISTRY NUMBER LIST OF CERCLA HAZARDOUS SUBSTANCES—Continued

CASRN	Hazardous substance
27323417	Triethanolamine dodecylbenzene sulfonate.
27774136	Vanadyl sulfate.
28300745	Antimony potassium tartrate.
30525894	Paraformaldehyde.
30558431	Ethanimidothioic acid, 2-(dimethylamino)-N-hydroxy-2-oxo-, methyl ester.
	A2213.
32534955	2,4,5-TP esters.
33213659	beta - Endosulfan.
36478769	Uranyl nitrate.
37211055	Nickel chloride.
39196184	Thiofanox.
	2-Butanone, 3,3-dimethyl-1-(methylthio)-,O-[(methylamino)carbonyl] oxime.
42504461	Isopropanolamine dodecylbenzenesulfonate.
52628258	Zinc ammonium chloride.
52652592	Lead stearate.
52740166	Calcium arsenite.
52888809	Carbamothioic acid, dipropyl-, S-(phenylmethyl) ester.
	Prosulfocarb.
53467111	2,4-D Ester.
53469219	Aroclor 1242.
55285148	Carbamic acid, [(dibutylamino)-thio]methyl-, 2,3-dihydro-2,2-dimethyl-7-benzofuranyl ester.
	Carbosulfan.
55488874	Ferric ammonium oxalate.
56189094	Lead stearate.
59669260	Ethanimidothioic acid, N,N'-[thiobis[(methylimino)carbonyloxy]]bis-, dimethyl ester.
	Thiodicarb.
61792072	2,4,5-T esters.

APPENDIX B TO § 302.4—RADIONUCLIDES

Radionuclide	Atomic Number	Final RQ Ci (Bq)
Radionuclides@	.....	1&(3.7E 10)
Actinium-224	89	100 (3.7E 12)
Actinium-225	89	1 (3.7E 10)
Actinium-226	89	10 (3.7E 11)
Actinium-227	89	0.001 (3.7E 7)
Actinium-228	89	10 (3.7E 11)
Aluminum-26	13	10 (3.7E 11)
Americium-237	95	1000 (3.7E 13)
Americium-238	95	100 (3.7E 12)
Americium-239	95	100 (3.7E 12)
Americium-240	95	10 (3.7E 11)
Americium-241	95	0.01 (3.7E 8)
Americium-242m	95	0.01 (3.7E 8)
Americium-242	95	100 (3.7E 12)
Americium-243	95	0.01 (3.7E 8)
Americium-244m	95	1000 (3.7E 13)
Americium-244	95	10 (3.7E 11)
Americium-245	95	1000 (3.7E 13)
Americium-246m	95	1000 (3.7E 13)
Americium-246	95	1000 (3.7E 13)
Antimony-115	51	1000 (3.7E 13)
Antimony-116m	51	100 (3.7E 12)
Antimony-116	51	1000 (3.7E 13)
Antimony-117	51	1000 (3.7E 13)
Antimony-118m	51	10 (3.7E 11)
Antimony-119	51	1000 (3.7E 13)
Antimony-120 (16 min)	51	1000 (3.7E 13)
Antimony-120 (5.76 day)	51	10 (3.7E 11)
Antimony-122	51	10 (3.7E 11)
Antimony-124m	51	1000 (3.7E 13)

APPENDIX B TO § 302.4—RADIONUCLIDES—Continued

Radionuclide	Atomic Number	Final RQ Ci (Bq)
Antimony-124	51	10 (3.7E 11)
Antimony-125	51	10 (3.7E 11)
Antimony-126m	51	1000 (3.7E 13)
Antimony-126	51	10 (3.7E 11)
Antimony-127	51	10 (3.7E 11)
Antimony-128 (10.4 min)	51	1000 (3.7E 13)
Antimony-128 (9.01 hr)	51	10 (3.7E 11)
Antimony-129	51	100 (3.7E 12)
Antimony-130	51	100 (3.7E 12)
Antimony-131	51	1000 (3.7E 13)
Argon-39	18	1000 (3.7E 13)
Argon-41	18	10 (3.7E 11)
Arsenic-69	33	1000 (3.7E 13)
Arsenic-70	33	100 (3.7E 12)
Arsenic-71	33	100 (3.7E 12)
Arsenic-72	33	10 (3.7E 11)
Arsenic-73	33	100 (3.7E 12)
Arsenic-74	33	10 (3.7E 11)
Arsenic-76	33	100 (3.7E 12)
Arsenic-77	33	1000 (3.7E 13)
Arsenic-78	33	100 (3.7E 12)
Astatine-207	85	100 (3.7E 12)
Astatine-211	85	100 (3.7E 12)
Barium-126	56	1000 (3.7E 13)
Barium-128	56	10 (3.7E 11)
Barium-131m	56	1000 (3.7E 13)
Barium-131	56	10 (3.7E 11)
Barium-133m	56	100 (3.7E 12)
Barium-133	56	10 (3.7E 11)
Barium-135m	56	1000 (3.7E 13)
Barium-139	56	1000 (3.7E 13)
Barium-140	56	10 (3.7E 11)
Barium-141	56	1000 (3.7E 13)
Barium-142	56	1000 (3.7E 13)
Berkelium-245	97	100 (3.7E 12)
Berkelium-246	97	10 (3.7E 11)
Berkelium-247	97	0.01 (3.7E 8)
Berkelium-249	97	1 (3.7E 10)
Berkelium-250	97	100 (3.7E 12)
Beryllium-7	4	100 (3.7E 12)
Beryllium-10	4	1 (3.7E 10)
Bismuth-200	83	100 (3.7E 12)
Bismuth-201	83	100 (3.7E 12)
Bismuth-202	83	1000 (3.7E 13)
Bismuth-203	83	10 (3.7E 11)
Bismuth-205	83	10 (3.7E 11)
Bismuth-206	83	10 (3.7E 11)
Bismuth-207	83	10 (3.7E 11)
Bismuth-210m	83	0.1 (3.7E 9)
Bismuth-210	83	10 (3.7E 11)
Bismuth-212	83	100 (3.7E 12)
Bismuth-213	83	100 (3.7E 12)
Bismuth-214	83	100 (3.7E 12)
Bromine-74m	35	100 (3.7E 12)
Bromine-74	35	100 (3.7E 12)
Bromine-75	35	100 (3.7E 12)
Bromine-76	35	10 (3.7E 11)
Bromine-77	35	100 (3.7E 12)
Bromine-80m	35	1000 (3.7E 13)
Bromine-80	35	1000 (3.7E 13)
Bromine-82	35	10 (3.7E 11)
Bromine-83	35	1000 (3.7E 13)
Bromine-84	35	100 (3.7E 12)
Cadmium-104	48	1000 (3.7E 13)
Cadmium-107	48	1000 (3.7E 13)
Cadmium-109	48	1 (3.7E 10)
Cadmium-113m	48	0.1 (3.7E 9)
Cadmium-113	48	0.1 (3.7E 9)
Cadmium-115m	48	10 (3.7E 11)
Cadmium-115	48	100 (3.7E 12)

APPENDIX B TO § 302.4—RADIONUCLIDES—Continued

Radionuclide	Atomic Number	Final RQ Ci (Bq)
Cadmium-117m	48	10 (3.7E 11)
Cadmium-117	48	100 (3.7E 12)
Calcium-41	20	10 (3.7E 11)
Calcium-45	20	10 (3.7E 11)
Calcium-47	20	10 (3.7E 11)
Californium-244	98	1000 (3.7E 13)
Californium-246	98	10 (3.7E 11)
Californium-248	98	0.1 (3.7E 9)
Californium-249	98	0.01 (3.7E 8)
Californium-250	98	0.01 (3.7E 8)
Californium-251	98	0.01 (3.7E 8)
Californium-252	98	0.1 (3.7E 9)
Californium-253	98	10 (3.7E 11)
Californium-254	98	0.1 (3.7E 9)
Carbon-11	6	1000 (3.7E 13)
Carbon-14	6	10 (3.7E 11)
Cerium-134	58	10 (3.7E 11)
Cerium-135	58	10 (3.7E 11)
Cerium-137m	58	100 (3.7E 12)
Cerium-137	58	1000 (3.7E 13)
Cerium-139	58	100 (3.7E 12)
Cerium-141	58	10 (3.7E 11)
Cerium-143	58	100 (3.7E 12)
Cerium-144	58	1 (3.7E 10)
Cesium-125	55	1000 (3.7E 13)
Cesium-127	55	100 (3.7E 12)
Cesium-129	55	100 (3.7E 12)
Cesium-130	55	1000 (3.7E 13)
Cesium-131	55	1000 (3.7E 13)
Cesium-132	55	10 (3.7E 11)
Cesium-134m	55	1000 (3.7E 13)
Cesium-134	55	1 (3.7E 10)
Cesium-135m	55	100 (3.7E 12)
Cesium-135	55	10 (3.7E 11)
Cesium-136	55	10 (3.7E 11)
Cesium-137	55	1 (3.7E 10)
Cesium-138	55	100 (3.7E 12)
Chlorine-36	17	10 (3.7E 11)
Chlorine-38	17	100 (3.7E 12)
Chlorine-39	17	100 (3.7E 12)
Chromium-48	24	100 (3.7E 12)
Chromium-49	24	1000 (3.7E 13)
Chromium-51	24	1000 (3.7E 13)
Cobalt-55	27	10 (3.7E 11)
Cobalt-56	27	10 (3.7E 11)
Cobalt-57	27	100 (3.7E 12)
Cobalt-58m	27	1000 (3.7E 13)
Cobalt-58	27	10 (3.7E 11)
Cobalt-60m	27	1000 (3.7E 13)
Cobalt-60	27	10 (3.7E 11)
Cobalt-61	27	1000 (3.7E 13)
Cobalt-62m	27	1000 (3.7E 13)
Copper-60	29	100 (3.7E 12)
Copper-61	29	100 (3.7E 12)
Copper-64	29	1000 (3.7E 13)
Copper-67	29	100 (3.7E 12)
Curium-238	96	1000 (3.7E 13)
Curium-240	96	1 (3.7E 10)
Curium-241	96	10 (3.7E 11)
Curium-242	96	1 (3.7E 10)
Curium-243	96	0.01 (3.7E 8)
Curium-244	96	0.01 (3.7E 8)
Curium-245	96	0.01 (3.7E 8)
Curium-246	96	0.01 (3.7E 8)
Curium-247	96	0.01 (3.7E 8)
Curium-248	96	0.001 (3.7E 7)
Curium-249	96	1000 (3.7E 13)
Dysprosium-155	66	100 (3.7E 12)
Dysprosium-157	66	100 (3.7E 12)
Dysprosium-159	66	100 (3.7E 12)

APPENDIX B TO § 302.4—RADIONUCLIDES—Continued

Radionuclide	Atomic Number	Final RQ Ci (Bq)
Dysprosium-165	66	1000 (3.7E 13)
Dysprosium-166	66	10 (3.7E 11)
Einsteinium-250	99	10 (3.7E 11)
Einsteinium-251	99	1000 (3.7E 13)
Einsteinium-253	99	10 (3.7E 11)
Einsteinium-254m	99	1 (3.7E 10)
Einsteinium-254	99	0.1 (3.7E 9)
Erbium-161	68	100 (3.7E 12)
Erbium-165	68	1000 (3.7E 13)
Erbium-169	68	100 (3.7E 12)
Erbium-171	68	100 (3.7E 12)
Erbium-172	68	10 (3.7E 11)
Europium-145	63	10 (3.7E 11)
Europium-146	63	10 (3.7E 11)
Europium-147	63	10 (3.7E 11)
Europium-148	63	10 (3.7E 11)
Europium-149	63	100 (3.7E 12)
Europium-150 (12.6 hr)	63	1000 (3.7E 13)
Europium-150 (34.2 yr)	63	10 (3.7E 11)
Europium-152m	63	100 (3.7E 12)
Europium-152	63	10 (3.7E 11)
Europium-154	63	10 (3.7E 11)
Europium-155	63	10 (3.7E 11)
Europium-156	63	10 (3.7E 11)
Europium-157	63	10 (3.7E 11)
Europium-158	63	1000 (3.7E 13)
Fermium-252	100	10 (3.7E 11)
Fermium-253	100	10 (3.7E 11)
Fermium-254	100	100 (3.7E 12)
Fermium-255	100	100 (3.7E 12)
Fermium-257	100	1 (3.7E 10)
Fluorine-18	9	1000 (3.7E 13)
Francium-222	87	100 (3.7E 12)
Francium-223	87	100 (3.7E 12)
Gadolinium-145	64	100 (3.7E 12)
Gadolinium-146	64	10 (3.7E 11)
Gadolinium-147	64	10 (3.7E 11)
Gadolinium-148	64	0.001 (3.7E7)
Gadolinium-149	64	100 (3.7E 12)
Gadolinium-151	64	100 (3.7E 12)
Gadolinium-152	64	0.001 (3.7E 7)
Gadolinium-153	64	10 (3.7E 11)
Gadolinium-159	64	1000 (3.7E 13)
Gallium-65	31	1000 (3.7E 13)
Gallium-66	31	10 (3.7E 11)
Gallium-67	31	100 (3.7E 12)
Gallium-68	31	1000 (3.7E 13)
Gallium-70	31	1000 (3.7E 13)
Gallium-72	31	10 (3.7E 11)
Gallium-73	31	100 (3.7E 12)
Germanium-66	32	100 (3.7E 12)
Germanium-67	32	1000 (3.7E 13)
Germanium-68	32	10 (3.7E 11)
Germanium-69	32	10 (3.7E 11)
Germanium-71	32	1000 (3.7E 13)
Germanium-75	32	1000 (3.7E 13)
Germanium-77	32	10 (3.7E 11)
Germanium-78	32	1000 (3.7E 13)
Gold-193	79	100 (3.7E 12)
Gold-194	79	10 (3.7E 11)
Gold-195	79	100 (3.7E 12)
Gold-198m	79	10 (3.7E 11)
Gold-198	79	100 (3.7E 12)
Gold-199	79	100 (3.7E 12)
Gold-200m	79	10 (3.7E 11)
Gold-200	79	1000 (3.7E 13)
Gold-201	79	1000 (3.7E 13)
Hafnium-170	72	100 (3.7E 12)
Hafnium-172	72	1 (3.7E 10)
Hafnium-173	72	100 (3.7E 12)

APPENDIX B TO § 302.4—RADIONUCLIDES—Continued

Radionuclide	Atomic Number	Final RQ Ci (Bq)
Hafnium-175	72	100 (3.7E 12)
Hafnium-177m	72	1000 (3.7E 13)
Hafnium-178m	72	0.1 (3.7E 9)
Hafnium-179m	72	100 (3.7E 12)
Hafnium-180m	72	100 (3.7E 12)
Hafnium-181	72	10 (3.7E 11)
Hafnium-182m	72	100 (3.7E 12)
Hafnium-182	72	0.1 (3.7E 9)
Hafnium-183	72	100 (3.7E 12)
Hafnium-184	72	100 (3.7E 12)
Holmium-155	67	1000 (3.7E 13)
Holmium-157	67	1000 (3.7E 13)
Holmium-159	67	1000 (3.7E 13)
Holmium-161	67	1000 (3.7E 13)
Holmium-162m	67	1000 (3.7E 13)
Holmium-162	67	1000 (3.7E 13)
Holmium-164m	67	1000 (3.7E 13)
Holmium-164	67	1000 (3.7E 13)
Holmium-166m	67	1 (3.7E 10)
Holmium-166	67	100 (3.7E 12)
Holmium-167	67	100 (3.7E 12)
Hydrogen-3	1	100 (3.7E 12)
Indium-109	49	100 (3.7E 12)
Indium-110 (69.1 min)	49	100 (3.7E 12)
Indium-110 (4.9 hr)	49	10 (3.7E 11)
Indium-111	49	100 (3.7E 12)
Indium-112	49	1000 (3.7E 13)
Indium-113m	49	1000 (3.7E 13)
Indium-114m	49	10 (3.7E 11)
Indium-115m	49	100 (3.7E 12)
Indium-115	49	0.1 (3.7E 9)
Indium-116m	49	100 (3.7E 12)
Indium-117m	49	100 (3.7E 12)
Indium-117	49	1000 (3.7E 13)
Indium-119m	49	1000 (3.7E 13)
Iodine-120m	53	100 (3.7E 12)
Iodine-120	53	10 (3.7E 11)
Iodine-121	53	100 (3.7E 12)
Iodine-123	53	10 (3.7E 11)
Iodine-124	53	0.1 (3.7E 9)
Iodine-125	53	0.01 (3.7E 8)
Iodine-126	53	0.01 (3.7E 8)
Iodine-128	53	1000 (3.7E 13)
Iodine-129	53	0.001 (3.7E 7)
Iodine-130	53	1 (3.7E 10)
Iodine-131	53	0.01 (3.7E 8)
Iodine-132m	53	10 (3.7E 11)
Iodine-132	53	10 (3.7E 11)
Iodine-133	53	0.1 (3.7E 9)
Iodine-134	53	100 (3.7E 12)
Iodine-135	53	10 (3.7E 11)
Iridium-182	77	1000 (3.7E 13)
Iridium-184	77	100 (3.7E 12)
Iridium-185	77	100 (3.7E 12)
Iridium-186	77	10 (3.7E 11)
Iridium-187	77	100 (3.7E 12)
Iridium-188	77	10 (3.7E 11)
Iridium-189	77	100 (3.7E 12)
Iridium-190m	77	1000 (3.7E 13)
Iridium-190	77	10 (3.7E 11)
Iridium-192m	77	100 (3.7E 12)
Iridium-192	77	10 (3.7E 11)
Iridium-194m	77	10 (3.7E 11)
Iridium-194	77	100 (3.7E 12)
Iridium-195m	77	100 (3.7E 12)
Iridium-195	77	1000 (3.7E 13)
Iron-52	26	100 (3.7E 12)
Iron-55	26	100 (3.7E 12)
Iron-59	26	10 (3.7E 11)
Iron-60	26	0.1 (3.7E 9)

APPENDIX B TO § 302.4—RADIONUCLIDES—Continued

Radionuclide	Atomic Number	Final RQ Ci (Bq)
Krypton-74	36	10 (3.7E 11)
Krypton-76	36	10 (3.7E 11)
Krypton-77	36	10 (3.7E 11)
Krypton-79	36	100 (3.7E 12)
Krypton-81	36	1000 (3.7E 13)
Krypton-83m	36	1000 (3.7E 13)
Krypton-85m	36	100 (3.7E 12)
Krypton-85	36	1000 (3.7E 13)
Krypton-87	36	10 (3.7E 11)
Krypton-88	36	10 (3.7E 11)
Lanthanum-131	57	1000 (3.7E 13)
Lanthanum-132	57	100 (3.7E 12)
Lanthanum-135	57	1000 (3.7E 13)
Lanthanum-137	57	10 (3.7E 11)
Lanthanum-138	57	1 (3.7E 10)
Lanthanum-140	57	10 (3.7E 11)
Lanthanum-141	57	1000 (3.7E 13)
Lanthanum-142	57	100 (3.7E 12)
Lanthanum-143	57	1000 (3.7E 13)
Lead-195m	82	1000 (3.7E 13)
Lead-198	82	100 (3.7E 12)
Lead-199	82	100 (3.7E 12)
Lead-200	82	100 (3.7E 12)
Lead-201	82	100 (3.7E 12)
Lead-202m	82	10 (3.7E 11)
Lead-202	82	1 (3.7E 10)
Lead-203	82	100 (3.7E 12)
Lead-205	82	100 (3.7E 12)
Lead-209	82	1000 (3.7E 13)
Lead-210	82	0.01 (3.7E 8)
Lead-211	82	100 (3.7E 12)
Lead-212	82	10 (3.7E 11)
Lead-214	82	100 (3.7E 12)
Lutetium-169	71	10 (3.7E 11)
Lutetium-170	71	10 (3.7E 11)
Lutetium-171	71	10 (3.7E 11)
Lutetium-172	71	10 (3.7E 11)
Lutetium-173	71	100 (3.7E 12)
Lutetium-174m	71	10 (3.7E 11)
Lutetium-174	71	10 (3.7E 11)
Lutetium-176m	71	1000 (3.7E 13)
Lutetium-176	71	1 (3.7E 10)
Lutetium-177m	71	10 (3.7E 11)
Lutetium-177	71	100 (3.7E 12)
Lutetium-178m	71	1000 (3.7E 13)
Lutetium-178	71	1000 (3.7E 13)
Lutetium-179	71	1000 (3.7E 13)
Magnesium-28	12	10 (3.7E 11)
Manganese-51	25	1000 (3.7E 13)
Manganese-52m	25	1000 (3.7E 13)
Manganese-52	25	10 (3.7E 11)
Manganese-53	25	1000 (3.7E 13)
Manganese-54	25	10 (3.7E 11)
Manganese-56	25	100 (3.7E 12)
Mendelevium-257	101	100 (3.7E 12)
Mendelevium-258	101	1 (3.7E 10)
Mercury-193m	80	10 (3.7E 11)
Mercury-193	80	100 (3.7E 12)
Mercury-194	80	0.1 (3.7E 9)
Mercury-195m	80	100 (3.7E 12)
Mercury-195	80	100 (3.7E 12)
Mercury-197m	80	1000 (3.7E 13)
Mercury-197	80	1000 (3.7E 13)
Mercury-199m	80	1000 (3.7E 13)
Mercury-203	80	10 (3.7E 11)
Molybdenum-90	42	100 (3.7E 12)
Molybdenum-93m	42	10 (3.7E 11)
Molybdenum-93	42	100 (3.7E 12)
Molybdenum-99	42	100 (3.7E 12)
Molybdenum-101	42	1000 (3.7E 13)

APPENDIX B TO § 302.4—RADIONUCLIDES—Continued

Radionuclide	Atomic Number	Final RQ Ci (Bq)
Neodymium-136	60	1000 (3.7E 13)
Neodymium-138	60	1000 (3.7E 13)
Neodymium-139m	60	100 (3.7E 12)
Neodymium-139	60	1000 (3.7E 13)
Neodymium-141	60	1000 (3.7E 13)
Neodymium-147	60	10 (3.7E 11)
Neodymium-149	60	100 (3.7E 12)
Neodymium-151	60	1000 (3.7E 13)
Neptunium-232	93	1000 (3.7E 13)
Neptunium-233	93	1000 (3.7E 13)
Neptunium-234	93	10 (3.7E 11)
Neptunium-235	93	1000 (3.7E 13)
Neptunium-236 (1.2 E 5 yr)	93	0.1 (3.7E 9)
Neptunium-236 (22.5 hr)	93	100 (3.7E 12)
Neptunium-237	93	0.01 (3.7E 8)
Neptunium-238	93	10 (3.7E 11)
Neptunium-239	93	100 (3.7E 12)
Neptunium-240	93	100 (3.7E 12)
Nickel-56	28	10 (3.7E 11)
Nickel-57	28	10 (3.7E 11)
Nickel-59	28	100 (3.7E 12)
Nickel-63	28	100 (3.7E 12)
Nickel-65	28	100 (3.7E 12)
Nickel-66	28	10 (3.7E 11)
Niobium-88	41	100 (3.7E 12)
Niobium-89 (66 min)	41	100 (3.7E 12)
Niobium-89 (122 min)	41	100 (3.7E 12)
Niobium-90	41	10 (3.7E 11)
Niobium-93m	41	100 (3.7E 12)
Niobium-94	41	10 (3.7E 11)
Niobium-95m	41	100 (3.7E 12)
Niobium-95	41	10 (3.7E 11)
Niobium-96	41	10 (3.7E 11)
Niobium-97	41	100 (3.7E 12)
Niobium-98	41	1000 (3.7E 13)
Osmium-180	76	1000 (3.7E 13)
Osmium-181	76	100 (3.7E 12)
Osmium-182	76	100 (3.7E 12)
Osmium-185	76	10 (3.7E 11)
Osmium-189m	76	1000 (3.7E 13)
Osmium-191m	76	1000 (3.7E 13)
Osmium-191	76	100 (3.7E 12)
Osmium-193	76	100 (3.7E 12)
Osmium-194	76	1 (3.7E 10)
Palladium-100	46	100 (3.7E 12)
Palladium-101	46	100 (3.7E 12)
Palladium-103	46	100 (3.7E 12)
Palladium-107	46	100 (3.7E 12)
Palladium-109	46	1000 (3.7E 13)
Phosphorus-32	15	0.1 (3.7E 9)
Phosphorus-33	15	1 (3.7E 10)
Platinum-186	78	100 (3.7E 12)
Platinum-188	78	100 (3.7E 12)
Platinum-189	78	100 (3.7E 12)
Platinum-191	78	100 (3.7E 12)
Platinum-193m	78	100 (3.7E 12)
Platinum-193	78	1000 (3.7E 13)
Platinum-195m	78	100 (3.7E 12)
Platinum-197m	78	1000 (3.7E 13)
Platinum-197	78	1000 (3.7E 13)
Platinum-199	78	1000 (3.7E 13)
Platinum-200	78	100 (3.7E 12)
Plutonium-234	94	1000 (3.7E 13)
Plutonium-235	94	1000 (3.7E 13)
Plutonium-236	94	0.1 (3.7E 9)
Plutonium-237	94	1000 (3.7E 13)
Plutonium-238	94	0.01 (3.7E 8)
Plutonium-239	94	0.01 (3.7E 8)
Plutonium-240	94	0.01 (3.7E 8)
Plutonium-241	94	1 (3.7E 10)

APPENDIX B TO § 302.4—RADIONUCLIDES—Continued

Radionuclide	Atomic Number	Final RQ Ci (Bq)
Plutonium-242	94	0.01 (3.7E 8)
Plutonium-243	94	1000 (3.7E 13)
Plutonium-244	94	0.01 (3.7E 8)
Plutonium-245	94	100 (3.7E 12)
Polonium-203	84	100 (3.7E 12)
Polonium-205	84	100 (3.7E 12)
Polonium-207	84	10 (3.7E 11)
Polonium-210	84	0.01 (3.7E 8)
Potassium-40	19	1 (3.7E 10)
Potassium-42	19	100 (3.7E 12)
Potassium-43	19	10 (3.7E 11)
Potassium-44	19	100 (3.7E 12)
Potassium-45	19	1000 (3.7E 13)
Praseodymium-136	59	1000 (3.7E 13)
Praseodymium-137	59	1000 (3.7E 13)
Praseodymium-138m	59	100 (3.7E 12)
Praseodymium-139	59	1000 (3.7E 13)
Praseodymium-142m	59	1000 (3.7E 13)
Praseodymium-142	59	100 (3.7E 12)
Praseodymium-143	59	10 (3.7E 11)
Praseodymium-144	59	1000 (3.7E 13)
Praseodymium-145	59	1000 (3.7E 13)
Praseodymium-147	59	1000 (3.7E 13)
Promethium-141	61	1000 (3.7E 13)
Promethium-143	61	100 (3.7E 12)
Promethium-144	61	10 (3.7E 11)
Promethium-145	61	100 (3.7E 12)
Promethium-146	61	10 (3.7E 11)
Promethium-147	61	10 (3.7E 11)
Promethium-148m	61	10 (3.7E 11)
Promethium-148	61	10 (3.7E 11)
Promethium-149	61	100 (3.7E 12)
Promethium-150	61	100 (3.7E 12)
Promethium-151	61	100 (3.7E 12)
Protactinium-227	91	100 (3.7E 12)
Protactinium-228	91	10 (3.7E 11)
Protactinium-230	91	10 (3.7E 11)
Protactinium-231	91	0.01 (3.7E 8)
Protactinium-232	91	10 (3.7E 11)
Protactinium-233	91	100 (3.7E 12)
Protactinium-234	91	10 (3.7E 11)
Radium-223	88	1 (3.7E 10)
Radium-224	88	10 (3.7E 11)
Radium-225	88	1 (3.7E 10)
Radium-226Φ	88	0.1 (3.7E 9)
Radium-227	88	1000 (3.7E 13)
Radium-228	88	0.1 (3.7E 9)
Radon-220	86	0.1 (3.7E 9)
Radon-222	86	0.1 (3.7E 9)
Rhenium-177	75	1000 (3.7E 13)
Rhenium-178	75	1000 (3.7E 13)
Rhenium-181	75	100 (3.7E 12)
Rhenium-182 (12.7 hr)	75	10 (3.7E 11)
Rhenium-182 (64.0 hr)	75	10 (3.7E 11)
Rhenium-184m	75	10 (3.7E 11)
Rhenium-184	75	10 (3.7E 11)
Rhenium-186m	75	10 (3.7E 11)
Rhenium-186	75	100 (3.7E 12)
Rhenium-187	75	1000 (3.7E 13)
Rhenium-188m	75	1000 (3.7E 13)
Rhenium-188	75	1000 (3.7E 13)
Rhenium-189	75	1000 (3.7E 13)
Rhodium-99m	45	100 (3.7E 12)
Rhodium-99	45	10 (3.7E 11)
Rhodium-100	45	10 (3.7E 11)
Rhodium-101m	45	100 (3.7E 12)
Rhodium-101	45	10 (3.7E 11)
Rhodium-102m	45	10 (3.7E 11)
Rhodium-102	45	10 (3.7E 11)
Rhodium-103m	45	1000 (3.7E 13)

APPENDIX B TO § 302.4—RADIONUCLIDES—Continued

Radionuclide	Atomic Number	Final RQ Ci (Bq)
Rhodium-105	45	100 (3.7E 12)
Rhodium-106m	45	10 (3.7E 11)
Rhodium-107	45	1000 (3.7E 13)
Rubidium-79	37	1000 (3.7E 13)
Rubidium-81m	37	1000 (3.7E 13)
Rubidium-81	37	100 (3.7E 12)
Rubidium-82m	37	10 (3.7E 11)
Rubidium-83	37	10 (3.7E 11)
Rubidium-84	37	10 (3.7E 11)
Rubidium-86	37	10 (3.7E 11)
Rubidium-88	37	1000 (3.7E 13)
Rubidium-89	37	1000 (3.7E 13)
Rubidium-87	37	10 (3.7E 11)
Ruthenium-94	44	1000 (3.7E 13)
Ruthenium-97	44	100 (3.7E 12)
Ruthenium-103	44	10 (3.7E 11)
Ruthenium-105	44	100 (3.7E 12)
Ruthenium-106	44	1 (3.7E 10)
Samarium-141m	62	1000 (3.7E 13)
Samarium-141	62	1000 (3.7E 13)
Samarium-142	62	1000 (3.7E 13)
Samarium-145	62	100 (3.7E 12)
Samarium-146	62	0.01 (3.7E 8)
Samarium-147	62	0.01 (3.7E 8)
Samarium-151	62	10 (3.7E 11)
Samarium-153	62	100 (3.7E 12)
Samarium-155	62	1000 (3.7E 13)
Samarium-156	62	100 (3.7E 12)
Scandium-43	21	1000 (3.7E 13)
Scandium-44m	21	10 (3.7E 11)
Scandium-44	21	100 (3.7E 12)
Scandium-46	21	10 (3.7E 11)
Scandium-47	21	100 (3.7E 12)
Scandium-48	21	10 (3.7E 11)
Scandium-49	21	1000 (3.7E 13)
Selenium-70	34	1000 (3.7E 13)
Selenium-73m	34	100 (3.7E 12)
Selenium-73	34	10 (3.7E 11)
Selenium-75	34	10 (3.7E 11)
Selenium-79	34	10 (3.7E 11)
Selenium-81m	34	1000 (3.7E 13)
Selenium-81	34	1000 (3.7E 13)
Selenium-83	34	1000 (3.7E 13)
Silicon-31	14	1000 (3.7E 13)
Silicon-32	14	1 (3.7E 10)
Silver-102	47	100 (3.7E 12)
Silver-103	47	1000 (3.7E 13)
Silver-104m	47	1000 (3.7E 13)
Silver-104	47	1000 (3.7E 13)
Silver-105	47	10 (3.7E 11)
Silver-106m	47	10 (3.7E 11)
Silver-106	47	1000 (3.7E 13)
Silver-108m	47	10 (3.7E 11)
Silver-110m	47	10 (3.7E 11)
Silver-111	47	10 (3.7E 11)
Silver-112	47	100 (3.7E 12)
Silver-115	47	1000 (3.7E 13)
Sodium-22	11	10 (3.7E 11)
Sodium-24	11	10 (3.7E 11)
Strontium-80	38	100 (3.7E 12)
Strontium-81	38	1000 (3.7E 13)
Strontium-83	38	100 (3.7E 12)
Strontium-85m	38	1000 (3.7E 13)
Strontium-85	38	10 (3.7E 11)
Strontium-87m	38	100 (3.7E 12)
Strontium-89	38	10 (3.7E 11)
Strontium-90	38	0.1 (3.7E 9)
Strontium-91	38	10 (3.7E 11)
Strontium-92	38	100 (3.7E 12)
Sulfur-35	16	1 (3.7E 10)

APPENDIX B TO § 302.4—RADIONUCLIDES—Continued

Radionuclide	Atomic Number	Final RQ Ci (Bq)
Tantalum-172	73	100 (3.7E 12)
Tantalum-173	73	100 (3.7E 12)
Tantalum-174	73	100 (3.7E 12)
Tantalum-175	73	100 (3.7E 12)
Tantalum-176	73	10 (3.7E 11)
Tantalum-177	73	1000 (3.7E 13)
Tantalum-178	73	1000 (3.7E 13)
Tantalum-179	73	1000 (3.7E 13)
Tantalum-180m	73	1000 (3.7E 13)
Tantalum-180	73	100 (3.7E 12)
Tantalum-182m	73	1000 (3.7E 13)
Tantalum-182	73	10 (3.7E 11)
Tantalum-183	73	100 (3.7E 12)
Tantalum-184	73	10 (3.7E 11)
Tantalum-185	73	1000 (3.7E 13)
Tantalum-186	73	1000 (3.7E 13)
Technetium-93m	43	1000 (3.7E 13)
Technetium-93	43	100 (3.7E 12)
Technetium-94m	43	100 (3.7E 12)
Technetium-94	43	10 (3.7E 11)
Technetium-96m	43	1000 (3.7E 13)
Technetium-96	43	10 (3.7E 11)
Technetium-97m	43	100 (3.7E 12)
Technetium-97	43	100 (3.7E 12)
Technetium-98	43	10 (3.7E 11)
Technetium-99m	43	100 (3.7E 12)
Technetium-99	43	10 (3.7E 11)
Technetium-101	43	1000 (3.7E 13)
Technetium-104	43	1000 (3.7E 13)
Tellurium-116	52	1000 (3.7E 13)
Tellurium-121m	52	10 (3.7E 11)
Tellurium-121	52	10 (3.7E 11)
Tellurium-123m	52	10 (3.7E 11)
Tellurium-123	52	10 (3.7E 11)
Tellurium-125m	52	10 (3.7E 11)
Tellurium-127m	52	10 (3.7E 11)
Tellurium-127	52	1000 (3.7E 13)
Tellurium-129m	52	10 (3.7E 11)
Tellurium-129	52	1000 (3.7E 13)
Tellurium-131m	52	10 (3.7E 11)
Tellurium-131	52	1000 (3.7E 13)
Tellurium-132	52	10 (3.7E 11)
Tellurium-133m	52	1000 (3.7E 13)
Tellurium-133	52	1000 (3.7E 13)
Tellurium-134	52	1000 (3.7E 13)
Terbium-147	65	100 (3.7E 12)
Terbium-149	65	100 (3.7E 12)
Terbium-150	65	100 (3.7E 12)
Terbium-151	65	10 (3.7E 11)
Terbium-153	65	100 (3.7E 12)
Terbium-154	65	10 (3.7E 11)
Terbium-155	65	100 (3.7E 12)
Terbium-156m (5.0 hr)	65	1000 (3.7E 13)
Terbium-156m (24.4 hr)	65	1000 (3.7E 13)
Terbium-156	65	10 (3.7E 11)
Terbium-157	65	100 (3.7E 12)
Terbium-158	65	10 (3.7E 11)
Terbium-160	65	10 (3.7E 11)
Terbium-161	65	100 (3.7E 12)
Thallium-194m	81	100 (3.7E 12)
Thallium-194	81	1000 (3.7E 13)
Thallium-195	81	100 (3.7E 12)
Thallium-197	81	100 (3.7E 12)
Thallium-198m	81	100 (3.7E 12)
Thallium-198	81	10 (3.7E 11)
Thallium-199	81	100 (3.7E 12)
Thallium-200	81	10 (3.7E 11)
Thallium-201	81	1000 (3.7E 13)
Thallium-202	81	10 (3.7E 11)
Thallium-204	81	10 (3.7E 11)

APPENDIX B TO § 302.4—RADIONUCLIDES—Continued

Radionuclide	Atomic Number	Final RQ Ci (Bq)
Thorium-226	90	100 (3.7E 12)
Thorium-227	90	1 (3.7E 10)
Thorium-228	90	0.01 (3.7E 8)
Thorium-229	90	0.001 (3.7E 7)
Thorium-230	90	0.01 (3.7E 8)
Thorium-231	90	100 (3.7E 12)
Thorium-232Φ	90	0.001 (3.7E 7)
Thorium-234	90	100 (3.7E 12)
Thulium-162	69	1000 (3.7E 13)
Thulium-166	69	10 (3.7E 11)
Thulium-167	69	100 (3.7E 12)
Thulium-170	69	10 (3.7E 11)
Thulium-171	69	100 (3.7E 12)
Thulium-172	69	100 (3.7E 12)
Thulium-173	69	100 (3.7E 12)
Thulium-175	69	1000 (3.7E 13)
Tin-110	50	100 (3.7E 12)
Tin-111	50	1000 (3.7E 13)
Tin-113	50	10 (3.7E 11)
Tin-117m	50	100 (3.7E 12)
Tin-119m	50	10 (3.7E 11)
Tin-121m	50	10 (3.7E 11)
Tin-121	50	1000 (3.7E 13)
Tin-123m	50	1000 (3.7E 13)
Tin-123	50	10 (3.7E 11)
Tin-125	50	10 (3.7E 11)
Tin-126	50	1 (3.7E 10)
Tin-127	50	100 (3.7E 12)
Tin-128	50	1000 (3.7E 13)
Titanium-44	22	1 (3.7E 10)
Titanium-45	22	1000 (3.7E 13)
Tungsten-176	74	1000 (3.7E 13)
Tungsten-177	74	100 (3.7E 12)
Tungsten-178	74	100 (3.7E 12)
Tungsten-179	74	1000 (3.7E 13)
Tungsten-181	74	100 (3.7E 12)
Tungsten-185	74	10 (3.7E 11)
Tungsten-187	74	100 (3.7E 12)
Tungsten-188	74	10 (3.7E 11)
Uranium-230	92	1 (3.7E 10)
Uranium-231	92	1000 (3.7E 13)
Uranium-232	92	0.01 (3.7E 8)
Uranium-233	92	0.1 (3.7E 9)
Uranium-234φ	92	0.1 (3.7E 9)
Uranium-235φ	92	0.1 (3.7E 9)
Uranium-236	92	0.1 (3.7E 9)
Uranium-237	92	100 (3.7E 12)
Uranium-238φ	92	0.1& (3.7E 9)
Uranium-239	92	1000 (3.7E 13)
Uranium-240	92	1000 (3.7E 13)
Vanadium-47	23	1000 (3.7E 13)
Vanadium-48	23	10 (3.7E 11)
Vanadium-49	23	1000 (3.7E 13)
Xenon-120	54	100 (3.7E 12)
Xenon-121	54	10 (3.7E 11)
Xenon-122	54	100 (3.7E 12)
Xenon-123	54	10 (3.7E 11)
Xenon-125	54	100 (3.7E 12)
Xenon-127	54	100 (3.7E 12)
Xenon-129m	54	1000 (3.7E 13)
Xenon-131m	54	1000 (3.7E 13)
Xenon-133m	54	1000 (3.7E 13)
Xenon-133	54	1000 (3.7E 13)
Xenon-135m	54	10 (3.7E 11)
Xenon-135	54	100 (3.7E 12)
Xenon-138	54	10 (3.7E 11)
Ytterbium-162	70	1000 (3.7E 13)
Ytterbium-166	70	10 (3.7E 11)
Ytterbium-167	70	1000 (3.7E 13)
Ytterbium-169	70	10 (3.7E 11)

APPENDIX B TO § 302.4—RADIONUCLIDES—Continued

Radionuclide	Atomic Number	Final RQ Ci (Bq)
Ytterbium-175	70	100 (3.7E 12)
Ytterbium-177	70	1000 (3.7E 13)
Ytterbium-178	70	1000 (3.7E 13)
Yttrium-86m	39	1000 (3.7E 13)
Yttrium-86	39	10 (3.7E 11)
Yttrium-87	39	10 (3.7E 11)
Yttrium-88	39	10 (3.7E 11)
Yttrium-90m	39	100 (3.7E 12)
Yttrium-90	39	10 (3.7E 11)
Yttrium-91m	39	1000 (3.7E 13)
Yttrium-91	39	10 (3.7E 11)
Yttrium-92	39	100 (3.7E 12)
Yttrium-93	39	100 (3.7E 12)
Yttrium-94	39	1000 (3.7E 13)
Yttrium-95	39	1000 (3.7E 13)
Zinc-62	30	100 (3.7E 12)
Zinc-63	30	1000 (3.7E 13)
Zinc-65	30	10 (3.7E 11)
Zinc-69m	30	100 (3.7E 12)
Zinc-69	30	1000 (3.7E 13)
Zinc-71m	30	100 (3.7E 12)
Zinc-72	30	100 (3.7E 12)
Zirconium-86	40	100 (3.7E 12)
Zirconium-88	40	10 (3.7E 11)
Zirconium-89	40	100 (3.7E 12)
Zirconium-93	40	1 (3.7E 10)
Zirconium-95	40	10 (3.7E 11)
Zirconium-97	40	10 (3.7E 11)

Ci—Curie. The curie represents a rate of radioactive decay. One curie is the quantity of any radioactive nuclide which undergoes 3.7E 10 disintegrations per second.

Bq—Becquerel. The becquerel represents a rate of radioactive decay. One becquerel is the quantity of any radioactive nuclide which undergoes one disintegration per second. One curie is equal to 3.7E 10 becquerel.

@—Final RQs for all radionuclides apply to chemical compounds containing the radionuclides and elemental forms regardless of the diameter of pieces of solid material.

&—The adjusted RQ of one curie applies to all radionuclides not otherwise listed. Whenever the RQs in table 302.4 and this appendix to the table are in conflict, the lowest RQ shall apply. For example, uranyl acetate and uranyl nitrate have adjusted RQs shown in table 302.4 of 100 pounds, equivalent to about one-tenth the RQ level for uranium-238 listed in this appendix.

E—Exponent to the base 10. For example, 1.3E 2 is equal to 130 while 1.3E 3 is equal to 1300.

m—Signifies a nuclear isomer which is a radionuclide in a higher energy metastable state relative to the parent isotope.

φ—Notification requirements for releases of mixtures or solutions of radionuclides can be found in § 302.6(b) of this rule. Final RQs for the following four common radionuclide mixtures are provided: radium-226 in secular equilibrium with its daughters (0.053 curie); natural uranium (0.1 curie); natural uranium in secular equilibrium with its daughters (0.052 curie); and natural thorium in secular equilibrium with its daughters (0.011 curie).

[54 FR 33449, Aug. 14, 1989]

EDITORIAL NOTE: For FEDERAL REGISTER citations affecting § 302.4, see the List of CFR Sections Affected, which appears in the Finding Aids section of the printed volume and at *www.fdsys.gov*.

§ 302.5 Determination of reportable quantities.

(a) *Listed hazardous substances.* The quantity listed in the column ''Final RQ'' for each substance in table 302.4, or in appendix B to table 302.4, is the reportable quantity (RQ) for that substance. The RQs in table 302.4 are in units of pounds based on chemical toxicity, while the RQs in appendix B to table 302.4 are in units of curies based on radiation hazard. Whenever the RQs in table 302.4 and appendix B to the table are in conflict, the lowest RQ shall apply.

(b) *Unlisted hazardous substances.* Unlisted hazardous substances designated by 40 CFR 302.4(b) have the reportable quantity of 100 pounds, except for those unlisted hazardous wastes which exhibit toxicity identified in 40 CFR 261.24. Unlisted hazardous wastes which exhibit toxicity have the reportable quantities listed in Table 302.4 for the contaminant on which the characteristic of toxicity is based. The reportable quantity applies to the waste itself, not merely to the toxic contaminant. If an unlisted hazardous waste exhibits toxicity on the basis of more than one contaminant, the reportable quantity for that waste shall be the lowest of the reportable quantities listed in Table 302.4 for those contaminants. If an unlisted hazardous waste exhibits the characteristic of toxicity and one or more of the other characteristics referenced in 40 CFR 302.4(b), the reportable quantity for that waste shall be the lowest of the applicable reportable quantities.

[51 FR 34547, Sept. 29, 1986, as amended at 54 FR 22538, May 24, 1989; 67 FR 45356, July 9, 2002]

§ 302.6 Notification requirements.

(a) Any person in charge of a vessel or an offshore or an onshore facility shall, as soon as he or she has knowledge of any release (other than a federally permitted release or application of a pesticide) of a hazardous substance from such vessel or facility in a quantity equal to or exceeding the reportable quantity determined by this part in any 24-hour period, immediately notify the National Response Center (1–800–424–8802; in Washington, DC 202–267–2675; the facsimile number is 202–267–1322).

(b) Releases of mixtures or solutions (including hazardous waste streams) of

APPENDIX 16

EPCRA EXTREMELY HAZARDOUS SUBSTANCE LIST - 40 CFR 335.50

Release means any spilling, leaking, pumping, pouring, emitting, emptying, discharging, injecting, escaping, leaching, dumping, or disposing into the environment (including the abandonment or discarding of barrels, containers, and other closed receptacles) of any hazardous chemical, EHS, or CERCLA hazardous substance.

Reportable quantity means, for any CERCLA hazardous substance, the quantity established in Table 302.4 of 40 CFR 302.4, for such substance. For any EHS, reportable quantity means the quantity established in Appendices A and B of this part for such substance. Unless and until superseded by regulations establishing a reportable quantity for newly listed EHSs or CERCLA hazardous substances, a weight of 1 pound shall be the reportable quantity.

SERC means the State Emergency Response Commission for the State in which the facility is located except where the facility is located in Indian Country, in which case, SERC means the Emergency Response Commission for the Tribe under whose jurisdiction the facility is located. In the absence of a SERC for a State or Indian Tribe, the Governor or the chief executive officer of the tribe, respectively, shall be the SERC. Where there is a cooperative agreement between a State and a Tribe, the SERC shall be the entity identified in the agreement.

Solution means any aqueous or organic solutions, slurries, viscous solutions, suspensions, emulsions, or pastes.

State means any State of the United States, the District of Columbia, the Commonwealth of Puerto Rico, Guam, American Samoa, the United States Virgin Islands, the Northern Mariana Islands, any other territory or possession over which the United States has jurisdiction and Indian Country.

Threshold planning quantity means, for a substance listed in Appendices A and B of this part, the quantity listed in the column ''threshold planning quantity'' for that substance.

[73 FR 65462, Nov. 3, 2008, as amended at 73 FR 76960, Dec. 18, 2008; 77 FR 16688, Mar. 22, 2012]

Appendix A to Part 355—The List of Extremely Hazardous Substances and Their Threshold Planning Quantities

[Alphabetical Order]

CAS No.	Chemical name	Notes	Reportable quantity * (pounds)	Threshold planning quantity (pounds)
75–86–5	Acetone Cyanohydrin		10	1,000
1752–30–3	Acetone Thiosemicarbazide		1,000	1,000/10,000
107–02–8	Acrolein		1	500
79–06–1	Acrylamide	f	5,000	1,000/10,000
107–13–1	Acrylonitrile	f	100	10,000
814–68–6	Acrylyl Chloride	d	100	100
111–69–3	Adiponitrile	f	1,000	1,000
116–06–3	Aldicarb	b	1	100/10,000
309–00–2	Aldrin		1	500/10,000
107–18–6	Allyl Alcohol		100	1,000
107–11–9	Allylamine		500	500
20859–73–8	Aluminum Phosphide	a	100	500
54–62–6	Aminopterin		500	500/10,000
78–53–5	Amiton		500	500
3734–97–2	Amiton Oxalate		100	100/10,000
7664–41–7	Ammonia	f	100	500
300–62–9	Amphetamine		1,000	1,000
62–53–3	Aniline	f	5,000	1,000
88–05–1	Aniline, 2,4,6-Trimethyl-		500	500
7783–70–2	Antimony Pentafluoride		500	500
1397–94–0	Antimycin A	b	1,000	1,000/10,000
86–88–4	ANTU		100	500/10,000
1303–28–2	Arsenic Pentoxide		1	100/10,000
1327–53–3	Arsenous Oxide	d	1	100/10,000
7784–34–1	Arsenous Trichloride		1	500
7784–42–1	Arsine		100	100
2642–71–9	Azinphos-Ethyl		100	100/10,000
86–50–0	Azinphos-Methyl		1	10/10,000
98–87–3	Benzal Chloride		5,000	500

[Alphabetical Order]

CAS No.	Chemical name	Notes	Reportable quantity * (pounds)	Threshold planning quantity (pounds)
98–16–8	Benzenamine, 3-(Trifluoromethyl)-		500	500
100–14–1	Benzene, 1-(Chloromethyl)-4-Nitro-		500	500/10,000
98–05–5	Benzenearsonic Acid		10	10/10,000
3615–21–2	Benzimidazole, 4,5-Dichloro-2-(Trifluoromethyl)-	c	500	500/10,000
98–07–7	Benzotrichloride		10	100
100–44–7	Benzyl Chloride		100	500
140–29–4	Benzyl Cyanide	d	500	500
15271–41–7	Bicyclo[2.2.1]Heptane-2-Carbonitrile, 5-Chloro-6-((((Methylamino)Carbonyl)Oxy)Imino)-, (1s-(1-alpha,2-beta,4-alpha,5-alpha,6E))-.		500	500/10,000
534–07–6	Bis(Chloromethyl) Ketone		10	10/10,000
4044–65–9	Bitoscanate		500	500/10,000
10294–34–5	Boron Trichloride		500	500
7637–07–2	Boron Trifluoride		500	500
353–42–4	Boron Trifluoride Compound With Methyl Ether (1:1)		1,000	1,000
28772–56–7	Bromadiolone		100	100/10,000
7726–95–6	Bromine	f	500	500
1306–19–0	Cadmium Oxide		100	100/10,000
2223–93–0	Cadmium Stearate	b	1,000	1,000/10,000
7778–44–1	Calcium Arsenate		1	500/10,000
8001–35–2	Camphechlor		1	500/10,000
56–25–7	Cantharidin		100	100/10,000
51–83–2	Carbachol Chloride		500	500/10,000
26419–73–8	Carbamic Acid, Methyl-, O-(((2,4-Dimethyl-1, 3-Dithiolan-2-yl)Methylene)Amino)-.		100	100/10,000
1563–66–2	Carbofuran		10	10/10,000
75–15–0	Carbon Disulfide	f	100	10,000
786–19–6	Carbophenothion		500	500
57–74–9	Chlordane		1	1,000
470–90–6	Chlorfenvinfos		500	500
7782–50–5	Chlorine		10	100
24934–91–6	Chlormephos		500	500
999–81–5	Chlormequat Chloride	d	100	100/10,000
79–11–8	Chloroacetic Acid		100	100/10,000
107–07–3	Chloroethanol		500	500
627–11–2	Chloroethyl Chloroformate		1,000	1,000
67–66–3	Chloroform	f	10	10,000
542–88–1	Chloromethyl Ether	d	10	100
107–30–2	Chloromethyl Methyl Ether	b	10	100
3691–35–8	Chlorophacinone		100	100/10,000
1982–47–4	Chloroxuron		500	500/10,000
21923–23–9	Chlorthiophos	d	500	500
10025–73–7	Chromic Chloride		1	1/10,000
62207–76–5	Cobalt, ((2,2′-(1,2-Ethanediylbis (Nitrilomethylidyne)) Bis(6-Fluorophenolato))(2-)-N,N′,O,O′)-.		100	100/10,000
10210–68–1	Cobalt Carbonyl	d	10	10/10,000
64–86–8	Colchicine	d	10	10/10,000
56–72–4	Coumaphos		10	100/10,000
5836–29–3	Coumatetralyl		500	500/10,000
95–48–7	Cresol, o-		100	1,000/10,000
535–89–7	Crimidine		100	100/10,000
4170–30–3	Crotonaldehyde		100	1,000
123–73–9	Crotonaldehyde, (E)-		100	1,000
506–68–3	Cyanogen Bromide		1,000	500/10,000
506–78–5	Cyanogen Iodide		1,000	1,000/10,000
2636–26–2	Cyanophos		1,000	1,000
675–14–9	Cyanuric Fluoride		100	100
66–81–9	Cycloheximide		100	100/10,000
108–91–8	Cyclohexylamine	f	10,000	10,000
17702–41–9	Decaborane(14)		500	500/10,000
8065–48–3	Demeton		500	500
919–86–8	Demeton-S-Methyl		500	500
10311–84–9	Dialifor		100	100/10,000
19287–45–7	Diborane		100	100
111–44–4	Dichloroethyl ether		10	10,000
149–74–6	Dichloromethylphenylsilane		1,000	1,000
62–73–7	Dichlorvos		10	1,000
141–66–2	Dicrotophos		100	100
1464–53–5	Diepoxybutane		10	500
814–49–3	Diethyl Chlorophosphate	d	500	500
71–63–6	Digitoxin	b	100	100/10,000

[Alphabetical Order]

CAS No.	Chemical name	Notes	Reportable quantity * (pounds)	Threshold planning quantity (pounds)
2238–07–5	Diglycidyl Ether		1,000	1,000
20830–75–5	Digoxin	d	10	10/10,000
115–26–4	Dimefox		500	500
60–51–5	Dimethoate		10	500/10,000
2524–03–0	Dimethyl Phosphorochloridothioate		500	500
77–78–1	Dimethyl sulfate		100	500
75–78–5	Dimethyldichlorosilane	d	500	500
57–14–7	Dimethylhydrazine		10	1,000
99–98–9	Dimethyl-p-Phenylenediamine		10	10/10,000
644–64–4	Dimetilan		1	500/10,000
534–52–1	Dinitrocresol		10	10/10,000
88–85–7	Dinoseb		1,000	100/10,000
1420–07–1	Dinoterb		500	500/10,000
78–34–2	Dioxathion		500	500
82–66–6	Diphacinone		10	10/10,000
152–16–9	Diphosphoramide, Octamethyl-		100	100
298–04–4	Disulfoton		1	500
514–73–8	Dithiazanine Iodide		500	500/10,000
541–53–7	Dithiobiuret		100	100/10,000
316–42–7	Emetine, Dihydrochloride	d	1	1/10,000
115–29–7	Endosulfan		1	10/10,000
2778–04–3	Endothion		500	500/10,000
72–20–8	Endrin		1	500/10,000
106–89–8	Epichlorohydrin	f	100	1,000
2104–64–5	EPN		100	100/10,000
50–14–6	Ergocalciferol	b	1,000	1,000/10,000
379–79–3	Ergotamine Tartrate		500	500/10,000
1622–32–8	Ethanesulfonyl Chloride, 2-Chloro-		500	500
10140–87–1	Ethanol, 1,2-Dichloro-, Acetate		1,000	1,000
563–12–2	Ethion		10	1,000
13194–48–4	Ethoprophos		1,000	1,000
538–07–8	Ethylbis(2-Chloroethyl)Amine	d	500	500
371–62–0	Ethylene Fluorohydrin	b, d	10	10
75–21–8	Ethylene Oxide	f	10	1,000
107–15–3	Ethylenediamine		5,000	10,000
151–56–4	Ethyleneimine		1	500
542–90–5	Ethylthiocyanate		10,000	10,000
22224–92–6	Fenamiphos		10	10/10,000
115–90–2	Fensulfothion	d	500	500
4301–50–2	Fluenetil		100	100/10,000
7782–41–4	Fluorine	e	10	500
640–19–7	Fluoroacetamide		100	100/10,000
144–49–0	Fluoroacetic Acid		10	10/10,000
359–06–8	Fluoroacetyl Chloride	b	10	10
51–21–8	Fluorouracil		500	500/10,000
944–22–9	Fonofos		500	500
50–00–0	Formaldehyde	f	100	500
107–16–4	Formaldehyde Cyanohydrin	d	1,000	1,000
23422–53–9	Formetanate Hydrochloride	d	100	500/10,000
2540–82–1	Formothion		100	100
17702–57–7	Formparanate		100	100/10,000
21548–32–3	Fosthietan		500	500
3878–19–1	Fuberidazole		100	100/10,000
110–00–9	Furan		100	500
13450–90–3	Gallium Trichloride		500	500/10,000
77–47–4	Hexachlorocyclopentadiene	d	10	100
4835–11–4	Hexamethylenediamine, N,N′-Dibutyl-		500	500
302–01–2	Hydrazine		1	1,000
74–90–8	Hydrocyanic Acid		10	100
7647–01–0	Hydrogen Chloride (gas only)	f	5,000	500
7664–39–3	Hydrogen Fluoride		100	100
7722–84–1	Hydrogen Peroxide (Conc >52%)	f	1,000	1,000
7783–07–5	Hydrogen Selenide		10	10
7783–06–4	Hydrogen Sulfide	f	100	500
123–31–9	Hydroquinone	f	100	500/10,000
13463–40–6	Iron, Pentacarbonyl-		100	100
297–78–9	Isobenzan		100	100/10,000
78–82–0	Isobutyronitrile	d	1,000	1,000
102–36–3	Isocyanic Acid, 3,4-Dichlorophenyl Ester		500	500/10,000
465–73–6	Isodrin		1	100/10,000
55–91–4	Isofluorphate	b	100	100

[Alphabetical Order]

CAS No.	Chemical name	Notes	Reportable quantity * (pounds)	Threshold planning quantity (pounds)
4098–71–9	Isophorone Diisocyanate	g	500	500
108–23–6	Isopropyl Chloroformate		1,000	1,000
119–38–0	Isopropylmethyl-pyrazolyl Dimethylcarbamate		100	500
78–97–7	Lactonitrile		1,000	1,000
21609–90–5	Leptophos		500	500/10,000
541–25–3	Lewisite	b, d	10	10
58–89–9	Lindane		1	1,000/10,000
7580–67–8	Lithium Hydride	a	100	100
109–77–3	Malononitrile		1,000	500/10,000
12108–13–3	Manganese, Tricarbonyl Methylcyclopentadienyl	d	100	100
51–75–2	Mechlorethamine	b	10	10
950–10–7	Mephosfolan		500	500
1600–27–7	Mercuric Acetate		500	500/10,000
7487–94–7	Mercuric Chloride		500	500/10,000
21908–53–2	Mercuric Oxide		500	500/10,000
10476–95–6	Methacrolein Diacetate		1,000	1,000
760–93–0	Methacrylic Anhydride		500	500
126–98–7	Methacrylonitrile	d	1,000	500
920–46–7	Methacryloyl Chloride		100	100
30674–80–7	Methacryloyloxyethyl Isocyanate	d	100	100
10265–92–6	Methamidophos		100	100/10,000
558–25–8	Methanesulfonyl Fluoride		1,000	1,000
950–37–8	Methidathion		500	500/10,000
2032–65–7	Methiocarb		10	500/10,000
16752–77–5	Methomyl	d	100	500/10,000
151–38–2	Methoxyethylmercuric Acetate		500	500/10,000
80–63–7	Methyl 2-Chloroacrylate		500	500
74–83–9	Methyl Bromide	f	1,000	1,000
79–22–1	Methyl Chloroformate	d	1,000	500
60–34–4	Methyl Hydrazine		10	500
624–83–9	Methyl Isocyanate		10	500
556–61–6	Methyl Isothiocyanate	a	500	500
74–93–1	Methyl Mercaptan	f	100	500
3735–23–7	Methyl Phenkapton		500	500
676–97–1	Methyl Phosphonic Dichloride	a	100	100
556–64–9	Methyl Thiocyanate		10,000	10,000
78–94–4	Methyl Vinyl Ketone		10	10
502–39–6	Methylmercuric Dicyanamide		500	500/10,000
75–79–6	Methyltrichlorosilane	d	500	500
1129–41–5	Metolcarb		1,000	100/10,000
7786–34–7	Mevinphos		10	500
315–18–4	Mexacarbate	d	1,000	500/10,000
50–07–7	Mitomycin C		10	500/10,000
6923–22–4	Monocrotophos		10	10/10,000
2763–96–4	Muscimol		1,000	500/10,000
505–60–2	Mustard Gas	d	500	500
13463–39–3	Nickel Carbonyl		10	1
54–11–5	Nicotine	b	100	100
65–30–5	Nicotine Sulfate		100	100/10,000
7697–37–2	Nitric Acid		1,000	1,000
10102–43–9	Nitric Oxide	b	10	100
98–95–3	Nitrobenzene	f	1,000	10,000
1122–60–7	Nitrocyclohexane		500	500
10102–44–0	Nitrogen Dioxide		10	100
62–75–9	Nitrosodimethylamine	d	10	1,000
991–42–4	Norbormide		100	100/10,000
	Organorhodium Complex (PMN–82–147)		10	10/10,000
630–60–4	Ouabain	b	100	100/10,000
23135–22–0	Oxamyl		100	100/10,000
78–71–7	Oxetane, 3,3-Bis(Chloromethyl)-		500	500
2497–07–6	Oxydisulfoton	d	500	500
10028–15–6	Ozone		100	100
1910–42–5	Paraquat Dichloride		10	10/10,000
2074–50–2	Paraquat Methosulfate		10	10/10,000
56–38–2	Parathion	b	10	100
298–00–0	Parathion-Methyl	b	100	100/10,000
12002–03–8	Paris Green		1	500/10,000
19624–22–7	Pentaborane		500	500
2570–26–5	Pentadecylamine		100	100/10,000
79–21–0	Peracetic Acid		500	500
594–42–3	Perchloromethylmercaptan		100	500

[Alphabetical Order]

CAS No.	Chemical name	Notes	Reportable quantity * (pounds)	Threshold planning quantity (pounds)
108–95–2	Phenol		1,000	500/10,000
4418–66–0	Phenol, 2,2′-Thiobis(4-Chloro-6-Methyl)-		100	100/10,000
64–00–6	Phenol, 3-(1-Methylethyl)-, Methylcarbamate		10	500/10,000
58–36–6	Phenoxarsine, 10,10′-Oxydi-		500	500/10,000
696–28–6	Phenyl Dichloroarsine	d	1	500
59–88–1	Phenylhydrazine Hydrochloride		1,000	1,000/10,000
62–38–4	Phenylmercury Acetate		100	500/10,000
2097–19–0	Phenylsilatrane	d	100	100/10,000
103–85–5	Phenylthiourea		100	100/10,000
298–02–2	Phorate		10	10
4104–14–7	Phosacetim		100	100/10,000
947–02–4	Phosfolan		100	100/10,000
75–44–5	Phosgene	f	10	10
13171–21–6	Phosphamidon		100	100
7803–51–2	Phosphine		100	500
2703–13–1	Phosphonothioic Acid, Methyl-, O-Ethyl O-(4-(Methylthio) Phenyl) Ester.		500	500
50782–69–9	Phosphonothioic Acid, Methyl-, S-(2-(Bis(1Methylethyl)Amino)Ethyl) O-Ethyl Ester.		100	100
2665–30–7	Phosphonothioic Acid, Methyl-, O-(4-Nitrophenyl) O-Phenyl Ester.		500	500
3254–63–5	Phosphoric Acid, Dimethyl 4-(Methylthio)Phenyl Ester.		500	500
2587–90–8	Phosphorothioic Acid, O,O-Dimethyl-S-(2-Methylthio) Ethyl Ester.	b, c	500	500
7723–14–0	Phosphorus	a, d	1	100
10025–87–3	Phosphorus Oxychloride		1,000	500
10026–13–8	Phosphorus Pentachloride	a	500	500
7719–12–2	Phosphorus Trichloride		1,000	1,000
57–47–6	Physostigmine		100	100/10,000
57–64–7	Physostigmine, Salicylate (1:1)		100	100/10,000
124–87–8	Picrotoxin		500	500/10,000
110–89–4	Piperidine		1,000	1,000
23505–41–1	Pirimifos-Ethyl		1,000	1,000
10124–50–2	Potassium Arsenite		1	500/10,000
151–50–8	Potassium Cyanide	a	10	100
506–61–6	Potassium Silver Cyanide	a	1	500
2631–37–0	Promecarb	d	1,000	500/10,000
106–96–7	Propargyl Bromide		10	10
57–57–8	Propiolactone, Beta-		10	500
107–12–0	Propionitrile		10	500
542–76–7	Propionitrile, 3-Chloro-		1,000	1,000
70–69–9	Propiophenone, 4-Amino-	c	100	100/10,000
109–61–5	Propyl Chloroformate		500	500
75–56–9	Propylene Oxide	f	100	10,000
75–55–8	Propyleneimine		1	10,000
2275–18–5	Prothoate		100	100/10,000
129–00–0	Pyrene	b	5,000	1,000/10,000
140–76–1	Pyridine, 2-Methyl-5-Vinyl-		500	500
504–24–5	Pyridine, 4-Amino-	d	1,000	500/10,000
1124–33–0	Pyridine, 4-Nitro-,l-Oxide		500	500/10,000
53558–25–1	Pyriminil	d	100	100/10,000
14167–18–1	Salcomine		500	500/10,000
107–44–8	Sarin	d	10	10
7783–00–8	Selenious Acid		10	1,000/10,000
7791–23–3	Selenium Oxychloride		500	500
563–41–7	Semicarbazide Hydrochloride		1,000	1,000/10,000
3037–72–7	Silane, (4-Aminobutyl)Diethoxymethyl-		1,000	1,000
7631–89–2	Sodium Arsenate		1	1,000/10,000
7784–46–5	Sodium Arsenite		1	500/10,000
26628–22–8	Sodium Azide ($Na(N_3)$)	a	1,000	500
124–65–2	Sodium Cacodylate		100	100/10,000
143–33–9	Sodium Cyanide (Na(CN))	a	10	100
62–74–8	Sodium Fluoroacetate		10	10/10,000
13410–01–0	Sodium Selenate		100	100/10,000
10102–18–8	Sodium Selenite	d	100	100/10,000
10102–20–2	Sodium Tellurite		500	500/10,000
900–95–8	Stannane, Acetoxytriphenyl-	c	500	500/10,000
57–24–9	Strychnine	b	10	100/10,000
60–41–3	Strychnine Sulfate		10	100/10,000
3689–24–5	Sulfotep		100	500

[Alphabetical Order]

CAS No.	Chemical name	Notes	Reportable quantity * (pounds)	Threshold planning quantity (pounds)
3569–57–1	Sulfoxide, 3-Chloropropyl Octyl		500	500
7446–09–5	Sulfur Dioxide	f	500	500
7783–60–0	Sulfur Tetrafluoride		100	100
7446–11–9	Sulfur Trioxide	a	100	100
7664–93–9	Sulfuric Acid		1,000	1,000
77–81–6	Tabun	b, d	10	10
7783–80–4	Tellurium Hexafluoride	e	100	100
107–49–3	TEPP		10	100
13071–79–9	Terbufos	d	100	100
78–00–2	Tetraethyllead	b	10	100
597–64–8	Tetraethyltin	b	100	100
75–74–1	Tetramethyllead	b, f	100	100
509–14–8	Tetranitromethane		10	500
10031–59–1	Thallium Sulfate	d	100	100/10,000
6533–73–9	Thallous Carbonate	b, d	100	100/10,000
7791–12–0	Thallous Chloride	b, d	100	100/10,000
2757–18–8	Thallous Malonate	b, d	100	100/10,000
7446–18–6	Thallous Sulfate		100	100/10,000
2231–57–4	Thiocarbazide		1,000	1,000/10,000
39196–18–4	Thiofanox		100	100/10,000
297–97–2	Thionazin		100	500
108–98–5	Thiophenol		100	500
79–19–6	Thiosemicarbazide		100	100/10,000
5344–82–1	Thiourea, (2-Chlorophenyl)-		100	100/10,000
614–78–8	Thiourea, (2-Methylphenyl)-		500	500/10,000
7550–45–0	Titanium Tetrachloride		1,000	100
584–84–9	Toluene 2,4-Diisocyanate		100	500
91–08–7	Toluene 2,6-Diisocyanate		100	100
110–57–6	Trans-1,4-Dichlorobutene		500	500
1031–47–6	Triamiphos		500	500/10,000
24017–47–8	Triazofos		500	500
76–02–8	Trichloroacetyl Chloride		500	500
115–21–9	Trichloroethylsilane	d	500	500
327–98–0	Trichloronate	e	500	500
98–13–5	Trichlorophenylsilane	d	500	500
1558–25–4	Trichloro(Chloromethyl)Silane		100	100
27137–85–5	Trichloro(Dichlorophenyl) Silane		500	500
998–30–1	Triethoxysilane		500	500
75–77–4	Trimethylchlorosilane		1,000	1,000
824–11–3	Trimethylolpropane Phosphite	d	100	100/10,000
1066–45–1	Trimethyltin Chloride		500	500/10,000
639–58–7	Triphenyltin Chloride		500	500/10,000
555–77–1	Tris(2-Chloroethyl)Amine	d	100	100
2001–95–8	Valinomycin	b	1,000	1,000/10,000
1314–62–1	Vanadium Pentoxide		1,000	100/10,000
108–05–4	Vinyl Acetate Monomer	f	5,000	1,000
81–81–2	Warfarin		100	500/10,000
129–06–6	Warfarin Sodium	d	100	100/10,000
28347–13–9	Xylylene Dichloride		100	100/10,000
58270–08–9	Zinc, Dichloro(4,4-Dimethyl-5((((Methylamino)Carbonyl) Oxy)Imino)Pentanenitrile)-, (T-4)-.		100	100/10,000
1314–84–7	Zinc Phosphide	a	100	500

* Only the statutory or final RQ is shown. For more information, see 40 CFR 355.61.

Notes:

a. This material is a reactive solid. The TPQ does not default to 10,000 pounds for non-powder, non-molten, non-solution form.

b. The calculated TPQ changed after technical review as described in a technical support document for the final rule, April 22, 1987.

c. Chemicals added by final rule, April 22, 1987.

d. Revised TPQ based on new or re-evaluated toxicity data, April 22, 1987.

e. The TPQ was revised due to calculation error, April 22, 1987.

f. Chemicals on the original list that do not meet toxicity criteria but because of their acute lethality, high production volume and known risk are considered chemicals of concern (''Other chemicals''), November 17, 1986 and February 15, 1990.

g. The TPQ was recalculated (September 8, 2003) since it was mistakenly calculated in the April 22, 1987 final rule under the wrong assumption that this chemical is a reactive solid, when in fact it is a liquid. RQ for this chemical was adjusted on September 11, 2006.

APPENDIX 17

CWA HAZARDOUS SUBSTANCE LIST - 40 CFR 117.3

of this section), to a water identified in paragraphs (i)(1)(i) through (iii) of this section that is characterized by the presence of the physical indicators of a bed and banks and an ordinary high water mark. These physical indicators demonstrate there is volume, frequency, and duration of flow sufficient to create a bed and banks and an ordinary high water mark, and thus to qualify as a tributary. A tributary can be a natural, man-altered, or man-made water and includes waters such as rivers, streams, canals, and ditches not excluded under paragraph (i)(2) of this section. A water that otherwise qualifies as a tributary under this definition does not lose its status as a tributary if, for any length, there are one or more constructed breaks (such as bridges, culverts, pipes, or dams), or one or more natural breaks (such as wetlands along the run of a stream, debris piles, boulder fields, or a stream that flows underground) so long as a bed and banks and an ordinary high water mark can be identified upstream of the break. A water that otherwise qualifies as a tributary under this definition does not lose its status as a tributary if it contributes flow through a water of the United States that does not meet the definition of tributary or through a non-jurisdictional water to a water identified in paragraphs (i)(1)(i) through (iii) of this section.

(iv) *Wetlands*. The term *wetlands* means those areas that are inundated or saturated by surface or groundwater at a frequency and duration sufficient to support, and that under normal circumstances do support, a prevalence of vegetation typically adapted for life in saturated soil conditions. Wetlands generally include swamps, marshes, bogs, and similar areas.

(v) *Significant nexus*. The term *significant nexus* means that a water, including wetlands, either alone or in combination with other similarly situated waters in the region, significantly affects the chemical, physical, or biological integrity of a water identified in paragraphs (i)(1)(i) through (iii) of this section. The term ''in the region'' means the watershed that drains to the nearest water identified in paragraphs (i)(1)(i) through (iii) of this section. For an effect to be significant, it must be more than speculative or insubstantial. Waters are similarly situated when they function alike and are sufficiently close to function together in affecting downstream waters. For purposes of determining whether or not a water has a significant nexus, the water's effect on downstream (i)(1)(i) through (iii) waters shall be assessed by evaluating the aquatic functions identified in paragraphs (i)(3)(v)(A) through (I) of this section. A water has a significant nexus when any single function or combination of functions performed by the water, alone or together with similarly situated waters in the region, contributes significantly to the chemical, physical, or biological integrity of the nearest water identified in paragraphs (i)(1)(i) through (iii) of this section. Functions relevant to the significant nexus evaluation are the following:

(A) Sediment trapping,

(B) Nutrient recycling,

(C) Pollutant trapping, transformation, filtering, and transport,

(D) Retention and attenuation of flood waters,

(E) Runoff storage,

(F) Contribution of flow,

(G) Export of organic matter,

(H) Export of food resources, and

(I) Provision of life cycle dependent aquatic habitat (such as foraging, feeding, nesting, breeding, spawning, or use as a nursery area) for species located in a water identified in paragraphs (i)(1)(i) through (iii) of this section.

(vi) O*rdinary high water mark*. The term *ordinary high water mark* means that line on the shore established by the fluctuations of water and indicated by physical characteristics such as a clear, natural line impressed on the bank, shelving, changes in the character of soil, destruction of terrestrial vegetation, the presence of litter and debris, or other appropriate means that consider the characteristics of the surrounding areas.

(vii) *High tide line*. The term *high tide line* means the line of intersection of the land with the water's surface at the maximum height reached by a rising tide. The high tide line may be determined, in the absence of actual data, by a line of oil or scum along shore objects, a more or less continuous deposit of fine shell or debris on the foreshore or berm, other physical markings or characteristics, vegetation lines, tidal gages, or other suitable means that delineate the general height reached by a rising tide. The line encompasses spring high tides and other high tides that occur with periodic frequency but does not include storm surges in which there is a departure from the normal or predicted reach of the tide due to the piling up of water against a coast by strong winds such as those accompanying a hurricane or other intense storm.

§ 117.2 Abbreviations.

NPDES equals National Pollutant Discharge Elimination System. RQ equals reportable quantity.

§ 117.3 Determination of reportable quantities.

Each substance in Table 117.3 that is listed in Table 302.4, 40 CFR part 302, is assigned the reportable quantity listed in Table 302.4 for that substance.

TABLE 117.3—REPORTABLE QUANTITIES OF HAZARDOUS SUBSTANCES DESIGNATED PURSUANT TO SECTION 311 OF THE CLEAN WATER ACT

NOTE: The first number under the column headed ''RQ'' is the reportable quantity in pounds. The number in parentheses is the metric equivalent in kilograms. For convenience, the table contains a column headed ''Category'' which lists the code letters ''X'', ''A'', ''B'', ''C'', and ''D'' associated with reportable quantities of 1, 10, 100, 1000, and 5000 pounds, respectively.

TABLE 117.3—REPORTABLE QUANTITIES OF HAZARDOUS SUBSTANCES DESIGNATED PURSUANT TO SECTION 311 OF THE CLEAN WATER ACT

Material	Category	RQ in pounds (kilograms)
Acetaldehyde	C	1,000 (454)
Acetic acid	D	5,000 (2,270)
Acetic anhydride	D	5,000 (2,270)
Acetone cyanohydrin	A	10 (4.54)
Acetyl bromide	D	5,000 (2,270)
Acetyl chloride	D	5,000 (2,270)
Acrolein	X	1 (0.454)
Acrylonitrile	B	100 (45.4)
Adipic acid	D	5,000 (2,270)
Aldrin	X	1 (0.454)
Allyl alcohol	B	100 (45.4)
Allyl chloride	C	1,000 (454)
Aluminum sulfate	D	5,000 (2,270)
Ammonia	B	100 (45.4)
Ammonium acetate	D	5,000 (2,270)
Ammonium benzoate	D	5,000 (2,270)
Ammonium bicarbonate	D	5,000 (2,270)
Ammonium bichromate	A	10 (4.54)
Ammonium bifluoride	B	100 (45.4)
Ammonium bisulfite	D	5,000 (2,270)
Ammonium carbamate	D	5,000 (2,270)
Ammonium carbonate	D	5,000 (2,270)
Ammonium chloride	D	5,000 (2,270)
Ammonium chromate	A	10 (4.54)
Ammonium citrate dibasic	D	5,000 (2,270)
Ammonium fluoborate	D	5,000 (2,270)
Ammonium fluoride	B	100 (45.4)
Ammonium hydroxide	C	1,000 (454)
Ammonium oxalate	D	5,000 (2,270)
Ammonium silicofluoride	C	1,000 (454)
Ammonium sulfamate	D	5,000 (2,270)
Ammonium sulfide	B	100 (45.4)
Ammonium sulfite	D	5,000 (2,270)
Ammonium tartrate	D	5,000 (2,270)
Ammonium thiocyanate	D	5,000 (2,270)
Amyl acetate	D	5,000 (2,270)
Aniline	D	5,000 (2,270)
Antimony pentachloride	C	1,000 (454)
Antimony potassium tartrate	B	100 (45.4)
Antimony tribromide	C	1,000 (454)
Antimony trichloride	C	1,000 (454)
Antimony trifluoride	C	1,000 (454)
Antimony trioxide	C	1,000 (454)
Arsenic disulfide	X	1 (0.454)
Arsenic pentoxide	X	1 (0.454)
Arsenic trichloride	X	1 (0.454)
Arsenic trioxide	X	1 (0.454)
Arsenic trisulfide	X	1 (0.454)
Barium cyanide	A	10 (4.54)
Benzene	A	10 (4.54)
Benzoic acid	D	5,000 (2,270)
Benzonitrile	D	5,000 (2,270)
Benzoyl chloride	C	1,000 (454)
Benzyl chloride	B	100 (45.4)
Beryllium chloride	X	1 (0.454)
Beryllium fluoride	X	1 (0.454)
Beryllium nitrate	X	1 (0.454)
Butyl acetate	D	5,000 (2,270)
Butylamine	C	1,000 (454)
n-Butyl phthalate	A	10 (4.54)
Butyric acid	D	5,000 (2,270)
Cadmium acetate	A	10 (4.54)

TABLE 117.3—REPORTABLE QUANTITIES OF HAZARDOUS SUBSTANCES DESIGNATED PURSUANT TO SECTION 311 OF THE CLEAN WATER ACT—Continued

Material	Category	RQ in pounds (kilograms)
Cadmium bromide	A	10 (4.54)
Cadmium chloride	A	10 (4.54)
Calcium arsenate	X	1 (0.454)
Calcium arsenite	X	1 (0.454)
Calcium carbide	A	10 (4.54)
Calcium chromate	A	10 (4.54)
Calcium cyanide	A	10 (4.54)
Calcium dodecylbenzenesulfonate	C	1,000 (454)
Calcium hypochlorite	A	10 (4.54)
Captan	A	10 (4.54)
Carbaryl	B	100 (45.4)
Carbofuran	A	10 (4.54)
Carbon disulfide	B	100 (45.4)
Carbon tetrachloride	A	10 (4.54)
Chlordane	X	1 (0.454)
Chlorine	A	10 (4.54)
Chlorobenzene	B	100 (45.4)
Chloroform	A	10 (4.54)
Chlorosulfonic acid	C	1,000 (454)
Chlorpyrifos	X	1 (0.454)
Chromic acetate	C	1,000 (454)
Chromic acid	A	10 (4.54)
Chromic sulfate	C	1,000 (454)
Chromous chloride	C	1,000 (454)
Cobaltous bromide	C	1,000 (454)
Cobaltous formate	C	1,000 (454)
Cobaltous sulfamate	C	1,000 (454)
Coumaphos	A	10 (4.54)
Cresol	B	100 (45.4)
Crotonaldehyde	B	100 (45.4)
Cupric acetate	B	100 (45.4)
Cupric acetoarsenite	X	1 (0.454)
Cupric chloride	A	10 (4.54)
Cupric nitrate	B	100 (45.4)
Cupric oxalate	B	100 (45.4)
Cupric sulfate	A	10 (4.54)
Cupric sulfate, ammoniated	B	100 (45.4)
Cupric tartrate	B	100 (45.4)
Cyanogen chloride	A	10 (4.54)
Cyclohexane	C	1,000 (454)
2,4-D Acid	B	100 (45.4)
2,4-D Esters	B	100 (45.4)
DDT	X	1 (0.454)
Diazinon	X	1 (0.454)
Dicamba	C	1,000 (454)
Dichlobenil	B	100 (45.4)
Dichlone	X	1 (0.454)
Dichlorobenzene	B	100 (45.4)
Dichloropropane	C	1,000 (454)
Dichloropropene	B	100 (45.4)
Dichloropropene-Dichloropropane (mixture)	B	100 (45.4)
2,2-Dichloropropionic acid	D	5,000 (2,270)
Dichlorvos	A	10 (4.54)
Dicofol	A	10 (4.54)
Dieldrin	X	1 (0.454)
Diethylamine	B	100 (45.4)
Dimethylamine	C	1,000 (454)
Dinitrobenzene (mixed)	B	100 (45.4)
Dinitrophenol	A	10 (45.4)
Dinitrotoluene	A	10 (4.54)
Diquat	C	1,000 (454)
Disulfoton	X	1 (0.454)
Diuron	B	100 (45.4)
Dodecylbenzenesulfonic acid	C	1,000 (454)
Endosulfan	X	1 (0.454)
Endrin	X	1 (0.454)
Epichlorohydrin	B	100 (45.4)
Ethion	A	10 (4.54)
Ethylbenzene	C	1,000 (454)
Ethylenediamine	D	5,000 (2,270)
Ethylenediamine-tetraacetic acid (EDTA)	D	5,000 (2,270)

TABLE 117.3—REPORTABLE QUANTITIES OF HAZARDOUS SUBSTANCES DESIGNATED PURSUANT TO SECTION 311 OF THE CLEAN WATER ACT—Continued

Material	Category	RQ in pounds (kilograms)
Ethylene dibromide	X	1 (0.454)
Ethylene dichloride	B	100 (45.4)
Ferric ammonium citrate	C	1,000 (454)
Ferric ammonium oxalate	C	1,000 (454)
Ferric chloride	C	1,000 (454)
Ferric fluoride	B	100 (45.4)
Ferric nitrate	C	1,000 (454)
Ferric sulfate	C	1,000 (454)
Ferrous ammonium sulfate	C	1,000 (454)
Ferrous chloride	B	100 (45.4)
Ferrous sulfate	C	1,000 (454)
Formaldehyde	B	100 (45.4)
Formic acid	D	5,000 (2,270)
Fumaric acid	D	5,000 (2,270)
Furfural	D	5,000 (2,270)
Guthion	X	1 (0.454)
Heptachlor	X	1 (0.454)
Hexachlorocyclopentadiene	A	10 (4.54)
Hydrochloric acid	D	5,000 (2,270)
Hydrofluoric acid	B	100 (45.4)
Hydrogen cyanide	A	10 (4.54)
Hydrogen sulfide	B	100 (45.4)
Isoprene	B	100 (45.4)
Isopropanolamine dodecylbenzenesulfonate	C	1,000 (454)
Kepone	X	1 (0.454)
Lead acetate	A	10 (4.54)
Lead arsenate	X	1 (0.454)
Lead chloride	A	10 (4.54)
Lead fluoborate	A	10 (4.54)
Lead fluoride	A	10 (4.54)
Lead iodide	A	10 (4.54)
Lead nitrate	A	10 (4.54)
Lead stearate	A	10 (4.54)
Lead sulfate	A	10 (4.54)
Lead sulfide	A	10 (4.54)
Lead thiocyanate	A	10 (4.54)
Lindane	X	1 (0.454)
Lithium chromate	A	10 (4.54)
Malathion	B	100 (45.4)
Maleic acid	D	5,000 (2,270)
Maleic anhydride	D	5,000 (2,270)
Mercaptodimethur	A	10 (4.54)
Mercuric cyanide	X	1 (0.454)
Mercuric nitrate	A	10 (4.54)
Mercuric sulfate	A	10 (4.54)
Mercuric thiocyanate	A	10 (4.54)
Mercurous nitrate	A	10 (4.54)
Methoxychlor	X	1 (0.454)
Methyl mercaptan	B	100 (45.4)
Methyl methacrylate	C	1,000 (454)
Methyl parathion	B	100 (45.4)
Mevinphos	A	10 (4.54)
Mexacarbate	C	1,000 (454)
Monoethylamine	B	100 (45.4)
Monomethylamine	B	100 (45.4)
Naled	A	10 (4.54)
Naphthalene	B	100 (45.4)
Naphthenic acid	B	100 (45.4)
Nickel ammonium sulfate	B	100 (45.4)
Nickel chloride	B	100 (45.4)
Nickel hydroxide	A	10 (4.54)
Nickel nitrate	B	100 (45.4)
Nickel sulfate	B	100 (45.4)
Nitric acid	C	1,000 (454)
Nitrobenzene	C	1,000 (454)
Nitrogen dioxide	A	10 (4.54)
Nitrophenol (mixed)	B	100 (45.4)
Nitrotoluene	C	1,000 (454)
Paraformaldehyde	C	1,000 (454)
Parathion	A	10 (4.54)
Pentachlorophenol	A	10 (4.54)

TABLE 117.3—REPORTABLE QUANTITIES OF HAZARDOUS SUBSTANCES DESIGNATED PURSUANT TO SECTION 311 OF THE CLEAN WATER ACT—Continued

Material	Category	RQ in pounds (kilograms)
Phenol	C	1,000 (454)
Phosgene	A	10 (4.54)
Phosphoric acid	D	5,000 (2,270)
Phosphorus	X	1 (0.454)
Phosphorus oxychloride	C	1,000 (454)
Phosphorus pentasulfide	B	100 (45.4)
Phosphorus trichloride	C	1,000 (454)
Polychlorinated biphenyls	X	1 (0.454)
Potassium arsenate	X	1 (0.454)
Potassium arsenite	X	1 (0.454)
Potassium bichromate	A	10 (4.54)
Potassium chromate	A	10 (4.54)
Potassium cyanide	A	10 (4.54)
Potassium hydroxide	C	1,000 (454)
Potassium permanganate	B	100 (45.4)
Propargite	A	10 (4.54)
Propionic acid	D	5,000 (2,270)
Propionic anhydride	D	5,000 (2,270)
Propylene oxide	B	100 (45.4)
Pyrethrins	X	1 (0.454)
Quinoline	D	5,000 (2,270)
Resorcinol	D	5,000 (2,270)
Selenium oxide	A	10 (4.54)
Silver nitrate	X	1 (0.454)
Sodium	A	10 (4.54)
Sodium arsenate	X	1 (0.454)
Sodium arsenite	X	1 (0.454)
Sodium bichromate	A	10 (4.54)
Sodium bifluoride	B	100 (45.4)
Sodium bisulfite	D	5,000 (2,270)
Sodium chromate	A	10 (4.54)
Sodium cyanide	A	10 (4.54)
Sodium dodecylbenzenesulfonate	C	1,000 (454)
Sodium fluoride	C	1,000 (454)
Sodium hydrosulfide	D	5,000 (2,270)
Sodium hydroxide	C	1,000 (454)
Sodium hypochlorite	B	100 (45.4)
Sodium methylate	C	1,000 (454)
Sodium nitrite	B	100 (45.4)
Sodium phosphate, dibasic	D	5,000 (2,270)
Sodium phosphate, tribasic	D	5,000 (2,270)
Sodium selenite	B	100 (45.4)
Strontium chromate	A	10 (4.54)
Strychnine	A	10 (4.54)
Styrene	C	1,000 (454)
Sulfuric acid	C	1,000 (454)
Sulfur monochloride	C	1,000 (454)
2,4,5-T acid	C	1,000 (454)
2,4,5-T amines	D	5,000 (2,270)
2,4,5-T esters	C	1,000 (454)
2,4,5-T salts	C	1,000 (454)
TDE	X	1 (0.454)
2,4,5-TP acid	B	100 (45.4)
2,4,5-TP acid esters	B	100 (45.4)
Tetraethyl lead	A	10 (4.54)
Tetraethyl pyrophosphate	A	10 (4.54)
Thallium sulfate	B	100 (45.4)
Toluene	C	1,000 (454)
Toxaphene	X	1 (0.454)
Trichlorfon	B	100 (45.4)
Trichloroethylene	B	100 (45.4)
Trichlorophenol	A	10 (4.54)
Triethanolamine dodecylbenzenesulfonate	C	1,000 (454)
Triethylamine	D	5,000 (2,270)
Trimethylamine	B	100 (45.4)
Uranyl acetate	B	100 (45.4)
Uranyl nitrate	B	100 (45.4)
Vanadium pentoxide	C	1,000 (454)
Vanadyl sulfate	C	1,000 (454)
Vinyl acetate	D	5,000 (2,270)
Vinylidene chloride	B	100 (45.4)

TABLE 117.3—REPORTABLE QUANTITIES OF HAZARDOUS SUBSTANCES DESIGNATED PURSUANT TO SECTION 311 OF THE CLEAN WATER ACT—Continued

Material	Category	RQ in pounds (kilograms)
Xylene (mixed)	B	100 (45.4)
Xylenol	C	1,000 (454)
Zinc acetate	C	1,000 (454)
Zinc ammonium chloride	C	1,000 (454)
Zinc borate	C	1,000 (454)
Zinc bromide	C	1,000 (454)
Zinc carbonate	C	1,000 (454)
Zinc chloride	C	1,000 (454)
Zinc cyanide	A	10 (4.54)
Zinc fluoride	C	1,000 (454)
Zinc formate	C	1,000 (454)
Zinc hydrosulfite	C	1,000 (454)
Zinc nitrate	C	1,000 (454)
Zinc phenolsulfonate	D	5,000 (2,270)
Zinc phosphide	B	100 (45.4)
Zinc silicofluoride	D	5,000 (2,270)
Zinc sulfate	C	1,000 (454)
Zirconium nitrate	D	5,000 (2,270)
Zirconium potassium fluoride	C	1,000 (454)
Zirconium sulfate	D	5,000 (2,270)
Zirconium tetrachloride	D	5,000 (2,270)

[50 FR 13513, Apr. 4, 1985, as amended at 51 FR 34547, Sept. 29, 1986; 54 FR 33482, Aug. 14, 1989; 58 FR 35327, June 30, 1993; 60 FR 30937, June 12, 1995]

Subpart B—Applicability

§ 117.11 General applicability.

This regulation sets forth a determination of the reportable quantity for each substance designated as hazardous in 40 CFR part 116. The regulation applies to quantities of designated substances equal to or greater than the reportable quantities, when discharged into or upon the navigable waters of the United States, adjoining shorelines, into or upon the contiguous zone, or beyond the contiguous zone as provided in section 311(b)(3) of the Act, except to the extent that the owner or operator can show such that discharges are made:

(a) In compliance with a permit issued under the Marine Protection, Research and Sanctuaries Act of 1972 (33 U.S.C. 1401 *et seq.*);

(b) In compliance with approved water treatment plant operations as specified by local or State regulations pertaining to safe drinking water;

(c) Pursuant to the label directions for application of a pesticide product registered under section 3 or section 24 of the Federal Insecticide, Fungicide, and Rodenticide Act (FIFRA), as amended (7 U.S.C. 136 *et seq.*), or pursuant to the terms and conditions of an experimental use permit issued under section 5 of FIFRA, or pursuant to an exemption granted under section 18 of FIFRA;

(d) In compliance with the regulations issued under section 3004 or with permit conditions issued pursuant to section 3005 of the Resource Conservation and Recovery Act (90 Stat. 2795; 42 U.S.C. 6901);

(e) In compliance with instructions of the On-Scene Coordinator pursuant to 40 CFR part 1510 (the National Oil and Hazardous Substances Pollution Plan) or 33 CFR 153.10(e) (Pollution by Oil and Hazardous Substances) or in accordance with applicable removal regulations as required by section 311(j)(1)(A);

(f) In compliance with a permit issued under § 165.7 of Title 14 of the State of California Administrative Code;

(g) From a properly functioning inert gas system when used to provide inert gas to the cargo tanks of a vessel;

(h) From a permitted source and are excluded by § 117.12 of this regulation;

(i) To a POTW and are specifically excluded or reserved in § 117.13; or

(j) In compliance with a permit issued under section 404(a) of the Clean Water Act or when the discharges are

APPENDIX 18

EPA LIST OF LISTS

United States
Environmental Protection
Agency

Office of Solid Waste
and
Emergency Response

EPA 550-B-15-001
March 2015
www.epa.gov/emergencies

LIST OF LISTS

Consolidated List of Chemicals Subject to the Emergency Planning and Community Right-To-Know Act (EPCRA), Comprehensive Environmental Response, Compensation and Liability Act (CERCLA) and Section 112(r) of the Clean Air Act

- EPCRA Section 302 Extremely Hazardous Substances
- CERCLA Hazardous Substances
- EPCRA Section 313 Toxic Chemicals
- CAA 112(r) Regulated Chemicals for Accidental Release Prevention

TABLE OF CONTENTS

Page

Introduction i

List of Lists – Consolidated List of Chemicals (by CAS #) Subject to the Emergency Planning and Community Right-to-Know Act (EPCRA), Comprehensive Environmental Response, Compensation and Liability Act (CERCLA) and Section 112(r) of the Clean Air Act……..1

Appendix A: Alphabetical Listing of Consolidated List……A-1

Appendix B: Radionuclides Listed Under CERCLA…….B-1

Appendix C: RCRA Waste Streams and Unlisted Hazardous Wastes……...C-1

Appendix D: EPCRA Section 313, Toxic Release Inventory (TRI) Chemical Categories……D-1

Appendix E: CERCLA Hazardous Substances – Chemical Categories…….E-1

LIST OF LISTS

Consolidated List of Chemicals Subject to the Emergency Planning and Community Right-to-Know Act (EPCRA), Comprehensive Environmental Response, Compensation and Liability Act (CERCLA) and Section 112(r) of the Clean Air Act

This consolidated chemical list includes chemicals subject to reporting requirements under the Emergency Planning and Community Right-to-Know Act (EPCRA), also known as Title III of the Superfund Amendments and Reauthorization Act of 1986 (SARA), the Comprehensive Environmental Response, Compensation and Liability Act (CERCLA) and section 112(r) of the Clean Air Act (CAA). This consolidated list does not include all hazardous chemicals subject to the reporting requirements in EPCRA sections 311 and 312, for which material safety data sheets (MSDS) must be developed under the Hazard Communication Standard (29 CFR1910.1200). These hazardous chemicals are identified by broad criteria, rather than by enumeration. There are over 500,000 products that satisfy the criteria. See 40 CFR Part 370 for more information.
This consolidated list has been prepared to help firms handling chemicals determine whether they need to submit reports under sections 302 and 313 of EPCRA and determine if releases of chemicals are reportable under section 102 and 103 of CERCLA and section 304 of EPCRA. It will also help firms determine whether they will be subject to accident prevention regulations under CAA section 112(r). Separate lists are also provided of Resource Conservation and Recovery Act (RCRA) waste streams and unlisted hazardous wastes, of radionuclides reportable under CERCLA and of definitions or explanation of chemical categories listed under EPCRA section 313 and CERCLA. These lists should be used as a reference tool, not as a definitive source of compliance information. Compliance information for EPCRA is published in the Code of Federal Regulations (CFR), 40 CFR parts 355, 370, and 372. Compliance information for CERCLA is published in 40 CFR part 302 and for CAA section 112(r) is published in 40 CFR part 68.

The chemicals on the consolidated list are ordered both by the Chemical Abstracts Service (CAS) registry number and alphabetically. Categories of chemicals which generally do not have CAS registry numbers, but which are cited under CERCLA, have Not Applicable (N.A.) listed in place of the CAS number. If the category of chemical is an EPCRA section 313, then the section 313 category code is also included in the CAS number column.

The lists include chemicals referenced under five federal statutory provisions, discussed below. More than one chemical name may be listed for one CAS number because the same chemical may appear on different lists under different names. For example, for CAS number 8001-35-2, the names toxaphene (from the section 313 list), camphechlor (from the section 302 list), and camphene, octachloro-(from the CERCLA list) all appear on this consolidated list. The chemical names on the consolidated lists generally are those names used in the regulatory programs developed under EPCRA, CERCLA, and CAA section 112(r), but each chemical may have other synonyms that do not appear on these lists.

(1) **EPCRA Section 302 Extremely Hazardous Substances (EHSs)**

The presence of Extremely Hazardous Substances (EHSs) in quantities at or above the Threshold Planning Quantity (TPQ) requires certain emergency planning activities to be conducted. The EHSs and their TPQs are listed in 40 CFR part 355, Appendices A and B. For section 302 EHSs, Local Emergency Planning Committees (LEPCs) must develop emergency response plans and facility owner or operator must notify the State Emergency Response Commission (SERC) or Tribal Emergency Response Commission (TERC) and their LEPC if a chemical is present at the facility or above the EHS's TPQ. Additionally, if the TPQ is equaled or exceeded, facilities with a listed EHS are subject to the reporting requirements of EPCRA section 311 (provide material safety data sheet or a list of covered chemicals to the SERC or TERC, LEPC, and local fire department) and section 312 (submit inventory form -Tier I or Tier II). The minimum threshold for section 311-312 reporting for EHS substances is 500 pounds or the TPQ, whichever is less.

TPQ. The consolidated list presents the TPQ (in pounds) for section 302 chemicals in the column following the CAS number. For chemicals that are solids, there are two TPQs given (e.g., 500/10,000). In these cases, the lower quantity applies for solids in powder form with particle size less than 100 microns, or if the substance is in solution or in molten form. Otherwise, the 10,000 pound TPQ applies. If a solid EHS is in molten form, the facility must multiply the amount of EHS on-site by 0.3 before comparing to the lower listed TPQ. If a solid EHS is in solution form, the facility must multiply amount EHS on-site by 0.2 before comparing to the lower listed TPQ. The reducing factors of 0.3 for molten solids and 0.2 for solids in solution are not to be used for the 12 solid reactive chemicals are noted by footnote "a" in Appendix A and B in 40 CFR part 355. These twelve chemicals are not listed with two TPQs and higher threshold quantity of 10,000 pounds; they only have one TPQ.

EHS RQ. Releases of reportable quantities (RQ) of EHSs are subject to state and local reporting under section 304 of EPCRA. EPA has adjusted RQs for EHSs without CERCLA RQs to levels equal to their TPQs. The EHS RQ column lists these adjusted RQs for EHSs not listed under CERCLA and the CERCLA RQs for those EHSs that are CERCLA hazardous substances (see the next section for a discussion of CERCLA RQs).

Note that ammonium hydroxide is not covered under section 302; the EHS RQ is based on anhydrous ammonia. Ammonium hydroxide (which is also known as aqueous ammonia) is subject to CERCLA, with its own RQ.

(2) **CERCLA Hazardous Substances**

Releases of CERCLA hazardous substances, in quantities equal to or greater than their reportable quantity (RQ), are subject to reporting to the National Response Center under CERCLA. Notification requirements for these releases are found in 40 CFR 302. Such releases are also subject to state and local reporting under section 304 of EPCRA. CERCLA hazardous substances, and their reportable quantities, are listed in 40 CFR part 302, Table 302.4. Radionuclides listed under CERCLA are provided in a separate list in Appendix B of this document, with RQs in Curies. Chemical categories under CERCLA (including metal

compound categories), which have N.A. listed for the CAS Number in the consolidated table, are also listed in Appendix E of this document with further explanation of each chemical category, where information was available.

RQ. The CERCLA RQ column in the consolidated list shows the RQs (in pounds) for chemicals that are CERCLA hazardous substances.

Metals. For metals listed under CERCLA (antimony, arsenic, beryllium, cadmium, chromium, copper, lead, nickel, selenium, silver, thallium, and zinc), no reporting of releases of the solid form is required if the mean diameter of the pieces of the solid metal released is greater than 100 micrometers (0.004 inches) (Ref: Footnote after Table 302.4 in 40 CFR 302.4). The RQs shown on the consolidated list apply to smaller particles.

Note that the consolidated list does not include all CERCLA regulatory synonyms. See 40 CFR part 302, Table 302.4 for a complete list.

Sulfur monochloride. (formula S_2Cl_2) is listed with an incorrect CAS number of 12771-08-3, which is found on the CERCLA Hazardous Substances list. The correct CAS number should be 10025-67-9, however, the List of Lists will still include the CAS number of 12771-08-3 because it has not been changed on the CERCLA list. According to the Chemical Abstract Services which assigns CAS numbers, the correct CAS number for sulfur monochloride is 10025-67-9, which is now included on the List of Lists with an explanatory footnote.

CAS number 12771-08-3 is assigned to the substance sulfur chloride (formula SCl^-) which was listed as a synonym for sulfur monochloride when EPA finalized the Clean Water Act Designation of Hazardous Substances rule (43 FR 10474, March 13, 1978). The CAS number 10025-67-9 is used for sulfur monochloride on EPA's TSCA Inventory and EPA's Substance Registry Services lists.

(3) **<u>CAA Section 112(r) List of Substances for Accidental Release Prevention</u>**

Under the accident prevention provisions of section 112(r) of the CAA, EPA developed a list of 77 toxic substances and 63 flammable substances. Threshold quantities (TQs) were established for these substances. The list and TQs identify processes subject to accident prevention regulations. The list of substances and TQs and the requirements for risk management programs for accidental release prevention are found in 40 CFR part 68. This consolidated list includes both the common name for each listed chemical under section 112(r) and the chemical name, if different from the common name, as separate listings.

The CAA section 112(r) list includes several substances in solution that are covered only in concentrations above a specified level. These substances include ammonia (concentration 20% or greater) (CAS number 7664-41-7); hydrochloric acid (37% or greater) (7647-01-0); hydrogen fluoride/hydrofluoric acid (50% or greater) (7664-39-3); and nitric acid (80% or greater) (7697-37-2). Hydrogen chloride (anhydrous) and ammonia (anhydrous) are listed, in addition to the solutions of these substances, with different TQs. Only the anhydrous form of sulfur dioxide

(7446-09-5) is covered. These substances are presented on the consolidated list with the concentration limit or specified form (e.g., anhydrous), as they are listed under CAA section 112(r). Flammable fuels used as a fuel or held for sale as a fuel at a retail facility are not subject to the rule.

TQ. The CAA section 112(r) TQ column in the consolidated list shows the TQs (in pounds) for chemicals listed for accidental release prevention. The TQ applies to the quantity of substance in a process, not at the facility as a whole.

(4) **EPCRA Section 313 Toxic Chemicals (a.k.a Toxics Release Inventory (TRI) Chemicals)**

Emissions, transfers, and waste management data for chemicals listed under section 313 must be reported annually as part of the community right-to-know provisions of EPCRA (40 CFR part 372). These reports are also known as Toxics Release Inventory (TRI) reports.

Section 313. The notation "313" in the column for section 313 indicates that the chemical is subject to reporting under section 313 and section 6607 of the Pollution Prevention Act under the name listed. In cases where a chemical is listed under section 313 with a second name in parentheses or brackets, the second name is included on this consolidated list with an "X" in the section 313 column. An "X" in this column also may indicate that the same chemical with the same CAS number appears on another list with a different chemical name. The "X" listed with the chemical name "Ammonia (anhydrous)" and "Ammonia (concentration of 20% or greater)" does not mean that the section 313 reporting for these substances are limited to those forms, but it does include them.

Diisocyanates, Dioxins and Dioxin-like Compounds, and PACs. In the November 30, 1994, expansion of the section 313 list, 20 specific chemicals were added as members of the diisocyanate category, and 19 specific chemicals were added as members of the polycyclic aromatic compounds (PAC) category. The PAC category was expanded to 25 total chemicals by additions made in October 1999 and November 2010. In October 1999, EPA added a category of dioxin and dioxin-like compounds that includes 17 specific chemicals. These chemicals are included in the CAS order listing on this consolidated list, although chemicals belonging to these categories are reportable under section 313 by category, rather than by individual chemical name. The symbol "#" following the "313" notation in the section 313 column identifies diisocyanates, the symbol "!" identifies the dioxin and dioxin-like compounds, and the symbol "+" identifies PACs, as noted in the Summary of Codes.

Ammonium Salts. The EPCRA section 313 listing for ammonia includes the following qualifier "includes anhydrous ammonia and aqueous ammonia from water dissociable ammonium salts and other sources; 10 percent of total aqueous ammonia is reportable under this listing." The qualifier for ammonia means that anhydrous forms of ammonia are 100% reportable and aqueous forms are limited to 10% of total aqueous ammonia. Therefore, when determining threshold and releases and other waste management quantities all anhydrous ammonia is included but only 10% of total aqueous ammonia is included. Any evaporation of

ammonia from aqueous ammonia solutions is considered anhydrous ammonia and should be included in threshold determinations and release and other waste management calculations.

In this document ammonium salts are not specifically identified as being reportable EPCRA section 313 chemicals. However, water dissociable ammonia salts, such as ammonium chloride, are reportable if they are placed in water. When ammonium salts are placed in water, reportable aqueous ammonia is manufactured. As indicated in the ammonia qualifier, all aqueous ammonia solutions from water dissociable ammonium salts are covered by the ammonia listing. For example, ammonium chloride is a water-dissociable ammonium salt and reportable aqueous ammonia will be manufactured when it is placed in water.

Unlike other ammonium salts, ammonium hydroxide is specifically identified as being a reportable EPCRA section 313 chemical. This is because the chemical ammonium hydroxide (NH4OH) is a misnomer. It is a common name used to describe a solution of ammonia in water (i.e., aqueous ammonia), typically a concentrated solution of 28 to 30 percent ammonia. EPA has consistently responded to questions regarding the reportability of these purported ammonium hydroxide solutions under the EPCRA section 313 ammonia listing by stating that these are 28 to 30 percent solutions of ammonia in water and that the solutions are reportable under the EPCRA section 313 ammonia listing. For a more detailed discussion, see page 34175 of the Federal Register final rule of June 30, 1995 (60 FR 34172). (See also EPA's EPCRA section 313, *Guidance for Reporting Aqueous Ammonia*, EPA 745-R00-005, http://www2.epa.gov/toxics-release-inventory-tri-program/guidance-aqueous-ammonia

Stayed TRI Chemicals. There are two EPRCA section 313 chemicals that are listed in the CFR but for which the Agency has issued an administrative stay that excludes them from reporting until the stays are lifted. These chemicals, identified by "313s" in the Sec. 313 table column, are methyl mercaptan (CAS number 74-93-1), and 2, 2-dibromo-3nitrilopropionamide (CAS number 10222-01-2). Check the TRI website http://www2.epa.gov/toxics-release-inventory-tri-program/tri-listed-chemicals for updated regulatory information. On October 11, 2011, EPA reinstated the TRI reporting requirements for hydrogen sulfide (CAS number 7783-06-4). This action is effective for the 2012 TRI reporting year, with the first 2012 TRI reports due from facilities by July 1, 2013. For more information, see http://www2.epa.gov/toxics-release-inventory-tri-program/hydrogen-sulfide-lifting-administrative-stay

New TRI Chemical, o-Nitrotoluene. On November 7, 2013, the chemical o-nitrotoluene (CAS number 88-72-2) to the TRI list (78 FR 66848). The action is effective for the 2014 TRI reporting year with the first reports due from facilities by July 1, 2015. For more information, see http://www2.epa.gov/toxics-release-inventory-tri-program/addition-ortho-nitrotoluene-final-rule

New TRI Category, Nonylphenols. On September 20, 2014, the category of nonylphenol (Category code N530) was added to the TRI chemical list (79 FR 58686). The action is effective for the 2015 TRI reporting year with the first reports due from facilities by July 1, 2016. For more information, see http://www2.epa.gov/toxics-release-inventory-tri-program/addition-nonylphenol-category-final-rule. The nonylphenol category covers six specific chemicals identified by chemical name and CAS number. These chemicals are included in the CAS order listing on this consolidated list,

although chemicals belonging to these categories are reportable under section 313 by category, rather than by individual chemical name. The symbol "$" following the "313" notation in the section 313 column identifies nonylphenols, as noted in the Summary of Codes.

TRI Reporting Thresholds. Reporting under EPCRA section 313 is triggered by the quantity of a chemical that is manufactured, processed, or otherwise used during the calendar year. For most TRI chemicals, the thresholds are 25,000 pounds manufactured or processed or 10,000 pound otherwise used. Sixteen TRI chemicals and four TRI chemical categories that meet the criteria for persistence and bioaccumulation have lower thresholds, such as 10 or 100 pounds and 0.1 grams. These 20 chemical listings and their reporting thresholds can be found at http://www2.epa.gov/toxics-release-inventory-tri-program/persistent-bioaccumulative-toxic-pbt-chemicals-covered-tri

(5) **Chemical Categories**

The CERCLA and EPCRA section 313 lists include a number of chemical categories as well as specific chemicals. Categories appear on this consolidated list at the beginning of the CAS number order listing. The specific chemicals or substances that are included in the CERCLA category Radionuclides can be found in Appendix B. Appendix D contains explanations and definitions for the EPCRA section 313 (TRI) chemical categories. For the CERCLA listed categories reported with CAS number of N.A., Appendix E contains information available on the CERCLA chemical categories from their original statutory and regulatory sources.

Specific chemicals listed as members of the diisocyanates, dioxin and dioxin-like compounds, nonylphenol, and PAC categories under EPCRA section 313 are included in the list of specific chemicals by CAS number, not in the category listing.

EPA has attempted to identify those chemicals on the consolidated list that are clearly reportable under one or more of the EPCRA section 313 (TRI) chemical categories. For example, mercuric acetate (CAS number 1600-27-7), listed under section 302, is not specifically listed under section 313, but is reportable under the section 313 "Mercury Compounds" category (no CAS number). Listed chemicals that have been identified as being reportable under one or more EPCRA section 313 categories are identified by "313c" in the Sec. 313 table column.

The chemicals on the consolidated list have not been systematically evaluated to determine whether they fall into any of the CERCLA listed categories. Some chemicals not specifically listed under CERCLA may be subject to CERCLA reporting as part of a category. For example, strychnine sulfate (CAS number 60-41-3), listed under EPCRA section 302, is not individually listed on the CERCLA list, but is subject to CERCLA reporting under the listing for strychnine and salts (CAS number 57-24-9), with an RQ of 10 pounds. Similarly, nicotine sulfate (CAS number 65-30-5) is subject to CERCLA reporting under the listing for nicotine and salts (CAS number 54-11-5, RQ 100 pounds), and warfarin sodium (CAS number 129-06-6) is subject to CERCLA reporting under the listing for warfarin and salts, concentration >0.3% (CAS number 81-81-2, RQ 100 pounds).

Note that some CERCLA listings, although they include CAS numbers, are for general categories and are not restricted to the specific CAS number (e.g., warfarin and salts). The CERCLA list also includes a number of generic categories that have not been assigned RQs; chemicals falling into these categories are considered CERCLA hazardous substances, but they are not required to be reported under CERCLA unless otherwise listed under CERCLA with an RQ.

(6) **RCRA Hazardous Wastes**

The consolidated list includes specific chemicals from the RCRA P and U lists only (40 CFR 261.33). This listing is provided as an indicator that companies may already have data on a specific chemical that may be useful for EPCRA reporting. It is not intended to be a comprehensive list of RCRA P and U chemicals. RCRA hazardous wastes consisting of waste streams on the F and K lists, and wastes exhibiting the characteristics of ignitability, corrosivity, reactivity, and toxicity, are provided in Appendix C in this document. This list also includes K181 hazardous waste with a statutory one-pound RQ (indicated by an asterisk "*" following the RQ. The descriptions of the F and K waste streams have been abbreviated; see 40 CFR part 302, Table 302.4, or 40 CFR part 261 for complete descriptions.

RCRA Code. The letter-and-digit code in the RCRA Code column is the chemical's RCRA hazardous waste code.

Summary of Codes

Codes in Section 313 column

+	Member of EPCRA Section 313 PAC category.
#	Member of EPCRA Section 313 diisocyanate category.
c	Although not listed by name and CAS number, this chemical is reportable under one or more of the EPCRA section 313 chemical categories.
s	Indicates that this chemical is currently under an administrative stay of the EPCRA section 313 reporting requirements, therefore, no Toxics Release Inventory reports are required until the stay is removed.
!	Member of the EPCRA section 313 dioxin and dioxin-like compounds category.
X	Indicates that this is a second name for an EPCRA section 313 chemical already included on this consolidated list. May also indicate that the same chemical with the same CAS number appears on another list with a different chemical name.
$	Member of the EPCRA section 313 nonylphenol category.

Codes in CERCLA RQ column

*	The Agency may adjust the statutory RQ for this RCRA hazardous substance (K181 waste) in a future rulemaking; until then the statutory one-pound RQ applies.
PMN	This EHS chemical was identified from a Premanufacture Review Notice (PMN) submitted to EPA. The submitter has claimed certain information on the submission to be confidential, including specific chemical identity.
&	Indicates that no RQ is assigned to this generic or broad class, although the class is a CERCLA hazardous substance. See 50 Federal Register 13456 (April 4, 1985).
@	Releases in amounts less than 1,000 pounds per 24 hours of nitrogen oxide or nitrogen dioxide to the air that are the result of combustion and combustion related activities are exempt from the notification requirements of EPCRA section 304 and CERCLA.

LIST OF LISTS

CONSOLIDATED LIST OF CHEMICALS (BY CAS NUMBER) SUBJECT TO EPCRA, CERCLA AND CAA SECTION 112(r)

NAME	CAS/313 Category Codes	Section 302 (EHS) TPQ	Section 304 EHS RQ	CERCLA RQ	Section 313	RCRA CODE	CAA 112(r) TQ
Chlordane (Technical Mixture and Metabolites)	N.A.			&			
Chlorinated Benzenes	N.A.			&			
Chlorinated Ethanes	N.A.			&			
Chlorinated Naphthalene	N.A.			&			
Chloroalkyl Ethers	N.A.			&			
Coke Oven Emissions	N.A.			1			
Creosote	N.A.			1		U051	
Cyanides (soluble salts and complexes), not otherwise specified	N.A.			10	313c	P030	
DDT and Metabolites	N.A.			&			
Dichlorobenzidine	N.A.			&			
Diphenylhydrazine	N.A.			&			
Endosulfan and Metabolites	N.A.			&			
Endrin and Metabolites	N.A.			&			
Fine mineral fibers	N.A.			&			
Haloethers	N.A.			&			
Halomethanes	N.A.			&			
Heptachlor and Metabolites	N.A.			&			
Nitrophenols	N.A.			&			
Nitrosamines	N.A.			&			
Phthalate Esters	N.A.			&			
Polycyclic organic matter	N.A.			&			
Polynuclear Aromatic Hydrocarbons	N.A.			&			
Antimony Compounds	N010			&	313		
Arsenic Compounds	N020			&	313		
Barium Compounds	N040				313		
Beryllium Compounds	N050			&	313		
Cadmium Compounds	N078			&	313		
Chlorinated Phenols	N084			&	313		
Chlorophenols	N084			&	313		
Chromium Compounds	N090			&	313		
Cobalt Compounds	N096			&	313		
Copper Compounds	N100			&	313		
Cyanide Compounds	N106			&	313		
Diisocyanates (includes only 20 chemicals)	N120				313		
Dioxin and dioxin-like compounds (includes only 17 chemicals)	N150				313		
Ethylenebisdithiocarbamic acid, salts and esters	N171				313		
Glycol Ethers	N230			&	313		
Lead Compounds	N420			&	313		
Manganese Compounds	N450			&	313		

NAME	CAS/313 Category Codes	Section 302 (EHS) TPQ	Section 304 EHS RQ	CERCLA RQ	Section 313	RCRA CODE	CAA 112(r) TQ
Mercury Compounds	N458			&	313		
Nickel Compounds	N495			&	313		
Nicotine and salts	N503				313		
Nitrate compounds (water dissociable)	N511				313		
Nonylphenol (includes only 6 chemicals)	N530				313		
Polybrominated Biphenyls (PBBs)	N575				313		
Polychlorinated alkanes (C10 to C13)	N583				313		
Polycyclic aromatic compounds (includes only 23 chemicals)	N590				313		
Selenium Compounds	N725			&	313		
Silver Compounds	N740			&	313		
Strychnine and salts	N746				313		
Thallium Compounds	N760			&	313		
Vanadium Compounds	N770				313		
Warfarin and salts	N874				313		
Zinc Compounds	N982			&	313		
Organorhodium Complex (PMN-82-147)	0	10/10,000	10	PMN			
Formaldehyde	50-00-0	500	100	100	313	U122	15,000
Formaldehyde (solution)	50-00-0	500	100	100	X	U122	15,000
Mitomycin C	50-07-7	500/10,000	10	10		U010	
Ergocalciferol	50-14-6	1,000/10,000	1,000				
Cyclophosphamide	50-18-0			10		U058	
DDT	50-29-3			1		U061	
Benzo[a]pyrene	50-32-8			1	313+	U022	
Reserpine	50-55-5			5,000		U200	
Piperonyl butoxide	51-03-6				313		
Fluorouracil	51-21-8	500/10,000	500		313		
5-Fluorouracil	51-21-8	500/10,000	500		X		
2,4-Dinitrophenol	51-28-5			10	313	P048	
Epinephrine	51-43-4			1,000		P042	
2-Chloro-N-(2-chloroethyl)-N-methylethanamine	51-75-2	10	10		X		
Mechlorethamine	51-75-2	10	10		X		
Nitrogen mustard	51-75-2	10	10		313		
Carbamic acid, ethyl ester	51-79-6			100	X	U238	
Ethyl carbamate	51-79-6			100	X	U238	
Urethane	51-79-6			100	313	U238	
Carbachol chloride	51-83-2	500/10,000	500				
Phosphonic acid, (2,2,2-trichloro-1-hydroxyethyl)-,dimethyl ester	52-68-6			100	X		
Trichlorfon	52-68-6			100	313		
Famphur	52-85-7			1,000	313	P097	
Dibenz[a,h]anthracene	53-70-3			1	313+	U063	
2-Acetylaminofluorene	53-96-3			1	313	U005	
Nicotine	54-11-5	100	100	100	313c	P075	
Nicotine and salts	54-11-5			100	313c	P075	
Pyridine, 3-(1-methyl-2-pyrrolidinyl)-	54-11-5	100	100	100		P075	

NAME	CAS/313 Category Codes	Section 302 (EHS) TPQ	Section 304 EHS RQ	CERCLA RQ	Section 313	RCRA CODE	CAA 112(r) TQ
,(S)-							
Aminopterin	54-62-6	500/10,000	500				
N-Nitrosodiethylamine	55-18-5			1	313	U174	
Benzamide	55-21-0				313		
O,O-Dimethyl O-(3-methyl-4-(methylthio) phenyl) ester, phosphorothioic acid	55-38-9				X		
Fenthion	55-38-9				313		
Nitroglycerin	55-63-0			10	313	P081	
Diisopropylfluorophosphate	55-91-4	100	100	100		P043	
Isofluorphate	55-91-4	100	100	100		P043	
Methylthiouracil	56-04-2			10		U164	
Carbon tetrachloride	56-23-5			10	313	U211	
Cantharidin	56-25-7	100/10,000	100				
Bis(tributyltin) oxide	56-35-9				313		
Parathion	56-38-2	100	10	10	313	P089	
Phosphorothioic acid, O,O-diethyl-O-(4-nitrophenyl) ester	56-38-2	100	10	10	X	P089	
3-Methylcholanthrene	56-49-5			10	313+	U157	
Diethylstilbestrol	56-53-1			1		U089	
Benz[a]anthracene	56-55-3			10	313+	U018	
Coumaphos	56-72-4	100/10,000	10	10			
1,1-Dimethyl hydrazine	57-14-7	1,000	10	10	313	U098	15,000
Dimethylhydrazine	57-14-7	1,000	10	10	X	U098	15,000
Hydrazine, 1,1-dimethyl-	57-14-7	1,000	10	10	X	U098	15,000
Strychnine	57-24-9	100/10,000	10	10	313c	P108	
Strychnine, and salts	57-24-9			10	313c	P108	
Pentobarbital sodium	57-33-0				313		
Phenytoin	57-41-0				313		
Physostigmine	57-47-6	100/10,000	100	100		P204	
beta-Propiolactone	57-57-8	500	10	10	313		
Physostigmine, salicylate (1:1)	57-64-7	100/10,000	100	100		P188	
Chlordane	57-74-9	1,000	1	1	313	U036	
4,7-Methanoindan, 1,2,3,4,5,6,7,8,8-octachloro-2,3,3a,4,7,7a-hexahydro-	57-74-9	1,000	1	1	X	U036	
7,12-Dimethylbenz[a]anthracene	57-97-6			1	313+	U094	
Phenoxarsine, 10,10'-oxydi-	58-36-6	500/10,000	500				
Cyclohexane, 1,2,3,4,5,6-hexachloro-,(1.alpha.,2.alpha.,3.beta.,4.alpha.,5.alpha.,6.beta.)-	58-89-9	1,000/10,000	1	1	X	U129	
Hexachlorocyclohexane (gamma isomer)	58-89-9	1,000/10,000	1	1	X	U129	
Lindane	58-89-9	1,000/10,000	1	1	313	U129	
2,3,4,6-Tetrachlorophenol	58-90-2			10	313c		
p-Chloro-m-cresol	59-50-7			5,000		U039	
Phenylhydrazine hydrochloride	59-88-1	1,000/10,000	1,000				
N-Nitrosomorpholine	59-89-2			1	313		
Ethylenediamine-tetraacetic acid (EDTA)	60-00-4			5,000			

NAME	CAS/313 Category Codes	Section 302 (EHS) TPQ	Section 304 EHS RQ	CERCLA RQ	Section 313	RCRA CODE	CAA 112(r) TQ
4-Aminoazobenzene	60-09-3				313		
4-Dimethylaminoazobenzene	60-11-7			10	313	U093	
Dimethylaminoazobenzene	60-11-7			10	X	U093	
Ethane, 1,1'-oxybis-	60-29-7			100		U117	10,000
Ethyl ether	60-29-7			100		U117	10,000
Hydrazine, methyl-	60-34-4	500	10	10	X	P068	15,000
Methyl hydrazine	60-34-4	500	10	10	313	P068	15,000
Acetamide	60-35-5			100	313		
Strychnine, sulfate	60-41-3	100/10,000	10	10	313c		
Dimethoate	60-51-5	500/10,000	10	10	313	P044	
Dieldrin	60-57-1			1		P037	
Amitrole	61-82-5			10	313	U011	
Phenylmercuric acetate	62-38-4	500/10,000	100	100	313c	P092	
Phenylmercury acetate	62-38-4	500/10,000	100	100	313c	P092	
Phenacetin	62-44-2			100		U187	
Ethyl methanesulfonate	62-50-0			1		U119	
Aniline	62-53-3	1,000	5,000	5,000	313	U012	
Thioacetamide	62-55-5			10	313	U218	
Thiourea	62-56-6			10	313	U219	
Dichlorvos	62-73-7	1,000	10	10	313		
Phosphoric acid, 2-dichloroethenyl dimethyl ester	62-73-7	1,000	10	10	X		
Fluoroacetic acid, sodium salt	62-74-8	10/10,000	10	10	X	P058	
Sodium fluoroacetate	62-74-8	10/10,000	10	10	313	P058	
Methanamine, N-methyl-N-nitroso-	62-75-9	1,000	10	10	X	P082	
N-Nitrosodimethylamine	62-75-9	1,000	10	10	313	P082	
Nitrosodimethylamine	62-75-9	1,000	10	10	X	P082	
Carbaryl	63-25-2			100	313	U279	
1-Naphthalenol, methylcarbamate	63-25-2			100	X	U279	
Phenol, 3-(1-methylethyl)-, methylcarbamate	64-00-6	500/10,000	10	10		P202	
Formic acid	64-18-6			5,000	313	U123	
Acetic acid	64-19-7			5,000			
Diethyl sulfate	64-67-5			10	313		
Tetracycline hydrochloride	64-75-5				313		
Colchicine	64-86-8	10/10,000	10				
Nicotine sulfate	65-30-5	100/10,000	100	100	313c		
Benzoic acid	65-85-0			5,000			
Uracil mustard	66-75-1			10		U237	
Cycloheximide	66-81-9	100/10,000	100				
Methanol	67-56-1			5,000	313	U154	
Isopropyl alcohol (mfg-strong acid process)	67-63-0				313		
Acetone	67-64-1			5,000		U002	
Chloroform	67-66-3	10,000	10	10	313	U044	20,000
Methane, trichloro-	67-66-3	10,000	10	10	X	U044	20,000
Hexachloroethane	67-72-1			100	313	U131	
Dimethylformamide	68-12-2			100	X		
N,N-Dimethylformamide	68-12-2			100	313		

NAME	CAS/313 Category Codes	Section 302 (EHS) TPQ	Section 304 EHS RQ	CERCLA RQ	Section 313	RCRA CODE	CAA 112(r) TQ
2,5-Cyclohexadiene-1,4-dione, 2,3,5-tris(1-aziridinyl)-	68-76-8				X		
Triaziquone	68-76-8				313		
Guanidine, N-methyl-N'-nitro-N-nitroso-	70-25-7			10		U163	
Hexachlorophene	70-30-4			100	313	U132	
Propiophenone, 4'-amino	70-69-9	100/10,000	100				
n-Butyl alcohol	71-36-3			5,000	313	U031	
Benzene	71-43-2			10	313	U019	
Methyl chloroform	71-55-6			1,000	X	U226	
1,1,1-Trichloroethane	71-55-6			1,000	313	U226	
Digitoxin	71-63-6	100/10,000	100				
Endrin	72-20-8	500/10,000	1	1		P051	
Benzene, 1,1'-(2,2,2-trichloroethylidene)bis [4-methoxy-	72-43-5			1	X	U247	
Methoxychlor	72-43-5			1	313	U247	
DDD	72-54-8			1		U060	
DDE	72-55-9			1			
Trypan blue	72-57-1			10	313	U236	
Methane	74-82-8						10,000
Bromomethane	74-83-9	1,000	1,000	1,000	313	U029	
Methyl bromide	74-83-9	1,000	1,000	1,000	X	U029	
Ethane	74-84-0						10,000
Ethene	74-85-1				X		10,000
Ethylene	74-85-1				313		10,000
Acetylene	74-86-2						10,000
Ethyne	74-86-2						10,000
Chloromethane	74-87-3			100	313	U045	10,000
Methane, chloro-	74-87-3			100	X	U045	10,000
Methyl chloride	74-87-3			100	X	U045	10,000
Methyl iodide	74-88-4			100	313	U138	
Methanamine	74-89-5			100			10,000
Monomethylamine	74-89-5			100			10,000
Hydrocyanic acid	74-90-8	100	10	10	X	P063	2,500
Hydrogen cyanide	74-90-8	100	10	10	313	P063	2,500
Methanethiol	74-93-1	500	100	100	X	U153	10,000
Methyl mercaptan	74-93-1	500	100	100	313s	U153	10,000
Thiomethanol	74-93-1	500	100	100	X	U153	10,000
Methylene bromide	74-95-3			1,000	313	U068	
Propane	74-98-6						10,000
1-Propyne	74-99-7						10,000
Propyne	74-99-7						10,000
Chloroethane	75-00-3			100	313		10,000
Ethane, chloro-	75-00-3			100	X		10,000
Ethyl chloride	75-00-3			100	X		10,000
Ethene, chloro-	75-01-4			1	X	U043	10,000
Vinyl chloride	75-01-4			1	313	U043	10,000
Ethene, fluoro-	75-02-5						10,000
Vinyl fluoride	75-02-5				313		10,000

NAME	CAS/313 Category Codes	Section 302 (EHS) TPQ	Section 304 EHS RQ	CERCLA RQ	Section 313	RCRA CODE	CAA 112(r) TQ
Ethanamine	75-04-7			100			10,000
Monoethylamine	75-04-7			100			10,000
Acetonitrile	75-05-8			5,000	313	U003	
Acetaldehyde	75-07-0			1,000	313	U001	10,000
Ethanethiol	75-08-1						10,000
Ethyl mercaptan	75-08-1						10,000
Dichloromethane	75-09-2			1,000	313	U080	
Methylene chloride	75-09-2			1,000	X	U080	
Carbon disulfide	75-15-0	10,000	100	100	313	P022	20,000
Cyclopropane	75-19-4						10,000
Calcium carbide	75-20-7			10			
Ethylene oxide	75-21-8	1,000	10	10	313	U115	10,000
Oxirane	75-21-8	1,000	10	10	X	U115	10,000
Bromoform	75-25-2			100	313	U225	
Tribromomethane	75-25-2			100	X	U225	
Dichlorobromomethane	75-27-4			5,000	313		
Isobutane	75-28-5						10,000
Propane, 2-methyl	75-28-5						10,000
Isopropyl chloride	75-29-6						10,000
Propane, 2-chloro-	75-29-6						10,000
Isopropylamine	75-31-0						10,000
2-Propanamine	75-31-0						10,000
1,1-Dichloroethane	75-34-3			1,000	X	U076	
Ethylidene Dichloride	75-34-3			1,000	313	U076	
1,1-Dichloroethylene	75-35-4			100	X	U078	10,000
Ethene, 1,1-dichloro-	75-35-4			100	X	U078	10,000
Vinylidene chloride	75-35-4			100	313	U078	10,000
Acetyl chloride	75-36-5			5,000		U006	
Difluoroethane	75-37-6						10,000
Ethane, 1,1-difluoro-	75-37-6						10,000
Ethene, 1,1-difluoro-	75-38-7						10,000
Vinylidene fluoride	75-38-7						10,000
Dichlorofluoromethane	75-43-4				313		
HCFC-21	75-43-4				X		
Carbonic dichloride	75-44-5	10	10	10	X	P095	500
Phosgene	75-44-5	10	10	10	313	P095	500
Chlorodifluoromethane	75-45-6				313		
HCFC-22	75-45-6				X		
Methanamine, N,N-dimethyl-	75-50-3			100			10,000
Trimethylamine	75-50-3			100			10,000
Nitromethane	75-52-5				313		
Aziridine, 2-methyl	75-55-8	10,000	1	1	X	P067	10,000
Propyleneimine	75-55-8	10,000	1	1	313	P067	10,000
Oxirane, methyl-	75-56-9	10,000	100	100	X		10,000
Propylene oxide	75-56-9	10,000	100	100	313		10,000
Cacodylic acid	75-60-5			1		U136	
Bromotrifluoromethane	75-63-8				313		
Halon 1301	75-63-8				X		

NAME	CAS/313 Category Codes	Section 302 (EHS) TPQ	Section 304 EHS RQ	CERCLA RQ	Section 313	RCRA CODE	CAA 112(r) TQ
tert-Butylamine	75-64-9			1,000			
tert-Butyl alcohol	75-65-0				313		
1-Chloro-1,1-difluoroethane	75-68-3				313		
HCFC-142b	75-68-3				X		
CFC-11	75-69-4			5,000	X	U121	
Trichlorofluoromethane	75-69-4			5,000	313	U121	
Trichloromonofluoromethane	75-69-4			5,000	X	U121	
CFC-12	75-71-8			5,000	X	U075	
Dichlorodifluoromethane	75-71-8			5,000	313	U075	
CFC-13	75-72-9				X		
Chlorotrifluoromethane	75-72-9				313		
Plumbane, tetramethyl-	75-74-1	100	100				10,000
Tetramethyllead	75-74-1	100	100		313c		10,000
Silane, tetramethyl-	75-76-3						10,000
Tetramethylsilane	75-76-3						10,000
Silane, chlorotrimethyl-	75-77-4	1,000	1,000				10,000
Trimethylchlorosilane	75-77-4	1,000	1,000				10,000
Dimethyldichlorosilane	75-78-5	500	500				5,000
Silane, dichlorodimethyl-	75-78-5	500	500				5,000
Methyltrichlorosilane	75-79-6	500	500				5,000
Silane, trichloromethyl-	75-79-6	500	500				5,000
Acetone cyanohydrin	75-86-5	1,000	10	10	X	P069	
2-Methyllactonitrile	75-86-5	1,000	10	10	313	P069	
Acetaldehyde, trichloro-	75-87-6			5,000		U034	
2-Chloro-1,1,1-trifluoroethane	75-88-7				313		
HCFC-133a	75-88-7				X		
2,2-Dichloropropionic acid	75-99-0			5,000			
Pentachloroethane	76-01-7			10	313	U184	
Trichloroacetyl chloride	76-02-8	500	500		313		
Chloropicrin	76-06-2				313		
Ethane, 1,1,2-trichloro-1,2,2,-trifluoro-	76-13-1				X		
Freon 113	76-13-1				313		
CFC-114	76-14-2				X		
Dichlorotetrafluoroethane	76-14-2				313		
CFC-115	76-15-3				X		
Monochloropentafluoroethane	76-15-3				313		
Heptachlor	76-44-8			1	313	P059	
1,4,5,6,7,8,8-Heptachloro-3a,4,7,7a-tetrahydro-4,7-methano-1H-indene	76-44-8			1	X	P059	
Triphenyltin hydroxide	76-87-9				313		
Phenolphthalein	77-09-8				313		
Hexachlorocyclopentadiene	77-47-4	100	10	10	313	U130	
Dicyclopentadiene	77-73-6				313		
Dimethyl sulfate	77-78-1	500	100	100	313	U103	
Tabun	77-81-6	10	10				
Tetraethyl lead	78-00-2	100	10	10	313c	P110	
Dioxathion	78-34-2	500	500				
DEF	78-48-8				X		

NAME	CAS/313 Category Codes	Section 302 (EHS) TPQ	Section 304 EHS RQ	CERCLA RQ	Section 313	RCRA CODE	CAA 112(r) TQ
S,S,S-Tributyltrithiophosphate	78-48-8				313		
Amiton	78-53-5	500	500				
Isophorone	78-59-1			5,000			
Oxetane, 3,3-bis(chloromethyl)-	78-71-7	500	500				
Butane, 2-methyl-	78-78-4						10,000
Isopentane	78-78-4						10,000
1,3-Butadiene, 2-methyl-	78-79-5			100			10,000
Isoprene	78-79-5			100	**313**		10,000
iso-Butylamine	78-81-9			1,000			
Isobutyronitrile	78-82-0	1,000	1,000				20,000
Propanenitrile, 2-methyl-	78-82-0	1,000	1,000				20,000
Isobutyl alcohol	78-83-1			5,000		U140	
Isobutyraldehyde	78-84-2				313		
1,2-Dichloropropane	78-87-5			1,000	313	U083	
Propane 1,2-dichloro-	78-87-5			1,000	X	U083	
2,3-Dichloropropene	78-88-6			100	313		
sec-Butyl alcohol	78-92-2				313		
Methyl ethyl ketone	78-93-3			5,000		U159	
Methyl vinyl ketone	78-94-4	10	10				
Lactonitrile	78-97-7	1,000	1,000				
1,1-Dichloropropane	78-99-9			1,000			
1,1,2-Trichloroethane	79-00-5			100	313	U227	
Trichloroethylene	79-01-6			100	313	U228	
Acrylamide	79-06-1	1,000/10,000	5,000	5,000	313	U007	
Propionic acid	79-09-4			5,000			
Acrylic acid	79-10-7			5,000	313	U008	
Chloroacetic acid	79-11-8	100/10,000	100	100	313		
Thiosemicarbazide	79-19-6	100/10,000	100	100	313	P116	
Ethaneperoxoic acid	79-21-0	500	500		X		10,000
Peracetic acid	79-21-0	500	500		313		10,000
Carbonochloridic acid, methylester	79-22-1	500	1,000	1,000	X	U156	5,000
Methyl chlorocarbonate	79-22-1	500	1,000	1,000	313	U156	5,000
Methyl chloroformate	79-22-1	500	1,000	1,000	X	U156	5,000
iso-Butyric acid	79-31-2			5,000			
1,1,2,2-Tetrachloroethane	79-34-5			100	313	U209	
Ethene, chlorotrifluoro-	79-38-9						10,000
Trifluorochloroethylene	79-38-9						10,000
Dimethylcarbamyl chloride	79-44-7			1	313	U097	
2-Nitropropane	79-46-9			10	313	U171	
Tetrabromobisphenol A	79-94-7				313		
4,4'-Isopropylidenediphenol	80-05-7				313		
Cumene hydroperoxide	80-15-9			10	313	U096	
Hydroperoxide, 1-methyl-1-phenylethyl-	80-15-9			10	X	U096	
Methyl methacrylate	80-62-6			1,000	313	U162	
Methyl 2-chloroacrylate	80-63-7	500	500				
Saccharin (manufacturing)	81-07-2			100	313	U202	
Saccharin and salts	81-07-2			100		U202	

NAME	CAS/313 Category Codes	Section 302 (EHS) TPQ	Section 304 EHS RQ	CERCLA RQ	Section 313	RCRA CODE	CAA 112(r) TQ
1-Amino-2,4-dibromoanthraquinone	81-49-2				313		
Warfarin	81-81-2	500/10,000	100	100	X 313c	P001	
Warfarin, & salts, conc.>0.3%	81-81-2			100	X 313c	P001	
C.I. Food Red 15	81-88-9				313		
1-Amino-2-methylanthraquinone	82-28-0				313		
Diphacinone	82-66-6	10/10,000	10				
PCNB	82-68-8			100	X	U185	
Pentachloronitrobenzene	82-68-8			100	X	U185	
Quintozene	82-68-8			100	313	U185	
Acenaphthene	83-32-9			100			
Diethyl phthalate	84-66-2			1,000		U088	
n-Butyl phthalate	84-74-2			10	X	U069	
Dibutyl phthalate	84-74-2			10	313	U069	
Diquat	85-00-7			1,000			
Phenanthrene	85-01-8			5,000	313		
Phthalic anhydride	85-44-9			5,000	313	U190	
Butyl benzyl phthalate	85-68-7			100			
N-Nitrosodiphenylamine	86-30-6			100	313		
Azinphos-methyl	86-50-0	10/10,000	1	1			
Guthion	86-50-0	10/10,000	1	1			
Fluorene	86-73-7			5,000			
ANTU	86-88-4	500/10,000	100	100		P072	
Thiourea, 1-naphthalenyl-	86-88-4	500/10,000	100	100		P072	
2,6-Xylidine	87-62-7				313		
2,6-Dichlorophenol	87-65-0			100		U082	
Hexachloro-1,3-butadiene	87-68-3			1	313	U128	
Hexachlorobutadiene	87-68-3			1	X	U128	
PCP	87-86-5			10	X		
Pentachlorophenol	87-86-5			10	313		
Aniline, 2,4,6-trimethyl-	88-05-1	500	500				
2,4,6-Trichlorophenol	88-06-2			10	313		
o-Nitrotoluene	88-72-2			1,000	313		
2-Nitrophenol	88-75-5			100	313		
Dinitrobutyl phenol	88-85-7	100/10,000	1,000	1,000	313	P020	
Dinoseb	88-85-7	100/10,000	1,000	1,000	X	P020	
Picric acid	88-89-1				313		
o-Anisidine	90-04-0			100	313		
2-Phenylphenol	90-43-7				313		
Michler's ketone	90-94-8				313		
Benzene, 1,3-diisocyanato-2-methyl-	91-08-7	100	100	100	X		10,000
Toluene-2,6-diisocyanate	91-08-7	100	100	100	313		10,000
Naphthalene	91-20-3			100	313	U165	
Quinoline	91-22-5			5,000	313		
o-Nitroanisole	91-23-6				313		
2-Chloronaphthalene	91-58-7			5,000		U047	
beta-Naphthylamine	91-59-8			10	313	U168	
N,N-Diethylaniline	91-66-7			1,000			
Methapyrilene	91-80-5			5,000		U155	

NAME	CAS/313 Category Codes	Section 302 (EHS) TPQ	Section 304 EHS RQ	CERCLA RQ	Section 313	RCRA CODE	CAA 112(r) TQ
3,3'-Dimethoxybenzidine-4,4'-diisocyanate	91-93-0				313#		
3,3'-Dichlorobenzidine	91-94-1			1	313	U073	
3,3'-Dimethyl-4,4'-diphenylene diisocyanate	91-97-4				313#		
Biphenyl	92-52-4			100	313		
4-Aminobiphenyl	92-67-1			1	313		
Benzidine	92-87-5			1	313	U021	
4-Nitrobiphenyl	92-93-3			10	313		
Methyleugenol	93-15-2				313		
Mecoprop	93-65-2				313		
Silvex (2,4,5-TP)	93-72-1			100			
2,4,5-T acid	93-76-5			1,000			
2,4,5-T esters	93-79-8			1,000			
2,4-D Esters	94-11-1			100	X		
2,4-D isopropyl ester	94-11-1			100	313		
Benzoyl peroxide	94-36-0				313		
Dihydrosafrole	94-58-6			10	313	U090	
Safrole	94-59-7			100	313	U203	
(4-Chloro-2-methylphenoxy) acetic acid	94-74-6				X		
MCPA	94-74-6				X		
Methoxone	94-74-6				313		
Acetic acid, (2,4-dichlorophenoxy)-	94-75-7			100	X	U240	
2,4-D	94-75-7			100	313	U240	
2,4-D Acid	94-75-7			100	X	U240	
2,4-D, salts and esters	94-75-7			100		U240	
2,4-D Esters	94-79-1			100			
2,4-D butyl ester	94-80-4			100	313		
2,4-D Esters	94-80-4			100	X		
2,4-DB	94-82-6				313		
Benzene, o-dimethyl-	95-47-6			1,000	X	U239	
o-Xylene	95-47-6			1,000	313	U239	
o-Cresol	95-48-7	1,000/10,000	100	100	313	U052	
o-Dichlorobenzene	95-50-1			100	X	U070	
1,2-Dichlorobenzene	95-50-1			100	313	U070	
o-Toluidine	95-53-4			100	313	U328	
1,2-Phenylenediamine	95-54-5				313		
2-Chlorophenol	95-57-8			100		U048	
1,2,4-Trimethylbenzene	95-63-6				313		
p-Chloro-o-toluidine	95-69-2				313		
2,4-Diaminotoluene	95-80-7			10	313		
1,2,4,5-Tetrachlorobenzene	95-94-3			5,000		U207	
2,4,5-Trichlorophenol	95-95-4			10	313		
Styrene oxide	96-09-3			100	313		
DBCP	96-12-8			1	X	U066	
1,2-Dibromo-3-chloropropane	96-12-8			1	313	U066	
1,2,3-Trichloropropane	96-18-4				313		
Methyl acrylate	96-33-3				313		

NAME	CAS/313 Category Codes	Section 302 (EHS) TPQ	Section 304 EHS RQ	CERCLA RQ	Section 313	RCRA CODE	CAA 112(r) TQ
Ethylene thiourea	96-45-7			10	313	U116	
Dichlorophene	97-23-4				313		
2,2'-Methylenebis(4-chlorophenol	97-23-4				X		
C.I. Solvent Yellow 3	97-56-3				313		
Ethyl methacrylate	97-63-2			1,000		U118	
Furfural	98-01-1			5,000		U125	
Benzenearsonic acid	98-05-5	10/10,000	10				
Benzoic trichloride	98-07-7	100	10	10	313	U023	
Benzotrichloride	98-07-7	100	10	10	X	U023	
Benzenesulfonyl chloride	98-09-9			100		U020	
Trichlorophenylsilane	98-13-5	500	500				
Benzenamine, 3-(trifluoromethyl)-	98-16-8	500	500				
Cumene	98-82-8			5,000	313	U055	
Acetophenone	98-86-2			5,000	313	U004	
Benzal chloride	98-87-3	500	5,000	5,000	313	U017	
Benzoyl chloride	98-88-4			1,000	313		
Nitrobenzene	98-95-3	10,000	1,000	1,000	313	U169	
m-Nitrotoluene	99-08-1			1,000			
Dichloran	99-30-9				313		
2,6-Dichloro-4-nitroaniline	99-30-9				X		
1,3,5-Trinitrobenzene	99-35-4			10		U234	
5-Nitro-o-toluidine	99-55-8			100	313	U181	
5-Nitro-o-anisidine	99-59-2				313		
m-Dinitrobenzene	99-65-0			100	313		
Dimethyl-p-phenylenediamine	99-98-9	10/10,000	10				
p-Nitrotoluene	99-99-0			1,000			
p-Nitroaniline	100-01-6			5,000	313	P077	
4-Nitrophenol	100-02-7			100	313	U170	
p-Nitrophenol	100-02-7			100	X	U170	
Benzene, 1-(chloromethyl)-4-nitro-	100-14-1	500/10,000	500				
p-Dinitrobenzene	100-25-4			100	313		
Ethylbenzene	100-41-4			1,000	313		
Styrene	100-42-5			1,000	313		
Benzyl chloride	100-44-7	500	100	100	313	P028	
Benzonitrile	100-47-0			5,000			
N-Nitrosopiperidine	100-75-4			10	313	U179	
Anilazine	101-05-3				313		
4,6-Dichloro-N-(2-chlorophenyl)-1,3,5-triazin-2-amine	101-05-3				X		
MBOCA	101-14-4			10	X	U158	
4,4'-Methylenebis(2-chloroaniline)	101-14-4			10	313	U158	
Barban	101-27-9			10		U280	
4-Bromophenyl phenyl ether	101-55-3			100		U030	
4,4'-Methylenebis(N,N-dimethyl)benzenamine	101-61-1				313		
MDI	101-68-8			5,000	X		
Methylenebis(phenylisocyanate)	101-68-8			5,000	313#		
4,4'-Methylenedianiline	101-77-9			10	313		

NAME	CAS/313 Category Codes	Section 302 (EHS) TPQ	Section 304 EHS RQ	CERCLA RQ	Section 313	RCRA CODE	CAA 112(r) TQ
4,4'-Diaminodiphenyl ether	101-80-4				313		
Diglycidyl resorcinol ether	101-90-6				313		
Isocyanic acid, 3,4-dichlorophenyl ester	102-36-3	500/10,000	500				
Phenylthiourea	103-85-5	100/10,000	100	100		P093	
p-Chlorophenyl isocyanate	104-12-1				313		
4-Nonylphenol	104-40-5				313$		
1,4-Phenylene diisocyanate	104-49-4				313#		
p-Anisidine	104-94-9				313		
sec-Butyl acetate	105-46-4			5,000			
2,4-Dimethylphenol	105-67-9			100	313	U101	
Benzene, p-dimethyl-	106-42-3			100	X	U239	
p-Xylene	106-42-3			100	313	U239	
p-Cresol	106-44-5			100	313	U052	
1,4-Dichlorobenzene	106-46-7			100	313	U072	
p-Chloroaniline	106-47-8			1,000	313	P024	
p-Toluidine	106-49-0			100		U353	
p-Phenylenediamine	106-50-3			5,000	313		
p-Benzoquinone	106-51-4			10	X	U197	
Quinone	106-51-4			10	313	U197	
1,2-Butylene oxide	106-88-7			100	313		
Epichlorohydrin	106-89-8	1,000	100	100	313	U041	20,000
Oxirane, (chloromethyl)-	106-89-8	1,000	100	100	X	U041	20,000
1,2-Dibromoethane	106-93-4			1	313	U067	
Ethylene dibromide	106-93-4			1	X	U067	
Propargyl bromide	106-96-7	10	10				
Butane	106-97-8						10,000
1-Butene	106-98-9						10,000
1,3-Butadiene	106-99-0			10	313		10,000
1-Butyne	107-00-6						10,000
Ethyl acetylene	107-00-6						10,000
2-Butene	107-01-7						10,000
Acrolein	107-02-8	500	1	1	313	P003	5,000
2-Propenal	107-02-8	500	1	1	X	P003	5,000
Allyl chloride	107-05-1			1,000	313		
1,2-Dichloroethane	107-06-2			100	313	U077	
Ethylene dichloride	107-06-2			100	X	U077	
Chloroethanol	107-07-3	500	500				
n-Propylamine	107-10-8			5,000		U194	
Allylamine	107-11-9	500	500		313		10,000
2-Propen-1-amine	107-11-9	500	500		X		10,000
Ethyl cyanide	107-12-0	500	10	10		P101	10,000
Propanenitrile	107-12-0	500	10	10		P101	10,000
Propionitrile	107-12-0	500	10	10		P101	10,000
Acrylonitrile	107-13-1	10,000	100	100	313	U009	20,000
2-Propenenitrile	107-13-1	10,000	100	100	X	U009	20,000
1,2-Ethanediamine	107-15-3	10,000	5,000	5,000			20,000
Ethylenediamine	107-15-3	10,000	5,000	5,000			20,000

NAME	CAS/313 Category Codes	Section 302 (EHS) TPQ	Section 304 EHS RQ	CERCLA RQ	Section 313	RCRA CODE	CAA 112(r) TQ
Formaldehyde cyanohydrin	107-16-4	1,000	1,000				
Allyl alcohol	107-18-6	1,000	100	100	313	P005	15,000
2-Propen-1-ol	107-18-6	1,000	100	100	X	P005	15,000
Propargyl alcohol	107-19-7			1,000	313	P102	
Chloroacetaldehyde	107-20-0			1,000		P023	
Ethylene glycol	107-21-1			5,000	313		
Ethene, methoxy-	107-25-5						10,000
Vinyl methyl ether	107-25-5						10,000
Chloromethyl methyl ether	107-30-2	100	10	10	313	U046	5,000
Methane, chloromethoxy-	107-30-2	100	10	10	X	U046	5,000
Formic acid, methyl ester	107-31-3						10,000
Methyl formate	107-31-3						10,000
Sarin	107-44-8	10	10				
TEPP	107-49-3	100	10	10		P111	
Tetraethyl pyrophosphate	107-49-3	100	10	10		P111	
Butyric acid	107-92-6			5,000			
Acetic acid ethenyl ester	108-05-4	1,000	5,000	5,000	X		15,000
Vinyl acetate	108-05-4	1,000	5,000	5,000	313		15,000
Vinyl acetate monomer	108-05-4	1,000	5,000	5,000	X		15,000
Methyl isobutyl ketone	108-10-1			5,000	313	U161	
Carbonochloridic acid, 1-methylethyl ester	108-23-6	1,000	1,000				15,000
Isopropyl chloroformate	108-23-6	1,000	1,000				15,000
Acetic anhydride	108-24-7			5,000			
Maleic anhydride	108-31-6			5,000	313	U147	
Benzene, m-dimethyl-	108-38-3			1,000	X	U239	
m-Xylene	108-38-3			1,000	313	U239	
m-Cresol	108-39-4			100	313	U052	
1,3-Phenylenediamine	108-45-2				313		
Resorcinol	108-46-3			5,000		U201	
Bis(2-chloro-1-methylethyl)ether	108-60-1			1,000	313	U027	
Dichloroisopropyl ether	108-60-1			1,000	X	U027	
Toluene	108-88-3			1,000	313	U220	
Chlorobenzene	108-90-7			100	313	U037	
Cyclohexanamine	108-91-8	10,000	10,000				15,000
Cyclohexylamine	108-91-8	10,000	10,000				15,000
Cyclohexanol	108-93-0				313		
Cyclohexanone	108-94-1			5,000		U057	
Phenol	108-95-2	500/10,000	1,000	1,000	313	U188	
Benzenethiol	108-98-5	500	100	100		P014	
Thiophenol	108-98-5	500	100	100		P014	
2-Methylpyridine	109-06-8			5,000	313	U191	
2-Picoline	109-06-8			5,000	X	U191	
Carbonochloridic acid, propylester	109-61-5	500	500				15,000
Propyl chloroformate	109-61-5	500	500				15,000
Pentane	109-66-0						10,000
1-Pentene	109-67-1						10,000
Butylamine	109-73-9			1,000			

NAME	CAS/313 Category Codes	Section 302 (EHS) TPQ	Section 304 EHS RQ	CERCLA RQ	Section 313	RCRA CODE	CAA 112(r) TQ
Malononitrile	109-77-3	500/10,000	1,000	1,000	313	U149	
2-Methoxyethanol	109-86-4				313		
Diethylamine	109-89-7			100			
Ethene, ethoxy-	109-92-2						10,000
Vinyl ethyl ether	109-92-2						10,000
Ethyl nitrite	109-95-5						10,000
Nitrous acid, ethyl ester	109-95-5						10,000
Furan, tetrahydro-	109-99-9			1,000		U213	
Furan	110-00-9	500	100	100	313	U124	5,000
Maleic acid	110-16-7			5,000			
Fumaric acid	110-17-8			5,000			
iso-Butyl acetate	110-19-0			5,000			
Hexane	110-54-3			5,000	X		
n-Hexane	110-54-3			5,000	313		
trans-1,4-Dichloro-2-butene	110-57-6	500	500		313		
trans-1,4-Dichlorobutene	110-57-6	500	500		X		
2-Chloroethyl vinyl ether	110-75-8			1,000		U042	
Ethanol, 2-ethoxy-	110-80-5			1,000	X	U359	
2-Ethoxyethanol	110-80-5			1,000	313	U359	
Cyclohexane	110-82-7			1,000	313	U056	
Pyridine	110-86-1			1,000	313	U196	
Piperidine	110-89-4	1,000	1,000				15,000
Diethanolamine	111-42-2			100	313		
Bis(2-chloroethyl) ether	111-44-4	10,000	10	10	313	U025	
Dichloroethyl ether	111-44-4	10,000	10	10	X	U025	
Ethylenebisdithiocarbamic acid, salts & esters	111-54-6			5,000	X	U114	
Adiponitrile	111-69-3	1,000	1,000				
Bis(2-chloroethoxy) methane	111-91-1			1,000	313	U024	
Phenol, 2-(1-methylethoxy)-, methylcarbamate	114-26-1			100	X	U411	
Propoxur	114-26-1			100	313	U411	
Azaserine	115-02-6			1		U015	
Propene	115-07-1				X		10,000
1-Propene	115-07-1				X		10,000
Propylene	115-07-1				313		10,000
Methane, oxybis-	115-10-6						10,000
Methyl ether	115-10-6						10,000
2-Methylpropene	115-11-7						10,000
1-Propene, 2-methyl-	115-11-7						10,000
Trichloroethylsilane	115-21-9	500	500				
Dimefox	115-26-4	500	500				
Chlorendic acid	115-28-6				313		
Endosulfan	115-29-7	10/10,000	1	1		P050	
Benzenemethanol, 4-chloro-.alpha.-4-chlorophenyl)-.alpha.-(trichloromethyl)-	115-32-2			10	X		
Dicofol	115-32-2			10	313		
Fensulfothion	115-90-2	500	500				

NAME	CAS/313 Category Codes	Section 302 (EHS) TPQ	Section 304 EHS RQ	CERCLA RQ	Section 313	RCRA CODE	CAA 112(r) TQ
Aldicarb	116-06-3	100/10,000	1	1	313	P070	
Ethene, tetrafluoro-	116-14-3						10,000
Tetrafluoroethylene	116-14-3				313		10,000
2-Aminoanthraquinone	117-79-3				313		
Dichlone	117-80-6			1			
Bis(2-ethylhexyl)phthalate	117-81-7			100	X	U028	
DEHP	117-81-7			100	X	U028	
Di(2-ethylhexyl) phthalate	117-81-7			100	313	U028	
Di-n-octyl phthalate	117-84-0			5,000		U107	
n-Dioctylphthalate	117-84-0			5,000		U107	
Hexachlorobenzene	118-74-1			10	313	U127	
Isopropylmethylpyrazolyl dimethylcarbamate	119-38-0	500	100	100		P192	
3,3'-Dimethoxybenzidine	119-90-4			100	313	U091	
3,3'-Dimethylbenzidine	119-93-7			10	313	U095	
o-Tolidine	119-93-7			10	X	U095	
Anthracene	120-12-7			5,000	313		
2,4-DP	120-36-5				313		
Isosafrole	120-58-1			100	313	U141	
p-Cresidine	120-71-8				313		
Catechol	120-80-9			100	313		
1,2,4-Trichlorobenzene	120-82-1			100	313		
2,4-Dichlorophenol	120-83-2			100	313	U081	
2,4-Dinitrotoluene	121-14-2			10	313	U105	
Pyrethrins	121-21-1			1			
Pyrethrins	121-29-9			1			
Triethylamine	121-44-8			5,000	313	U404	
N,N-Dimethylaniline	121-69-7			100	313		
Malathion	121-75-5			100	313		
Benzeneethanamine, alpha,alpha-dimethyl-	122-09-8			5,000		P046	
Simazine	122-34-9				313		
Diphenylamine	122-39-4				313		
Propham	122-42-9			1,000		U373	
1,2-Diphenylhydrazine	122-66-7			10	313	U109	
Hydrazine, 1,2-diphenyl-	122-66-7			10	X	U109	
Hydrazobenzene	122-66-7			10	X	U109	
Hydroquinone	123-31-9	500/10,000	100	100	313		
Maleic hydrazide	123-33-1			5,000		U148	
Propionaldehyde	123-38-6			1,000	313		
1,3-Phenylene diisocyanate	123-61-5				313#		
Propionic anhydride	123-62-6			5,000			
Paraldehyde	123-63-7			1,000	313	U182	
Butyraldehyde	123-72-8				313		
2-Butenal, (e)-	123-73-9	1,000	100	100		U053	20,000
Crotonaldehyde, (E)-	123-73-9	1,000	100	100		U053	20,000
Butyl acetate	123-86-4			5,000			
1,4-Dioxane	123-91-1			100	313	U108	

NAME	CAS/313 Category Codes	Section 302 (EHS) TPQ	Section 304 EHS RQ	CERCLA RQ	Section 313	RCRA CODE	CAA 112(r) TQ
iso-Amyl acetate	123-92-2			5,000			
Adipic acid	124-04-9			5,000			
Dimethylamine	124-40-3			1,000	313	U092	10,000
Methanamine, N-methyl-	124-40-3			1,000	X	U092	10,000
Sodium methylate	124-41-4			1,000			
Chlorodibromomethane	124-48-1			100			
Sodium cacodylate	124-65-2	100/10,000	100				
Dibromotetrafluoroethane	124-73-2				313		
Halon 2402	124-73-2				X		
Picrotoxin	124-87-8	500/10,000	500				
Tris(2,3-dibromopropyl) phosphate	126-72-7			10	313	U235	
Methacrylonitrile	126-98-7	500	1,000	1,000	313	U152	10,000
2-Propenenitrile, 2-methyl-	126-98-7	500	1,000	1,000	X	U152	10,000
Chloroprene	126-99-8			100	313		
Perchloroethylene	127-18-4			100	X	U210	
Tetrachloroethylene	127-18-4			100	313	U210	
Zinc phenolsulfonate	127-82-2			5,000	313c		
Potassium dimethyldithiocarbamate	128-03-0				313		
Sodium dimethyldithiocarbamate	128-04-1				313		
C.I. Vat Yellow 4	128-66-5				313		
Pyrene	129-00-0	1,000/10,000	5,000	5,000			
Warfarin sodium	129-06-6	100/10,000	100	100	313c		
1,4-Naphthoquinone	130-15-4			5,000		U166	
Dimethyl phthalate	131-11-3			5,000	313	U102	
Sodium pentachlorophenate	131-52-2				313		
Ammonium picrate	131-74-8			10		P009	
2-Cyclohexyl-4,6-dinitrophenol	131-89-5			100		P034	
Sodium o-phenylphenoxide	132-27-4				313		
Dibenzofuran	132-64-9			100	313		
Captan	133-06-2			10	313		
1H-Isoindole-1,3(2H)-dione, 3a,4,7,7a-tetrahydro-2-[(trichloromethyl)thio]-	133-06-2			10	X		
Folpet	133-07-3				313		
Benzoic acid, 3-amino-2,5-dichloro-	133-90-4			100	X		
Chloramben	133-90-4			100	313		
o-Anisidine hydrochloride	134-29-2				313		
alpha-Naphthylamine	134-32-7			100	313	U167	
Benzeneamine, N-hydroxy-N-nitroso, ammonium salt	135-20-6				X		
Cupferron	135-20-6				313		
Dipropyl isocinchomeronate	136-45-8				313		
Thiram	137-26-8			10	313	U244	
Ziram	137-30-4			10		P205	
Potassium N-methyldithiocarbamate	137-41-7				313		
Metham sodium	137-42-8				313		
Sodium methyldithiocarbamate	137-42-8				X		
Disodium cyanodithioimidocarbonate	138-93-2				313		
Nitrilotriacetic acid	139-13-9				313		

NAME	CAS/313 Category Codes	Section 302 (EHS) TPQ	Section 304 EHS RQ	CERCLA RQ	Section 313	RCRA CODE	CAA 112(r) TQ
3,3'-Dimethyldiphenylmethane-4,4'-diisocyanate	139-25-3				313#		
4,4'-Thiodianiline	139-65-1				313		
Benzyl cyanide	140-29-4	500	500				
Pyridine, 2-methyl-5-vinyl-	140-76-1	500	500				
Ethyl acrylate	140-88-5			1,000	313	U113	
Butyl acrylate	141-32-2				313		
Dicrotophos	141-66-2	100	100				
Ethyl acetate	141-78-6			5,000		U112	
1,3-Dichloropropane	142-28-9			1,000			
Nabam	142-59-6				313		
Cupric acetate	142-71-2			100	313c		
Dipropylamine	142-84-7			5,000		U110	
Sodium cyanide (Na(CN))	143-33-9	100	10	10	313c	P106	
Kepone	143-50-0			1		U142	
Fluoroacetic acid	144-49-0	10/10,000	10				
Endothall	145-73-3			1,000		P088	
Thiabendazole	148-79-8				313		
2-(4-Thiazolyl)-1H-benzimidazole	148-79-8				X		
Melphalan	148-82-3			1		U150	
MBT	149-30-4				X		
2-Mercaptobenzothiazole	149-30-4				313		
Dichloromethylphenylsilane	149-74-6	1,000	1,000				
Merphos	150-50-5				313		
Monuron	150-68-5				313		
Methoxyethylmercuric acetate	151-38-2	500/10,000	500		313c		
Potassium cyanide	151-50-8	100	10	10	313c	P098	
Aziridine	151-56-4	500	1	1	X	P054	10,000
Ethyleneimine	151-56-4	500	1	1	313	P054	10,000
Diphosphoramide, octamethyl-	152-16-9	100	100	100		P085	
p-Nitrosodiphenylamine	156-10-5				313		
1,2-Dichloroethylene	156-60-5			1,000		U079	
Calcium cyanamide	156-62-7			1,000	313		
Benzo(rst)pentaphene	189-55-9			10	313+	U064	
Dibenz[a,i]pyrene	189-55-9			10	X	U064	
Dibenzo(a,h)pyrene	189-64-0				313+		
Benzo[g,h,i]perylene	191-24-2			5,000	313		
Dibenzo(a,l)pyrene	191-30-0				313+		
Dibenzo(a,e)pyrene	192-65-4				313+		
Indeno(1,2,3-cd)pyrene	193-39-5			100	313+	U137	
7H-Dibenzo(c,g)carbazole	194-59-2				313+		
Benzo(j)fluoranthene	205-82-3				313+		
Benzo[b]fluoranthene	205-99-2			1	313+		
Fluoranthene	206-44-0			100	X	U120	
Benzo(k)fluoranthene	207-08-9			5,000	313+		
Acenaphthylene	208-96-8			5,000			
Benzo(a)phenanthrene	218-01-9			100	313+	U050	
Chrysene	218-01-9			100	X	U050	

NAME	CAS/313 Category Codes	Section 302 (EHS) TPQ	Section 304 EHS RQ	CERCLA RQ	Section 313	RCRA CODE	CAA 112(r) TQ
Dibenz(a,j)acridine	224-42-0				313+		
Benz[c]acridine	225-51-4			100		U016	
Dibenz(a,h)acridine	226-36-8				313+		
Isobenzan	297-78-9	100/10,000	100				
O,O-Diethyl O-pyrazinyl phosphorothioate	297-97-2	500	100	100		P040	
Thionazin	297-97-2	500	100	100		P040	
Methyl parathion	298-00-0	100/10,000	100	100	313	P071	
Parathion-methyl	298-00-0	100/10,000	100	100	X	P071	
Phorate	298-02-2	10	10	10		P094	
Disulfoton	298-04-4	500	1	1		P039	
Amphetamine	300-62-9	1,000	1,000				
Naled	300-76-5			10	313		
Lead acetate	301-04-2			10	313c	U144	
S-(2-(Ethylsulfinyl)ethyl) O,O-dimethyl ester phosphorothioic acid	301-12-2				X		
Oxydemeton methyl	301-12-2				313		
Hydrazine	302-01-2	1,000	1	1	313	U133	15,000
Lasiocarpine	303-34-4			10		U143	
Chlorambucil	305-03-3			10		U035	
2,2-Dichloro-1,1,1-trifluoroethane	306-83-2				313		
HCFC-123	306-83-2				X		
Aldrin	309-00-2	500/10,000	1	1	313	P004	
1,4:5,8-Dimethanonaphthalene, 1,2,3,4,10,10-hexachloro-1,4,4a,5,8,8a-hexahydro-(1.alpha.,4.alpha.,4a.beta.,5.alpha.,8.alpha.,8a.beta.)-	309-00-2	500/10,000	1	1	X	P004	
Diethyl-p-nitrophenyl phosphate	311-45-5			100		P041	
Bromacil	314-40-9				313		
5-Bromo-6-methyl-3-(1-methylpropyl)-2,4-(1H,3H)-pyrimidinedione	314-40-9				X		
Mexacarbate	315-18-4	500/10,000	1,000	1,000		P128	
Emetine, dihydrochloride	316-42-7	1/10,000	1				
alpha-BHC	319-84-6			10	X		
alpha-Hexachlorocyclohexane	319-84-6			10	313		
beta-BHC	319-85-7			1			
delta-BHC	319-86-8			1			
Trichloronate	327-98-0	500	500				
2,5-Dinitrophenol	329-71-5			10			
Diuron	330-54-1			100	313		
Linuron	330-55-2				313		
Diazinon	333-41-5			1	313		
Diazomethane	334-88-3			100	313		
Boron trifluoride compound with methyl ether (1:1)	353-42-4	1,000	1,000				15,000
Boron, trifluoro[oxybis[methane]]-, (T-4)-	353-42-4	1,000	1,000				15,000
Carbonic difluoride	353-50-4			1,000		U033	
Bromochlorodifluoromethane	353-59-3				313		

NAME	CAS/313 Category Codes	Section 302 (EHS) TPQ	Section 304 EHS RQ	CERCLA RQ	Section 313	RCRA CODE	CAA 112(r) TQ
Halon 1211	353-59-3				X		
HCFC-121a	354-11-0				X		
1,1,1,2-Tetrachloro-2-fluoroethane	354-11-0				313		
HCFC-121	354-14-3				X		
1,1,2,2-Tetrachloro-1-fluoroethane	354-14-3				313		
1,2-Dichloro-1,1,2-trifluoroethane	354-23-4				313		
HCFC-123a	354-23-4				X		
1-Chloro-1,1,2,2-tetrafluoroethane	354-25-6				313		
HCFC-124a	354-25-6				X		
Brucine	357-57-3			100	313	P018	
Fluoroacetyl chloride	359-06-8	10	10				
Ethylene fluorohydrin	371-62-0	10	10				
Ergotamine tartrate	379-79-3	500/10,000	500				
1,2-Dichloro-1,1,2,3,3-pentafluoropropane	422-44-6				313		
HCFC-225bb	422-44-6				X		
2,3-Dichloro-1,1,1,2,3-pentafluoropropane	422-48-0				313		
HCFC-225ba	422-48-0				X		
3,3-Dichloro-1,1,1,2,2-pentafluoropropane	422-56-0				313		
HCFC-225ca	422-56-0				X		
1,2-Dichloro-1,1,3,3,3-pentafluoropropane	431-86-7				313		
HCFC-225da	431-86-7				X		
Cyanogen	460-19-5			100		P031	10,000
Ethanedinitrile	460-19-5			100		P031	10,000
3-Chloro-1,1,1-trifluoropropane	460-35-5				313		
HCFC-253fb	460-35-5				X		
1,2-Propadiene	463-49-0						10,000
Propadiene	463-49-0						10,000
Carbon oxide sulfide (COS)	463-58-1			100	X		10,000
Carbonyl sulfide	463-58-1			100	313		10,000
2,2-Dimethylpropane	463-82-1						10,000
Propane, 2,2-dimethyl-	463-82-1						10,000
Isodrin	465-73-6	100/10,000	1	1	313	P060	
Chlorfenvinfos	470-90-6	500	500				
Auramine	492-80-8			100	X	U014	
C.I. Solvent Yellow 34	492-80-8			100	313	U014	
Chlornaphazine	494-03-1			100		U026	
Diaminotoluene	496-72-0			10		U221	
Methylmercuric dicyanamide	502-39-6	500/10,000	500		313c		
4-Aminopyridine	504-24-5	500/10,000	1,000	1,000		P008	
Pyridine, 4-amino-	504-24-5	500/10,000	1,000	1,000		P008	
1,3-Pentadiene	504-60-9			100		U186	10,000
Ethane, 1,1'-thiobis[2-chloro-	505-60-2	500	500		X		
Mustard gas	505-60-2	500	500		313		
Potassium silver cyanide	506-61-6	500	1	1	313c	P099	
Silver cyanide	506-64-9			1	313c	P104	

NAME	CAS/313 Category Codes	Section 302 (EHS) TPQ	Section 304 EHS RQ	CERCLA RQ	Section 313	RCRA CODE	CAA 112(r) TQ
Cyanogen bromide	506-68-3	500/10,000	1,000	1,000	313c	U246	
Cyanogen chloride	506-77-4			10	313c	P033	10,000
Cyanogen iodide	506-78-5	1,000/10,000	1,000		313c		
Ammonium carbonate	506-87-6			5,000			
Acetyl bromide	506-96-7			5,000			
1,3-Dichloro-1,1,2,2,3-pentafluoropropane	507-55-1				313		
HCFC-225cb	507-55-1				X		
Methane, tetranitro-	509-14-8	500	10	10		P112	10,000
Tetranitromethane	509-14-8	500	10	10	**313**	P112	10,000
Benzeneacetic acid, 4-chloro-.alpha.-(4-chlorophenyl)-.alpha.-hydroxy-, ethyl ester	510-15-6			10	X	U038	
Chlorobenzilate	510-15-6			10	313	U038	
sec-Butylamine	513-49-5			1,000			
Dithiazanine iodide	514-73-8	500/10,000	500				
o-Dinitrobenzene	528-29-0			100	313		
2-Chloroacetophenone	532-27-4			100	313		
Dazomet	533-74-4				313		
Tetrahydro-3,5-dimethyl-2H-1,3,5-thiadiazine-2-thione	533-74-4				X		
Bis(chloromethyl) ketone	534-07-6	10/10,000	10				
4,6-Dinitro-o-cresol	534-52-1	10/10,000	10	10	313	P047	
Dinitrocresol	534-52-1	10/10,000	10	10	X	P047	
4,6-Dinitro-o-cresol and salts	534-52-1			10		P047	
Crimidine	535-89-7	100/10,000	100				
Ethylbis(2-chloroethyl)amine	538-07-8	500	500				
1,2-Dichloroethylene	540-59-0				313		
Hydrazine, 1,2-dimethyl-	540-73-8			1		U099	
2,2,4-Trimethylpentane	540-84-1			1,000			
tert-Butyl acetate	540-88-5			5,000			
Uranyl acetate	541-09-3			100			
Lewisite	541-25-3	10	10				
Ethyl chloroformate	541-41-3				313		
Dithiobiuret	541-53-7	100/10,000	100	100	X	P049	
2,4-Dithiobiuret	541-53-7	100/10,000	100	100	313	P049	
1,3-Dichlorobenzene	541-73-1			100	313	U071	
Barium cyanide	542-62-1			10	313c	P013	
1,3-Dichloropropene	542-75-6			100	X	U084	
1,3-Dichloropropylene	542-75-6			100	313	U084	
3-Chloropropionitrile	542-76-7	1,000	1,000	1,000	313	P027	
Propionitrile, 3-chloro-	542-76-7	1,000	1,000	1,000	X	P027	
Bis(chloromethyl) ether	542-88-1	100	10	10	313	P016	1,000
Chloromethyl ether	542-88-1	100	10	10	X	P016	1,000
Dichloromethyl ether	542-88-1	100	10	10	X	P016	1,000
Methane, oxybis[chloro-	542-88-1	100	10	10	X	P016	1,000
Ethylthiocyanate	542-90-5	10,000	10,000				
Cadmium acetate	543-90-8			10	313c		
Cobaltous formate	544-18-3			1,000	313c		

NAME	CAS/313 Category Codes	Section 302 (EHS) TPQ	Section 304 EHS RQ	CERCLA RQ	Section 313	RCRA CODE	CAA 112(r) TQ
Copper cyanide	544-92-3			10	313c	P029	
Lithium carbonate	554-13-2				313		
m-Nitrophenol	554-84-7			100			
Tris(2-chloroethyl)amine	555-77-1	100	100				
Glycidol	556-52-5				313		
Isothiocyanatomethane	556-61-6	500	500		X		
Methyl isothiocyanate	556-61-6	500	500		313		
Methyl thiocyanate	556-64-9	10,000	10,000				20,000
Thiocyanic acid, methyl ester	556-64-9	10,000	10,000				20,000
Nickel cyanide	557-19-7			10	313c	P074	
Zinc cyanide	557-21-1			10	313c	P121	
Zinc acetate	557-34-6			1,000	313c		
Zinc formate	557-41-5			1,000	313c		
2-Chloropropylene	557-98-2						10,000
1-Propene, 2-chloro-	557-98-2						10,000
Methanesulfonyl fluoride	558-25-8	1,000	1,000				
Ethion	563-12-2	1,000	10	10			
Semicarbazide hydrochloride	563-41-7	1,000/10,000	1,000				
3-Methyl-1-butene	563-45-1						10,000
2-Methyl-1-butene	563-46-2						10,000
3-Chloro-2-methyl-1-propene	563-47-3				313		
Thallium(I) acetate	563-68-8			100	313c	U214	
C.I. Basic Green 4	569-64-2				313		
2,6-Dinitrophenol	573-56-8			10			
Benzene, 2,4-diisocyanato-1-methyl-	584-84-9	500	100	100	X		10,000
Toluene-2,4-diisocyanate	584-84-9	500	100	100	313		10,000
2-Butene-cis	590-18-1						10,000
1-Chloropropylene	590-21-6						10,000
1-Propene, 1-chloro-	590-21-6						10,000
1-Acetyl-2-thiourea	591-08-2			1,000		P002	
Calcium cyanide	592-01-8			10	313c	P021	
Mercuric cyanide	592-04-1			1	313c		
Mercuric thiocyanate	592-85-8			10	313c		
Lead thiocyanate	592-87-0			10	313c		
Vinyl bromide	593-60-2			100	313		
Methanesulfenyl chloride, trichloro-	594-42-3	500	100	100	X		10,000
Perchloromethyl mercaptan	594-42-3	500	100	100	313		10,000
Trichloromethanesulfenyl chloride	594-42-3	500	100	100	X		10,000
Tetraethyltin	597-64-8	100	100				
Bromoacetone	598-31-2			1,000		P017	
Bromotrifluoroethylene	598-73-2						10,000
Ethene, bromotrifluoro-	598-73-2						10,000
2,6-Dinitrotoluene	606-20-2			100	313	U106	
Hexachlorocyclohexane (all isomers)	608-73-1			&			
Pentachlorobenzene	608-93-5			10	313	U183	
3,4,5-Trichlorophenol	609-19-8			10			
3,4-Dinitrotoluene	610-39-9			10			
3,3'-Dimethylbenzidine	612-82-8				313		

NAME	CAS/313 Category Codes	Section 302 (EHS) TPQ	Section 304 EHS RQ	CERCLA RQ	Section 313	RCRA CODE	CAA 112(r) TQ
dihydrochloride							
o-Tolidine dihydrochloride	612-82-8				X		
3,3'-Dichlorobenzidine dihydrochloride	612-83-9				313		
Thiourea, (2-methylphenyl)-	614-78-8	500/10,000	500				
2,4-Diaminoanisole	615-05-4				313		
1,2-Phenylenediamine dihydrochloride	615-28-1				313		
N-Nitroso-N-methylurethane	615-53-2			1		U178	
Di-n-propylnitrosamine	621-64-7			10	X	U111	
N-Nitrosodi-n-propylamine	621-64-7			10	313	U111	
1,4-Phenylenediamine dihydrochloride	624-18-0				313		
2-Butene, (E)	624-64-6						10,000
2-Butene-trans	624-64-6						10,000
Methane, isocyanato-	624-83-9	500	10	10	X	P064	10,000
Methyl isocyanate	624-83-9	500	10	10	313	P064	10,000
tert-Amyl acetate	625-16-1			5,000			
sec-Amyl acetate	626-38-0			5,000			
Chloroethyl chloroformate	627-11-2	1,000	1,000				
2-Pentene, (Z)-	627-20-3						10,000
Amyl acetate	628-63-7			5,000			
Mercury fulminate	628-86-4			10	313c	P065	
Selenourea	630-10-4			1,000		P103	
Ethane, 1,1,1,2-tetrachloro-	630-20-6			100	X	U208	
1,1,1,2-Tetrachloroethane	630-20-6			100	313	U208	
Ouabain	630-60-4	100/10,000	100				
Ammonium acetate	631-61-8			5,000			
o-Toluidine hydrochloride	636-21-5			100	313	U222	
Triphenyltin chloride	639-58-7	500/10,000	500		313		
Fluoroacetamide	640-19-7	100/10,000	100	100		P057	
Dimetilan	644-64-4	500/10,000	1	1		P191	
2-Pentene, (E)-	646-04-8						10,000
Cyanuric fluoride	675-14-9	100	100		313c		
Methyl phosphonic dichloride	676-97-1	100	100				
Hexamethylphosphoramide	680-31-9			1	313		
N-Nitroso-N-methylurea	684-93-5			1	313	U177	
1-Buten-3-yne	689-97-4						10,000
Vinyl acetylene	689-97-4						10,000
Diethylarsine	692-42-2			1		P038	
Dichlorophenylarsine	696-28-6	500	1	1		P036	
Phenyl dichloroarsine	696-28-6	500	1	1		P036	
N-(3,4-Dichlorophenyl)propanamide	709-98-8				X		
Propanil	709-98-8				313		
Hexaethyl tetraphosphate	757-58-4			100		P062	
N-Nitroso-N-ethylurea	759-73-9			1	313	U176	
EPTC	759-94-4				X		
Ethyl dipropylthiocarbamate	759-94-4				313		
Methacrylic anhydride	760-93-0	500	500				
2-Butene, 1,4-dichloro-	764-41-0			1	X	U074	
1,4-Dichloro-2-butene	764-41-0			1	313	U074	

NAME	CAS/313 Category Codes	Section 302 (EHS) TPQ	Section 304 EHS RQ	CERCLA RQ	Section 313	RCRA CODE	CAA 112(r) TQ
Glycidylaldehyde	765-34-4			10		U126	
Carbophenothion	786-19-6	500	500				
1,1-Dichloro-1,2,2-trifluoroethane	812-04-4				313		
HCFC-123b	812-04-4				X		
Diethyl chlorophosphate	814-49-3	500	500				
Acrylyl chloride	814-68-6	100	100				5,000
2-Propenoyl chloride	814-68-6	100	100				5,000
Cupric tartrate	815-82-7			100	313c		
Hexamethylene-1,6-diisocyanate	822-06-0			100	313#		
Diaminotoluene	823-40-5			10		U221	
Trimethylolpropane phosphite	824-11-3	100/10,000	100				
Ametryn	834-12-8				313		
N-Ethyl-N'-(1-methylethyl)-6-(methylthio)-1,3,5,-triazine-2,4-diamine	834-12-8				X		
C.I. Solvent Yellow 14	842-07-9				313		
N-Methyl-2-pyrrolidone	872-50-4				313		
Stannane, acetoxytriphenyl-	900-95-8	500/10,000	500				
Demeton-S-methyl	919-86-8	500	500				
Methacryloyl chloride	920-46-7	100	100				
N-Nitrosodi-n-butylamine	924-16-3			10	313	U172	
N-Methylolacrylamide	924-42-5				313		
N-Nitrosopyrrolidine	930-55-2			1		U180	
2,3,6-Trichlorophenol	933-75-5			10	313c		
2,3,5-Trichlorophenol	933-78-8			10	313c		
Fonofos	944-22-9	500	500				
Phosfolan	947-02-4	100/10,000	100				
Mephosfolan	950-10-7	500	500				
Methidathion	950-37-8	500/10,000	500				
Diphenamid	957-51-7				313		
alpha - Endosulfan	959-98-8			1			
Phosphoric acid, 2-chloro-1-(2,3,5-trichlorophenyl) ethenyl dimethyl ester	961-11-5				X		
Tetrachlorvinphos	961-11-5				313		
C.I. Basic Red 1	989-38-8				313		
Norbormide	991-42-4	100/10,000	100				
Triethoxysilane	998-30-1	500	500				
Chlormequat chloride	999-81-5	100/10,000	100				
Heptachlor epoxide	1024-57-3			1			
Endosulfan sulfate	1031-07-8			1			
Triamiphos	1031-47-6	500/10,000	500				
Chromic acetate	1066-30-4			1,000	313c		
Ammonium bicarbonate	1066-33-7			5,000			
Trimethyltin chloride	1066-45-1	500/10,000	500				
Lead stearate	1072-35-1			10	313c		
Ammonium carbamate	1111-78-0			5,000			
Butylethylcarbamothioic acid S-propyl ester	1114-71-2				X		
Pebulate	1114-71-2				313		

NAME	CAS/313 Category Codes	Section 302 (EHS) TPQ	Section 304 EHS RQ	CERCLA RQ	Section 313	RCRA CODE	CAA 112(r) TQ
N-Nitrosodiethanolamine	1116-54-7			1		U173	
Propane sultone	1120-71-4			10	313	U193	
1,3-Propane sultone	1120-71-4			10	X	U193	
Nitrocyclohexane	1122-60-7	500	500				
Pyridine, 4-nitro-, 1-oxide	1124-33-0	500/10,000	500				
Metolcarb	1129-41-5	100/10,000	1,000	1,000		P190	
Cycloate	1134-23-2				313		
Decabromodiphenyl oxide	1163-19-5				313		
Ferric ammonium citrate	1185-57-5			1,000			
Dichlobenil	1194-65-6			100			
Xylenol	1300-71-6			1,000			
Arsenic pentoxide	1303-28-2	100/10,000	1	1	313c	P011	
Arsenic disulfide	1303-32-8			1	313c		
Arsenic trisulfide	1303-33-9			1	313c		
Cadmium oxide	1306-19-0	100/10,000	100		313c		
Antimony trioxide	1309-64-4			1,000	313c		
Potassium hydroxide	1310-58-3			1,000			
Sodium hydroxide	1310-73-2			1,000			
Molybdenum trioxide	1313-27-5				313		
Thorium dioxide	1314-20-1				313		
Thallic oxide	1314-32-5			100	313c	P113	
Vanadium pentoxide	1314-62-1	100/10,000	1,000	1,000	313c	P120	
Sulfur phosphide	1314-80-3			100		U189	
Zinc phosphide	1314-84-7	500	100	100	313c	P122	
Zinc phosphide (conc. <= 10%)	1314-84-7	500	100	100	313c	U249	
Zinc phosphide (conc. > 10%)	1314-84-7	500	100	100	313c	P122	
Lead sulfide	1314-87-0			10	313c		
2,4,5-T amines	1319-72-8			5,000			
Cresol (mixed isomers)	1319-77-3			100	313	U052	
2,4-D Esters	1320-18-9			100	X		
2,4-D propylene glycol butyl ether ester	1320-18-9			100	313		
Nitrotoluene	1321-12-6			1,000			
Arsenic trioxide	1327-53-3	100/10,000	1	1	313c	P012	
Arsenous oxide	1327-53-3	100/10,000	1	1	313c	P012	
Xylene (mixed isomers)	1330-20-7			100	313	U239	
Zinc borate	1332-07-6			1,000	313c		
Asbestos (friable)	1332-21-4			1	313		
Hydrogen	1333-74-0						10,000
Sodium bifluoride	1333-83-1			100			
Lead subacetate	1335-32-6			10	313c	U146	
Hexachloronaphthalene	1335-87-1				313		
Ammonium hydroxide	1336-21-6			1,000	X		
PCBs	1336-36-3			1	X		
Polychlorinated biphenyls	1336-36-3			1	313		
Methyl ethyl ketone peroxide	1338-23-4			10		U160	
Naphthenic acid	1338-24-5			100			
Ammonium bifluoride	1341-49-7			100			

NAME	CAS/313 Category Codes	Section 302 (EHS) TPQ	Section 304 EHS RQ	CERCLA RQ	Section 313	RCRA CODE	CAA 112(r) TQ
Aluminum oxide (fibrous forms)	1344-28-1				313		
Antimycin A	1397-94-0	1,000/10,000	1,000				
Dinoterb	1420-07-1	500/10,000	500				
2,2'-Bioxirane	1464-53-5	500	10	10	X	U085	
Diepoxybutane	1464-53-5	500	10	10	313	U085	
Trichloro(chloromethyl)silane	1558-25-4	100	100				
Carbofuran phenol	1563-38-8			10		U367	
Carbofuran	1563-66-2	10/10,000	10	10	313	P127	
Benezeneamine, 2,6-dinitro-N,N-dipropyl-4-(trifluoromethyl)-	1582-09-8			10	X		
Trifluralin	1582-09-8			10	313		
Mercuric acetate	1600-27-7	500/10,000	500		313c		
Hydrazine, 1,2-diethyl-	1615-80-1			10		U086	
Ethanesulfonyl chloride, 2-chloro-	1622-32-8	500	500				
Methyl tert-butyl ether	1634-04-4			1,000	313		
Aldicarb sulfone	1646-88-4			100		P203	
1,2-Dichloro-1,1-difluoroethane	1649-08-7				313		
HCFC-132b	1649-08-7				X		
Bromoxynil	1689-84-5				313		
3,5-Dibromo-4-hydroxybenzonitrile	1689-84-5				X		
Bromoxynil octanoate	1689-99-2				313		
Octanoic acid, 2,6-dibromo-4-cyanophenyl ester	1689-99-2				X		
1,1-Dichloro-1-fluoroethane	1717-00-6				313		
HCFC-141b	1717-00-6				X		
2,3,7,8-Tetrachlorodibenzo-p-dioxin (TCDD)	1746-01-6			1	313!		
Acetone thiosemicarbazide	1752-30-3	1,000/10,000	1,000				
Ammonium thiocyanate	1762-95-4			5,000			
Benzene, 2,4-dichloro-1-(4-nitrophenoxy)-	1836-75-5				X		
Nitrofen	1836-75-5				313		
Benfluralin	1861-40-1				313		
N-Butyl-N-ethyl-2,6-dinitro-4-(trifluoromethyl) benzenamine	1861-40-1				X		
Ammonium benzoate	1863-63-4			5,000			
Hexachloropropene	1888-71-7			1,000		U243	
1,3-Benzenedicarbonitrile, 2,4,5,6-tetrachloro-	1897-45-6				X		
Chlorothalonil	1897-45-6				313		
Paraquat dichloride	1910-42-5	10/10,000	10		313		
Atrazine	1912-24-9				313		
6-Chloro-N-ethyl-N'-(1-methylethyl)-1,3,5-triazine-2,4-diamine	1912-24-9				X		
Dicamba	1918-00-9			1,000	313		
3,6-Dichloro-2-methoxybenzoic acid	1918-00-9			1,000	X		
Picloram	1918-02-1				313		
2-Chloro-N-(1-methylethyl)-N-phenylacetamide	1918-16-7				X		
Propachlor	1918-16-7				313		

NAME	CAS/313 Category Codes	Section 302 (EHS) TPQ	Section 304 EHS RQ	CERCLA RQ	Section 313	RCRA CODE	CAA 112(r) TQ
2,4-D Esters	1928-38-7			100			
2,4-D 2-ethylhexyl ester	1928-43-4				313		
2,4,5-T esters	1928-47-8			1,000			
2,4-D Esters	1928-61-6			100			
2,4-D butoxyethyl ester	1929-73-3			100	313		
2,4-D Esters	1929-73-3			100	X		
2-Chloro-6-(trichloromethyl)pyridine	1929-82-4				X		
Nitrapyrin	1929-82-4				313		
C.I. Direct Black 38	1937-37-7				313		
Chloroxuron	1982-47-4	500/10,000	500				
3,6-Dichloro-2-methoxybenzoic acid, sodium salt	1982-69-0				X		
Sodium dicamba	1982-69-0				313		
Tributyltin fluoride	1983-10-4				313		
Valinomycin	2001-95-8	1,000/10,000	1,000				
2,4,5-T amines	2008-46-0			5,000			
Mercaptodimethur	2032-65-7	500/10,000	10	10	X	P199	
Methiocarb	2032-65-7	500/10,000	10	10	313	P199	
Paraquat methosulfate	2074-50-2	10/10,000	10				
Phenylsilatrane	2097-19-0	100/10,000	100				
EPN	2104-64-5	100/10,000	100				
Tributyltin methacrylate	2155-70-6				313		
Dipotassium endothall	2164-07-0				313		
7-Oxabicyclo(2.2.1)heptane-2,3-dicarboxylic acid, dipotassium salt	2164-07-0				X		
Fluometuron	2164-17-2				313		
Urea, N,N-dimethyl-N'-[3-(trifluoromethyl)phenyl]-	2164-17-2				X		
1H-Azepine-1 carbothioic acid, hexahydro-S-ethyl ester	2212-67-1				X		
Molinate	2212-67-1				313		
Cadmium stearate	2223-93-0	1,000/10,000	1,000		313c		
Thiocarbazide	2231-57-4	1,000/10,000	1,000				
Octachloronaphthalene	2234-13-1				313		
Diglycidyl ether	2238-07-5	1,000	1,000				
Prothoate	2275-18-5	100/10,000	100				
Dimethylamine dicamba	2300-66-5				313		
Carbamothioic acid, bis(1-methylethyl)-S-(2,3-dichloro-2-propenyl)ester	2303-16-4			100	X	U062	
Diallate	2303-16-4			100	313	U062	
Triallate	2303-17-5			100	313	U389	
Propargite	2312-35-8			10	313		
Chinomethionat	2439-01-2				313		
6-Methyl-1,3-dithiolo[4,5-b]quinoxalin-2-one	2439-01-2				X		
Dodecylguanidine monoacetate	2439-10-3				X		
Dodine	2439-10-3				313		
Oxydisulfoton	2497-07-6	500	500				

NAME	CAS/313 Category Codes	Section 302 (EHS) TPQ	Section 304 EHS RQ	CERCLA RQ	Section 313	RCRA CODE	CAA 112(r) TQ
Dimethyl chlorothiophosphate	2524-03-0	500	500		313		
Dimethyl phosphorochloridothioate	2524-03-0	500	500		X		
Formothion	2540-82-1	100	100				
2,4,5-T esters	2545-59-7			1,000			
1,4-Cyclohexane diisocyanate	2556-36-7				313#		
Pentadecylamine	2570-26-5	100/10,000	100				
Phosphorothioic acid, O,O-dimethyl-5-(2-(methylthio)ethyl)ester	2587-90-8	500	500				
C.I. Direct Blue 6	2602-46-2				313		
Promecarb	2631-37-0	500/10,000	1,000	1,000		P201	
Cyanophos	2636-26-2	1,000	1,000				
Azinphos-ethyl	2642-71-9	100/10,000	100				
2,3,5-Trimethylphenyl methylcarbamate	2655-15-4				313		
Phosphonothioic acid, methyl-, O-(4-nitrophenyl) O-phenyl ester	2665-30-7	500	500				
Sulfuryl fluoride	2699-79-8				313		
Vikane	2699-79-8				X		
2,4-D sodium salt	2702-72-9				313		
Phosphonothioic acid, methyl-, O-ethyl O-(4-(methylthio)phenyl) ester	2703-13-1	500	500				
Thallous malonate	2757-18-8	100/10,000	100				
5-(Aminomethyl)-3-isoxazolol	2763-96-4	500/10,000	1,000	1,000		P007	
Muscimol	2763-96-4	500/10,000	1,000	1,000		P007	
Diquat	2764-72-9			1,000			
Endothion	2778-04-3	500/10,000	500				
C.I. Disperse Yellow 3	2832-40-8				313		
2-Chloro-1,1,1,2-tetrafluoroethane	2837-89-0				313		
HCFC-124	2837-89-0				X		
Chlorpyrifos	2921-88-2			1			
Ferric ammonium oxalate	2944-67-4			1,000			
2,4-D chlorocrotyl ester	2971-38-2			100	313		
2,4-D Esters	2971-38-2			100	X		
Ammonium citrate, dibasic	3012-65-5			5,000			
Silane, (4-aminobutyl)diethoxymethyl-	3037-72-7	1,000	1,000				
C.I. Solvent Orange 7	3118-97-6				313		
Ammonium tartrate	3164-29-2			5,000			
4-Chloro-o-toluidine, hydrochloride	3165-93-3			100		U049	
1,5-Naphthalene diisocyanate	3173-72-6				313#		
Cupric nitrate	3251-23-8			100	313c		
Phosphoric acid, dimethyl 4-(methylthio) phenyl ester	3254-63-5	500	500				
1,2,3,4,6,7,8,9-octachlorodibenzo-p-dioxin	3268-87-9				313!		
O,O-Diethyl S-methyl dithiophosphate	3288-58-2			5,000		U087	
2,2-bis(Bromomethyl)-1,3-propanediol	3296-90-0				313		
Temephos	3383-96-8				313		
Zinc carbonate	3486-35-9			1,000	313c		
DDE	3547-04-4			5,000			

NAME	CAS/313 Category Codes	Section 302 (EHS) TPQ	Section 304 EHS RQ	CERCLA RQ	Section 313	RCRA CODE	CAA 112(r) TQ
Sulfoxide, 3-chloropropyl octyl	3569-57-1	500	500				
Benzimidazole, 4,5-dichloro-2-(trifluoromethyl)-	3615-21-2	500/10,000	500				
(4-Chloro-2-methylphenoxy) acetate sodium salt	3653-48-3				X		
Methoxone sodium salt	3653-48-3				313		
Sulfotep	3689-24-5	500	100	100		P109	
Tetraethyldithiopyrophosphate	3689-24-5	500	100	100		P109	
Chlorophacinone	3691-35-8	100/10,000	100				
5-Methylchrysene	3697-24-3				313+		
Amiton oxalate	3734-97-2	100/10,000	100				
Methyl phenkapton	3735-23-7	500	500				
C.I. Food Red 5	3761-53-3				313		
2,4,5-T amines	3813-14-7			5,000			
Fuberidazole	3878-19-1	100/10,000	100				
Bitoscanate	4044-65-9	500/10,000	500				
1-(3-Chloroallyl)-3,5,7-triaza-1-azoniaadamantane chloride	4080-31-3				313		
Isophorone diisocyanate	4098-71-9	500	500		313#		
Phosacetim	4104-14-7	100/10,000	100				
Dichlorosilane	4109-96-0						10,000
Silane, dichloro-	4109-96-0						10,000
4,4'-Diisocyanatodiphenyl ether	4128-73-8				313#		
2-Butenal	4170-30-3	1,000	100	100	X	U053	20,000
Crotonaldehyde	4170-30-3	1,000	100	100	313	U053	20,000
Fluenetil	4301-50-2	100/10,000	100				
Phenol, 2,2'-thiobis[4-chloro-6-methyl-	4418-66-0	100/10,000	100				
N-Nitrosomethylvinylamine	4549-40-0			10	313	P084	
C.I. Acid Green 3	4680-78-8				313		
Hexamethylenediamine, N,N'-dibutyl-	4835-11-4	500	500				
1,1'-Methylene bis(4-isocyanatocyclohexane)	5124-30-1				313#		
Carboxin	5234-68-4				313		
5,6-Dihydro-2-methyl-N-phenyl-1,4-oxathiin-3-carboxamide	5234-68-4				X		
Thiourea, (2-chlorophenyl)-	5344-82-1	100/10,000	100	100		P026	
Dibenzo(a,e)fluoranthene	5385-75-1				313+		
1-Nitropyrene	5522-43-0				313+		
Chlorpyrifos methyl	5598-13-0				313		
O,O-Dimethyl-O-(3,5,6-trichloro-2-pyridyl)phosphorothioate	5598-13-0				X		
Coumatetralyl	5836-29-3	500/10,000	500				
Cupric oxalate	5893-66-3			100	313c		
5-Chloro-3-(1,1-dimethylethyl)-6-methyl-2,4(1H,3H)-pyrimidinedione	5902-51-2				X		
Terbacil	5902-51-2				313		
Ethanol, 2,2'-oxybis-, dicarbamate	5952-26-1			5,000		U395	
Ammonium oxalate	5972-73-6			5,000			
Ammonium oxalate	6009-70-7			5,000			

NAME	CAS/313 Category Codes	Section 302 (EHS) TPQ	Section 304 EHS RQ	CERCLA RQ	Section 313	RCRA CODE	CAA 112(r) TQ
2,4,5-T amines	6369-96-6			5,000			
2,4,5-T amines	6369-97-7			5,000			
C.I. Acid Red 114	6459-94-5				313		
Thallium(I) carbonate	6533-73-9	100/10,000	100	100	313c	U215	
Thallous carbonate	6533-73-9	100/10,000	100	100	313c	U215	
Monocrotophos	6923-22-4	10/10,000	10				
4-Chlorophenyl phenyl ether	7005-72-3			5,000			
N,N'-Bis(1-methylethyl)-6-methylthio-1,3,5-triazine-2,4-diamine	7287-19-6				X		
Prometryn	7287-19-6				313		
Endrin aldehyde	7421-93-4			1			
Lead stearate	7428-48-0			10	313c		
Aluminum (fume or dust)	7429-90-5				313		
Lead	7439-92-1			10	313		
Manganese	7439-96-5				313		
Mercury	7439-97-6			1	313	U151	
Nickel	7440-02-0			100	313		
Silver	7440-22-4			1,000	313		
Sodium	7440-23-5			10			
Thallium	7440-28-0			1,000	313		
Antimony	7440-36-0			5,000	313		
Arsenic	7440-38-2			1	313		
Barium	7440-39-3				313		
Beryllium	7440-41-7			10	313	P015	
Cadmium	7440-43-9			10	313		
Chromium	7440-47-3			5,000	313		
Cobalt	7440-48-4				313		
Copper	7440-50-8			5,000	313		
Vanadium (except when contained in an alloy)	7440-62-2				313		
Zinc (fume or dust)	7440-66-6			1,000	313		
Zinc	7440-66-6			1,000			
Selenium dioxide	7446-08-4			10	313c		
Sulfur dioxide	7446-09-5	500	500				
Sulfur dioxide (anhydrous)	7446-09-5	500	500				5,000
Sulfur trioxide	7446-11-9	100	100				10,000
Lead sulfate	7446-14-2			10	313c		
Thallium(I) sulfate	7446-18-6	100/10,000	100	100	313c	P115	
Thallous sulfate	7446-18-6	100/10,000	100	100	313c	P115	
Lead phosphate	7446-27-7			10	313c	U145	
Cupric chloride	7447-39-4			10	313c		
Mercuric chloride	7487-94-7	500/10,000	500		313c		
Selenium sulfide	7488-56-4			10	313c	U205	
6-Nitrochrysene	7496-02-8				313+		
Titanium chloride (TiCl4) (T-4)-	7550-45-0	100	1,000	1,000	X		2,500
Titanium tetrachloride	7550-45-0	100	1,000	1,000	313		2,500
Sodium phosphate, dibasic	7558-79-4			5,000			
Lithium hydride	7580-67-8	100	100				

NAME	CAS/313 Category Codes	Section 302 (EHS) TPQ	Section 304 EHS RQ	CERCLA RQ	Section 313	RCRA CODE	CAA 112(r) TQ
Sodium phosphate, tribasic	7601-54-9			500			
Sodium arsenate	7631-89-2	1,000/10,000	1	1	313c		
Sodium bisulfite	7631-90-5			5,000			
Sodium nitrite	7632-00-0			100	313		
Borane, trifluoro-	7637-07-2	500	500		X		5,000
Boron trifluoride	7637-07-2	500	500		313		5,000
Lead arsenate	7645-25-2			1	313c		
Zinc chloride	7646-85-7			1,000	313c		
Hydrochloric acid	7647-01-0			5,000			
Hydrochloric acid (conc 37% or greater)	7647-01-0			5,000			15,000
Hydrochloric acid (aerosol forms only)	7647-01-0			5,000	313		
Hydrogen chloride (anhydrous)	7647-01-0	500	5,000	5,000	X		5,000
Hydrogen chloride (gas only)	7647-01-0	500	5,000	5,000	X		5,000
Antimony pentachloride	7647-18-9			1,000			
Phosphoric acid	7664-38-2			5,000			
Hydrofluoric acid	7664-39-3	100	100	100	X	U134	
Hydrofluoric acid (conc. 50% or greater)	7664-39-3	100	100	100	X	U134	1,000
Hydrogen fluoride	7664-39-3	100	100	100	313	U134	
Hydrogen fluoride (anhydrous)	7664-39-3	100	100	100	X	U134	1,000
Ammonia	7664-41-7	500	100	100			
Ammonia (anhydrous)	7664-41-7	500	100	100	X		10,000
Ammonia (conc 20% or greater)	7664-41-7			See ammonium hydroxide	X		20,000
Ammonia (includes anhydrous ammonia and aqueous ammonia from water dissociable ammonium salts and other sources; 10 percent of total aqueous ammonia is reportable under this listing)	7664-41-7				313		
Sulfuric acid (aerosol forms only)	7664-93-9	1,000	1,000	1,000	313		
Sulfuric acid	7664-93-9	1,000	1,000	1,000			
Sodium fluoride	7681-49-4			1,000			
Sodium hypochlorite	7681-52-9			100			
2,2-Dimethyl-3-(2-methyl-1-propenyl)cyclopropanecarboxylic acid (1,3,4,5,6,7-hexahydro-1,3-dioxo-2H-isoindol-2-yl)methyl ester	7696-12-0				X		
Tetramethrin	7696-12-0				313		
Nitric acid	7697-37-2	1,000	1,000	1,000	313		
Nitric acid (conc 80% or greater)	7697-37-2	1,000	1,000	1,000	X		15,000
Zinc bromide	7699-45-8			1,000	313c		
Ferric chloride	7705-08-0			1,000			
Nickel chloride	7718-54-9			100	313c		
Phosphorous trichloride	7719-12-2	1,000	1,000	1,000			15,000
Phosphorus trichloride	7719-12-2	1,000	1,000	1,000			15,000
Ferrous sulfate	7720-78-7			1,000			
Potassium permanganate	7722-64-7			100	313c		
Hydrogen peroxide (Conc.> 52%)	7722-84-1	1,000	1,000				
Phosphorus (yellow or white)	7723-14-0	100	1	1	313		

NAME	CAS/313 Category Codes	Section 302 (EHS) TPQ	Section 304 EHS RQ	CERCLA RQ	Section 313	RCRA CODE	CAA 112(r) TQ
Phosphorus	7723-14-0	100	1	1			
Bromine	7726-95-6	500	500		313		10,000
Zinc sulfate	7733-02-0			1,000	313c		
Chromic acid	7738-94-5			10	313c		
Potassium bromate	7758-01-2				313		
Ferrous chloride	7758-94-3			100			
Lead chloride	7758-95-4			10	313c		
Cupric sulfate	7758-98-7			10	313c		
Silver nitrate	7761-88-8			1	313c		
Ammonium sulfamate	7773-06-0			5,000			
Sodium chromate	7775-11-3			10	313c		
Arsenic acid	7778-39-4			1	313c	P010	
Calcium arsenate	7778-44-1	500/10,000	1	1	313c		
Potassium bichromate	7778-50-9			10	313c		
Calcium hypochlorite	7778-54-3			10			
Zinc hydrosulfite	7779-86-4			1,000	313c		
Zinc nitrate	7779-88-6			1,000	313c		
Fluorine	7782-41-4	500	10	10	313	P056	1,000
Selenium	7782-49-2			100	313		
Chlorine	7782-50-5	100	10	10	313		2,500
Ferrous sulfate	7782-63-0			1,000			
Sodium selenite	7782-82-3			100	313c		
Mercurous nitrate	7782-86-7			10	313c		
Selenious acid	7783-00-8	1,000/10,000	10	10	313c	U204	
Hydrogen sulfide	7783-06-4	500	100	100	313	U135	10,000
Hydrogen selenide	7783-07-5	10	10		313c		500
Mercuric sulfate	7783-35-9			10	313c		
Lead fluoride	7783-46-2			10	313c		
Zinc fluoride	7783-49-5			1,000	313c		
Ferric fluoride	7783-50-8			100			
Antimony trifluoride	7783-56-4			1,000	313c		
Sulfur fluoride (SF4), (T-4)-	7783-60-0	100	100				2,500
Sulfur tetrafluoride	7783-60-0	100	100				2,500
Antimony pentafluoride	7783-70-2	500	500		313c		
Tellurium hexafluoride	7783-80-4	100	100				
Arsenous trichloride	7784-34-1	500	1	1	313c		15,000
Lead arsenate	7784-40-9			1	313c		
Potassium arsenate	7784-41-0			1	313c		
Arsine	7784-42-1	100	100				1,000
Sodium arsenite	7784-46-5	500/10,000	1	1	313c		
Mevinphos	7786-34-7	500	10	10	313		
Nickel sulfate	7786-81-4			100	313c		
Beryllium chloride	7787-47-5			1	313c		
Beryllium fluoride	7787-49-7			1	313c		
Beryllium nitrate	7787-55-5			1	313c		
Ammonium chromate	7788-98-9			10	313c		
Potassium chromate	7789-00-6			10	313c		
Strontium chromate	7789-06-2			10	313c		

NAME	CAS/313 Category Codes	Section 302 (EHS) TPQ	Section 304 EHS RQ	CERCLA RQ	Section 313	RCRA CODE	CAA 112(r) TQ
Ammonium bichromate	7789-09-5			10	313c		
Cadmium bromide	7789-42-6			10	313c		
Cobaltous bromide	7789-43-7			1,000	313c		
Antimony tribromide	7789-61-9			1,000	313c		
Chlorosulfonic acid	7790-94-5			1,000			
Thallium chloride TlCl	7791-12-0	100/10,000	100	100	313c	U216	
Thallous chloride	7791-12-0	100/10,000	100	100	313c	U216	
Chlorine monoxide	7791-21-1						10,000
Chlorine oxide	7791-21-1						10,000
Selenium oxychloride	7791-23-3	500	500		313c		
Phosphine	7803-51-2	500	100	100	313	P096	5,000
Ammonium vanadate	7803-55-6			1,000	313c	P119	
Silane	7803-62-5						10,000
Camphechlor	8001-35-2	500/10,000	1	1	X	P123	
Camphene, octachloro-	8001-35-2	500/10,000	1	1	X	P123	
Toxaphene	8001-35-2	500/10,000	1	1	313	P123	
Creosote	8001-58-9				313		
Dichloropropane - Dichloropropene (mixture)	8003-19-8			100			
Pyrethrins	8003-34-7			1			
Oleum (fuming sulfuric acid)	8014-95-7			1,000			10,000
Sulfuric acid (fuming)	8014-95-7			1,000			10,000
Sulfuric acid, mixture with sulfur trioxide	8014-95-7			1,000			10,000
Demeton	8065-48-3	500	500				
Metiram	9006-42-2				313		
Polymeric diphenylmethane diisocyanate	9016-87-9				313#		
Sodium hypochlorite	10022-70-5			100			
Sulfur monochloride	[1]10025-67-9			1,000			
Chromic chloride	10025-73-7	1/10,000	1		313c		
Silane, trichloro-	10025-78-2						10,000
Trichlorosilane	10025-78-2						10,000
Phosphorus oxychloride	10025-87-3	500	1,000	1,000			5,000
Phosphoryl chloride	10025-87-3	500	1,000	1,000			5,000
Antimony trichloride	10025-91-9			1,000	313c		
Zirconium tetrachloride	10026-11-6			5,000			
Phosphorus pentachloride	10026-13-8	500	500				
Ozone	10028-15-6	100	100		313		
Ferric sulfate	10028-22-5			1,000			
Thallium sulfate	10031-59-1	100/10,000	100	100	313c		
Hydrazine sulfate	10034-93-2				313		
Sodium phosphate, dibasic	10039-32-4			5,000			
Aluminum sulfate	10043-01-3			5,000			
Ferrous ammonium sulfate	10045-89-3			1,000			
Mercuric nitrate	10045-94-0			10	313c		

[1] This is correct CAS number but not the same CAS number used on the CERCLA list. See Introduction for further explanation.

NAME	CAS/313 Category Codes	Section 302 (EHS) TPQ	Section 304 EHS RQ	CERCLA RQ	Section 313	RCRA CODE	CAA 112(r) TQ
Chlorine dioxide	10049-04-4				313		1,000
Chlorine oxide (ClO2)	10049-04-4				X		1,000
Chromous chloride	10049-05-5			1,000	313c		
trans-1,3-Dichloropropene	10061-02-6				313		
Lead nitrate	10099-74-8			10	313c		
Chromic sulfate	10101-53-8			1,000	313c		
Lead iodide	10101-63-0			10	313c		
Sodium phosphate, tribasic	10101-89-0			5,000			
Uranyl nitrate	10102-06-4			100			
Sodium selenite	10102-18-8	100/10,000	100	100	313c		
Sodium tellurite	10102-20-2	500/10,000	500				
Nitric oxide	10102-43-9	100	10	10 @		P076	10,000
Nitrogen oxide (NO)	10102-43-9	100	10	10 @		P076	10,000
Nitrogen dioxide	10102-44-0	100	10	10 @		P078	
Thallium(I) nitrate	10102-45-1			100	313c	U217	
Lead arsenate	10102-48-4			1	313c		
Cadmium chloride	10108-64-2			10	313c		
Potassium arsenite	10124-50-2	500/10,000	1	1	313c		
Sodium phosphate, dibasic	10140-65-5			5,000			
Ethanol, 1,2-dichloro-, acetate	10140-87-1	1,000	1,000				
Ammonium bisulfite	10192-30-0			5,000			
Ammonium sulfite	10196-04-0			5,000			
Cobalt carbonyl	10210-68-1	10/10,000	10		313c		
2,2-Dibromo-3-nitrilopropionamide	10222-01-2				313s		
Methamidophos	10265-92-6	100/10,000	100				
Borane, trichloro-	10294-34-5	500	500		X		5,000
Boron trichloride	10294-34-5	500	500		313		5,000
Dialifor	10311-84-9	100/10,000	100				
1,4-Bis(methylisocyanate)cyclohexane	10347-54-3				313#		
Sodium phosphate, tribasic	10361-89-4			5,000			
Cupric sulfate, ammoniated	10380-29-7			100	313c		
Mercurous nitrate	10415-75-5			10	313c		
Ferric nitrate	10421-48-4			1,000			
5-(Phenylmethyl)-3-furanyl)methyl 2,2-dimethyl-3-(2-methyl-1-propenyl)cyclopropanecarboxylate	10453-86-8				X		
Resmethrin	10453-86-8				313		
Methacrolein diacetate	10476-95-6	1,000	1,000				
Nitrogen dioxide	10544-72-6			10 @			
Sodium bichromate	10588-01-9			10	313c		
Carbendazim	10605-21-7			10		U372	
Isononylphenol	11066-49-2				313$		
Aroclor 1260	11096-82-5			1			
Aroclor 1254	11097-69-1			1			
Aroclor 1221	11104-28-2			1			
Chromic acid	11115-74-5			10	313c		
Aroclor 1232	11141-16-5			1			
Cupric acetoarsenite	12002-03-8	500/10,000	1	1	313c		

NAME	CAS/313 Category Codes	Section 302 (EHS) TPQ	Section 304 EHS RQ	CERCLA RQ	Section 313	RCRA CODE	CAA 112(r) TQ
Paris green	12002-03-8	500/10,000	1	1			
Selenious acid, dithallium(1+) salt	12039-52-0			1,000	313c	P114	
Nickel hydroxide	12054-48-7			10	313c		
Manganese, tricarbonyl methylcyclopentadienyl	12108-13-3	100	100		313c		
Carbamodithioic acid, 1,2-ethanediylbis-, zinc complex	12122-67-7				X		
Zineb	12122-67-7				313		
Ammonium fluoride	12125-01-8			100			
Ammonium chloride	12125-02-9			5,000			
Ammonium sulfide	12135-76-1			100			
Carbamodithioic acid, 1,2-ethanediylbis-, manganese complex	12427-38-2				X		
Maneb	12427-38-2				313		
Aroclor 1248	12672-29-6			1			
Aroclor 1016	12674-11-2			1			
Sulfur monochloride	[2]12771-08-3			1,000			
Terbufos	13071-79-9	100	100				
Phosphamidon	13171-21-6	100	100				
Ethoprop	13194-48-4	1,000	1,000		313		
Ethoprophos	13194-48-4	1,000	1,000		X		
Phosphorodithioic acid O-ethyl S,S-dipropyl ester	13194-48-4	1,000	1,000		X		
Fenbutatin oxide	13356-08-6				313		
Hexakis(2-methyl-2-phenylpropyl)distannoxane	13356-08-6				X		
Sodium selenate	13410-01-0	100/10,000	100		313c		
Gallium trichloride	13450-90-3	500/10,000	500				
Nickel carbonyl	13463-39-3	1	10	10	313c	P073	1,000
Iron carbonyl (Fe(CO)5), (TB-5-11)-	13463-40-6	100	100		X		2,500
Iron, pentacarbonyl-	13463-40-6	100	100		313		2,500
1,1-Dichloro-1,2,2,3,3-pentafluoropropane	13474-88-9				313		
HCFC-225cc	13474-88-9				X		
2,4,5-T salts	13560-99-1			1,000			
Beryllium nitrate	13597-99-4			1	313c		
Desmedipham	13684-56-5				313		
Zirconium nitrate	13746-89-9			5,000			
Calcium chromate	13765-19-0			10	313c	U032	
Lead fluoborate	13814-96-5			10	313c		
Ammonium fluoborate	13826-83-0			5,000			
sec-Butylamine	13952-84-6			1,000			
Cobaltous sulfamate	14017-41-5			1,000	313c		
Salcomine	14167-18-1	500/10,000	500				
Nickel nitrate	14216-75-2			100	313c		
Ammonium oxalate	14258-49-2			5,000			
Lithium chromate	14307-35-8			10	313c		

[2] CAS Number should be 10025-67-9. See Introduction for further explanation.

NAME	CAS/313 Category Codes	Section 302 (EHS) TPQ	Section 304 EHS RQ	CERCLA RQ	Section 313	RCRA CODE	CAA 112(r) TQ
Ammonium tartrate	14307-43-8			5,000			
Ferbam	14484-64-1				313		
Tris(dimethylcarbamodithioato-S,S')iron	14484-64-1				X		
Zinc ammonium chloride	14639-97-5			1,000	313c		
Zinc ammonium chloride	14639-98-6			1,000	313c		
Zirconium sulfate	14644-61-2			5,000			
Bicyclo[2.2.1]heptane-2-carbonitrile, 5-chloro-6-((((methylamino)carbonyl)oxy)imino)-,(1-alpha,2-beta,4-alpha,5-alpha,6E))-	15271-41-7	500/10,000	500				
Manganese, bis(dimethylcarbamodithioato-S,S')-	15339-36-3			10	313c	P196	
2,4,4-Trimethylhexamethylene diisocyanate	15646-96-5				313#		
Nickel ammonium sulfate	15699-18-0			100	313c		
Lead sulfate	15739-80-7			10	313c		
2,3,4-Trichlorophenol	15950-66-0			10	313c		
Alachlor	15972-60-8				313		
C.I. Direct Brown 95	16071-86-6				313		
N-Nitrosonornicotine	16543-55-8				313		
Sodium hydrosulfide	16721-80-5			5,000			
Ethanimidothioic acid, N-[[methylamino)carbonyl]	16752-77-5	500/10,000	100	100		P066	
Methomyl	16752-77-5	500/10,000	100	100		P066	
Zinc silicofluoride	16871-71-9			5,000	313c		
Ammonium silicofluoride	16919-19-0			1,000			
Zirconium potassium fluoride	16923-95-8			1,000			
2,2,4-Trimethylhexamethylene diisocyanate	16938-22-0				313#		
Decaborane(14)	17702-41-9	500/10,000	500				
Formparanate	17702-57-7	100/10,000	100	100		P197	
Benomyl	17804-35-2			10	313	U271	
Streptozotocin	18883-66-4			1		U206	
4-(Dipropylamino)-3,5-dinitrobenzenesulfonamide	19044-88-3				X		
Oryzalin	19044-88-3				313		
Diborane	19287-45-7	100	100				2,500
Diborane(6)	19287-45-7	100	100				2,500
1,2,3,7,8,9-hexachlorodibenzo-p-dioxin	19408-74-3				313!		
Pentaborane	19624-22-7	500	500				
3-(2,4-Dichloro-5-(1-methylethoxy)phenyl)-5-(1,1-dimethylethyl)-1,3,4-oxadiazol-2(3H)-one	19666-30-9				X		
Oxydiazon	19666-30-9				313		
o-Dianisidine dihydrochloride	20325-40-0				X		
3,3'-Dimethoxybenzidine dihydrochloride	20325-40-0				313		

NAME	CAS/313 Category Codes	Section 302 (EHS) TPQ	Section 304 EHS RQ	CERCLA RQ	Section 313	RCRA CODE	CAA 112(r) TQ
2-(3,4-Dichlorophenyl)-4-methyl-1,2,4-oxadiazolidine-3,5-dione	20354-26-1				X		
Methazole	20354-26-1				313		
Osmium oxide OsO4 (T-4)-	20816-12-0			1,000	X	P087	
Osmium tetroxide	20816-12-0			1,000	313	P087	
Digoxin	20830-75-5	10/10,000	10				
Daunomycin	20830-81-3			10		U059	
Aluminum phosphide	20859-73-8	500	100	100	313	P006	
Metribuzin	21087-64-9				313		
Fosthietan	21548-32-3	500	500				
Leptophos	21609-90-5	500/10,000	500				
Cyanazine	21725-46-2				313		
Mercuric oxide	21908-53-2	500/10,000	500		313c		
Chlorthiophos	21923-23-9	500	500				
Fenamiphos	22224-92-6	10/10,000	10				
Bendiocarb	22781-23-3			100	313	U278	
2,2-Dimethyl-1,3-benzodioxol-4-ol methylcarbamate	22781-23-3			100	X	U278	
Bendiocarb phenol	22961-82-6			1,000		U364	
Oxamyl	23135-22-0	100/10,000	100	100		P194	
Formetanate hydrochloride	23422-53-9	500/10,000	100	100		P198	
Pirimifos-ethyl	23505-41-1	1,000	1,000				
Thiophanate-methyl	23564-05-8			10	313	U409	
(1,2-Phenylenebis(iminocarbonothioyl)) biscarbamic acid diethyl ester	23564-06-9				X		
Thiophanate ethyl	23564-06-9				313		
Benzamide, 3,5-dichloro-N-(1,1-dimethyl-2-propynyl	23950-58-5			5,000	X	U192	
Pronamide	23950-58-5			5,000	313	U192	
Triazofos	24017-47-8	500	500				
Chlormephos	24934-91-6	500	500				
Nonylphenol	25154-52-3				313$		
Dinitrobenzene (mixed isomers)	25154-54-5			100			
Nitrophenol (mixed isomers)	25154-55-6			100			
Sodium dodecylbenzenesulfonate	25155-30-0			1,000			
Butene	25167-67-3						10,000
Trichlorophenol	25167-82-2			10	313c		
2,4,5-T esters	25168-15-4			1,000			
2,4-D Esters	25168-26-7			100			
2-((Ethoxyl((1-methylethyl)amino]phosphinothioyl]oxy) benzoic acid 1-methylethyl ester	25311-71-1				X		
Isofenphos	25311-71-1				313		
Dinitrotoluene (mixed isomers)	25321-14-6			10	313		
Dichlorobenzene	25321-22-6			100	X		
Dichlorobenzene (mixed isomers)	25321-22-6			100	313		
Diaminotoluene (mixed isomers)	25376-45-8			10	313	U221	
Toluenediamine	25376-45-8			10	X	U221	

NAME	CAS/313 Category Codes	Section 302 (EHS) TPQ	Section 304 EHS RQ	CERCLA RQ	Section 313	RCRA CODE	CAA 112(r) TQ
Dinitrophenol	25550-58-7			10			
2,2-Dimethyl-3-(2-methyl-1-propenyl)cyclopropanecarboxylic acid (3-phenoxyphenyl)methyl ester	26002-80-2				X		
Phenothrin	26002-80-2				313		
Calcium dodecylbenzenesulfonate	26264-06-2			1,000			
Carbamic acid, methyl-, O-(((2,4-dimethyl-1,3-dithiolan-2-yl)methylene)amino)-	26419-73-8	100/10,000	100	100		P185	
Benzene, 1,3-diisocyanatomethyl-	26471-62-5			100	X	U223	10,000
Toluenediisocyanate (mixed isomers)	26471-62-5			100	313	U223	10,000
Toluene diisocyanate (unspecified isomer)	26471-62-5			100	X	U223	10,000
4-Isononylphenol	26543-97-5				313$		
Sodium azide (Na(N3))	26628-22-8	500	1,000	1,000	313	P105	
Dichloropropane	26638-19-7			1,000			
N,N'-(1,4-Piperazinediylbis(2,2,2-trichloroethylidene)) bisformamide	26644-46-2				X		
Triforine	26644-46-2				313		
Dichloropropene	26952-23-8			100			
Trichloro(dichlorophenyl)silane	27137-85-5	500	500				
Dodecylbenzenesulfonic acid	27176-87-0			1,000			
4-Chloro-5-(methylamino)-2-[3-(trifluoromethyl)phenyl]-3(2H)-pyridazinone	27314-13-2				X		
Norflurazon	27314-13-2				313		
Triethanolamine dodecylbenzene sulfonate	27323-41-7			1,000			
Vanadyl sulfate	27774-13-6			1,000	313c		
d-trans-Allethrin	28057-48-9				313		
d-trans-Chrysanthemic acid of d-allethrone	28057-48-9				X		
Carbamic acid, diethylthio-, S-(p-chlorobenzyl)	28249-77-6				X		
Thiobencarb	28249-77-6				313		
Antimony potassium tartrate	28300-74-5			100	313c		
Xylylene dichloride	28347-13-9	100/10,000	100				
C.I. Direct Blue 218	28407-37-6				313		
Bromadiolone	28772-56-7	100/10,000	100				
Octachlorostyrene	29082-74-4				313		
O-(2-(Diethylamino)-6-methyl-4-pyrimidinyl)-O,O-dimethyl phosphorothioate	29232-93-7				X		
Pirimiphos methyl	29232-93-7				313		
Paraformaldehyde	30525-89-4			1,000			
Ethanimidothioic acid, 2-(dimethylamino)-N-hydroxy-2-oxo-, methyl ester	30558-43-1			5,000		U394	
Acephate	30560-19-1				313		
Acetylphosphoramidothioic acid O,S-dimethyl ester	30560-19-1				X		

NAME	CAS/313 Category Codes	Section 302 (EHS) TPQ	Section 304 EHS RQ	CERCLA RQ	Section 313	RCRA CODE	CAA 112(r) TQ
Methacryloyloxyethyl isocyanate	30674-80-7	100	100				
3-((Ethylamino)methoxyphosphinothioyl)oxy)-2-butenoic acid, 1-methylethyl ester	31218-83-4				X		
Propetamphos	31218-83-4				313		
2,4,5-TP esters	32534-95-5			100			
Amitraz	33089-61-1				313		
beta - Endosulfan	33213-65-9			1			
N-(5-(1,1-Dimethylethyl)-1,3,4-thiadiazol-2-yl)-N,N'-dimethylurea	34014-18-1				X		
Tebuthiuron	34014-18-1				313		
Dichlorotrifluoroethane	34077-87-7				313		
Diflubenzuron	35367-38-5				313		
O-Ethyl O-(4-(methylthio)phenyl)phosphorodithioic acid S-propyl ester	35400-43-2				X		
Sulprofos	35400-43-2				313		
1-(2-(2,4-Dichlorophenyl)-2-(2-propenyloxy)ethyl)-1H-imidazole	35554-44-0				X		
Imazalil	35554-44-0				313		
1-Bromo-1-(bromomethyl)-1,3-propanedicarbonitrile	35691-65-7				313		
1,2,3,4,6,7,8-heptachlorodibenzo-p-dioxin	35822-46-9				313!		
Uranyl nitrate	36478-76-9			100			
Nickel chloride	37211-05-5			100	313c		
1,3-Bis(methylisocyanate)cyclohexane	38661-72-2				313#		
Diethatyl ethyl	38727-55-8				313		
1,2,3,4,6,7,8,9-octachlorodibenzofuran	39001-02-0				313!		
2,4-Diaminoanisole sulfate	39156-41-7				313		
Thiofanox	39196-18-4	100/10,000	100	100		P045	
1,2,3,4,7,8-hexachlorodibenzo-p-dioxin	39227-28-6				313!		
Dinocap	39300-45-3				313		
Fenpropathrin	39515-41-8				313		
2,2,3,3-Tetramethylcyclopropane carboxylic acid cyano(3-phenoxyphenyl)methyl ester	39515-41-8				X		
1,2,3,7,8-pentachlorodibenzo-p-dioxin	40321-76-4				313!		
N-(1-Ethylpropyl)-3,4-dimethyl-2,6-dinitrobenzenamine	40487-42-1				X		
Pendimethalin	40487-42-1				313		
O-(4-Bromo-2-chlorophenyl)-O-ethyl-S-propylphosphorothioate	41198-08-7				X		
Profenofos	41198-08-7				313		
3,3'-Dimethylbenzidine dihydrofluoride	41766-75-0				313		
o-Tolidine dihydrofluoride	41766-75-0				X		
1,6-Dinitropyrene	42397-64-8				313+		

NAME	CAS/313 Category Codes	Section 302 (EHS) TPQ	Section 304 EHS RQ	CERCLA RQ	Section 313	RCRA CODE	CAA 112(r) TQ
1,8-Dinitropyrene	42397-65-9				313+		
Isopropanolamine dodecylbenzene sulfonate	42504-46-1			1,000			
Oxyfluorfen	42874-03-3				313		
1-(4-Chlorophenoxy)-3,3-dimethyl-1-(1H-1,2,4-triazol-1-yl)-2-butanone	43121-43-3				X		
Triadimefon	43121-43-3				313		
3-(3,5-Dichlorophenyl)-5-ethenyl-5-methyl-2,4-oxazolidinedione	50471-44-8				X		
Vinclozolin	50471-44-8				313		
Phosphonothioic acid, methyl-, S-(2-(bis(1-methylethyl)amino)ethyl) O-ethyl ester	50782-69-9	100	100				
2,3,7,8-tetrachlorodibenzofuran	51207-31-9				313!		
Hexazinone	51235-04-2				313		
2-(4-(2,4-Dichlorophenoxy)phenoxy)propanoic acid, methyl ester	51338-27-3				X		
Diclofop methyl	51338-27-3				313		
4-Chloro-alpha-(1-methylethyl)benzeneacetic acid cyano(3-phenoxyphenyl)methyl ester	51630-58-1				X		
Fenvalerate	51630-58-1				313		
Zinc ammonium chloride	52628-25-8			1,000	313c		
3-(2,2-Dichloroethenyl)-2,2-dimethylcyclopropane carboxylic acid, (3-phenoxy-phenyl)methyl ester	52645-53-1				X		
Permethrin	52645-53-1				313		
Lead stearate	52652-59-2			10	313c		
Calcium arsenite	52740-16-6			1	313c		
Carbamothioic acid, dipropyl-, S-(phenylmethyl) ester	52888-80-9			5,000		U387	
Bromacil, lithium salt	53404-19-6				313		
2,4-(1H,3H)-Pyrimidinedione, 5-bromo-6-methyl-3-(1-methylpropyl), lithium salt	53404-19-6				X		
2,4-D 2-ethyl-4-methylpentyl ester	53404-37-8				313		
Dazomet, sodium salt	53404-60-7				313		
Tetrahydro-3,5-dimethyl-2H-1,3,5-thiadiazine-2-thione, ion(1-), sodium	53404-60-7				X		
2,4-D Esters	53467-11-1			100			
Aroclor 1242	53469-21-9			1			
Pyriminil	53558-25-1	100/10,000	100				
Carbosulfan	55285-14-8			1,000		P189	
2,3,-Dihydro-5,6-dimethyl-1,4-dithiin 1,1,4,4-tetraoxide	55290-64-7				X		
Dimethipin	55290-64-7				313		
3-Iodo-2-propynyl butylcarbamate	55406-53-6				313		
Ferric ammonium oxalate	55488-87-4			1,000			
1,2,3,4,7,8,9-heptachlorodibenzofuran	55673-89-7				313!		
Lead stearate	56189-09-4			10	313c		

NAME	CAS/313 Category Codes	Section 302 (EHS) TPQ	Section 304 EHS RQ	CERCLA RQ	Section 313	RCRA CODE	CAA 112(r) TQ
2,3,4,7,8-pentachlorodibenzofuran	57117-31-4				313!		
1,2,3,7,8-pentachlorodibenzofuran	57117-41-6				313!		
1,2,3,6,7,8-hexachlorodibenzofuran	57117-44-9				313!		
Triclopyr triethylammonium salt	57213-69-1				313		
1,2,3,6,7,8-hexachlorodibenzo-p-dioxin	57653-85-7				313!		
4–Nitropyrene	57835-92-4				313+		
Zinc, dichloro(4,4-dimethyl-5((((methylamino)carbonyl)oxy)imino) pentanenitrile)-, (T-4)-	58270-08-9	100/10,000	100		313c		
Thiodicarb	59669-26-0			100	313	U410	
.alpha.-(2-Chlorophenyl)-.alpha.-4-chlorophenyl)-5-pyrimidinemethanol	60168-88-9				X		
Fenarimol	60168-88-9				313		
1-(2-(2,4-Dichlorophenyl)-4-propyl-1,3-dioxolan-2-yl)-methyl-1H-1,2,4,-triazole	60207-90-1				X		
Propiconazole	60207-90-1				313		
2,3,4,6,7,8-hexachlorodibenzofuran	60851-34-5				313!		
2,4,5-T esters	61792-07-2			1,000			
Cobalt, ((2,2'-(1,2-ethanediylbis(nitrilomethylidyne))bis(6-fluorophenylato))(2-)-N,N',O,O')-	62207-76-5	100/10,000	100		313c		
Acifluorfen, sodium salt	62476-59-9				313		
5-(2-Chloro-4-(trifluoromethyl)phenoxy)-2-nitrobenzoic acid, sodium salt	62476-59-9				X		
Chlorotetrafluoroethane	63938-10-3				313		
2-Chloro-N-(((4-methoxy-6-methyl-1,3,5-triazin-2-yl)amino]carbonyl)benzenesulfonamide	64902-72-3				X		
Chlorsulfuron	64902-72-3				313		
3,3'-Dichlorobenzidine sulfate	64969-34-2				313		
2-(4-((6-Chloro-2-benzoxazolylen)oxy)phenoxy)propanoic acid, ethyl ester	66441-23-4				X		
Fenoxaprop ethyl	66441-23-4				313		
Hydramethylnon	67485-29-4				313		
Tetrahydro-5,5-dimethyl-2(1H)-pyrimidinone(3-(4-(trifluoromethyl)phenyl)-1-(2-(4-(trifluoromethyl)phenyl)ethenyl)-2-propenylidene)hydrazone	67485-29-4				X		
1,2,3,4,6,7,8-heptachlorodibenzofuran	67562-39-4				313!		
3-(2-Chloro-3,3,3-trifluoro-1-propenyl)-2,2-dimethylcyclopropanecarboxylic acid cyano(3-phenoxyphenyl) methyl ester	68085-85-8				X		
Cyhalothrin	68085-85-8				313		
Cyfluthrin	68359-37-5				313		

NAME	CAS/313 Category Codes	Section 302 (EHS) TPQ	Section 304 EHS RQ	CERCLA RQ	Section 313	RCRA CODE	CAA 112(r) TQ
3-(2,2-Dichloroethenyl)-2,2-dimethylcyclopropanecarboxylic acid, cyano(4-fluoro-3-phenoxyphenyl)methyl ester	68359-37-5				X		
N-(2-Chloro-4-(trifluoromethyl)phenyl)-DL-valine(+)-cyano(3-phenoxyphenyl)methyl ester	69409-94-5				X		
Fluvalinate	69409-94-5				313		
Fluazifop butyl	69806-50-4				313		
2-(4-((5-(Trifluoromethyl)-2-pyridinyl)oxy)-phenoxy)propanoic acid, butyl ester	69806-50-4				X		
1,2,3,4,7,8-hexachlorodibenzofuran	70648-26-9				313!		
Abamectin	71751-41-2				313		
Avermectin B1	71751-41-2				X		
5-(2-Chloro-4-(trifluoromethyl)phenoxy)-N-methylsulfonyl)-2-nitrobenzamide	72178-02-0				X		
Fomesafen	72178-02-0				313		
Fenoxycarb	72490-01-8				313		
(2-(4-Phenoxyphenoxy)ethyl carbamic acid ethyl ester	72490-01-8				X		
1,2,3,7,8,9-hexachlorodibenzofuran	72918-21-9				313!		
2-(1-(Ethoxyimino) butyl)-5-(2-(ethylthio)propyl)-3-hydroxyl-2-cyclohexen-1-one	74051-80-2				X		
Sethoxydim	74051-80-2				313		
4-Methyldiphenylmethane-3,4-diisocyanate	75790-84-0				313#		
2,4'-Diisocyanatodiphenyl sulfide	75790-87-3				313#		
2-(4-((6-Chloro-2-quinoxalinyl)oxy]phenoxy) propanoic acid ethyl ester	76578-14-8				X		
Quizalofop-ethyl	76578-14-8				313		
Benzoic acid, 5-(2-chloro-4-(trifluoromethyl)phenoxy)-2-nitro-, 2-ethoxy-1-methyl-2-oxethyl ester	77501-63-4				313		
5-(2-Chloro-4-(trifluoromethyl)phenoxy)-2-nitro-2-ethoxy-1-methyl-2-oxoethyl ester	77501-63-4				X		
Lactofen	77501-63-4				313		
Bifenthrin	82657-04-3				313		
4-Nonylphenol, branched	84852-15-3				313$		
.alpha.-Butyl-.alpha.-(4-chlorophenyl)-1H-1,2,4-triazole-1-propanenitrile	88671-89-0				X		
Myclobutanil	88671-89-0				313		
Dichloro-1,1,2-trifluoroethane	90454-18-5				313		
Nonylphenol, branched	90481-04-2				313$		
Chlorimuron ethyl	90982-32-4				313		
Ethyl-2-(((((4-chloro-6-methoxyprimidin-2-yl)amino)carbonyl)amino)sulfonyl)ben	90982-32-4				X		

NAME	CAS/313 Category Codes	Section 302 (EHS) TPQ	Section 304 EHS RQ	CERCLA RQ	Section 313	RCRA CODE	CAA 112(r) TQ
zoate							
2-(4-Methoxy-6-methyl-1,3,5-triazin-2-yl)-methylamino)carbonyl)amino)sulfonyl) benzoic acid, methyl ester	101200-48-0				X		
Tribenuron methyl	101200-48-0				313		
1,1-Dichloro-1,2,3,3,3-pentafluoropropane	111512-56-2				313		
HCFC-225eb	111512-56-2				X		
o-Dianisidine hydrochloride	111984-09-9				X		
3,3'-Dimethoxybenzidine hydrochloride	111984-09-9				313		
Dichloropentafluoropropane	127564-92-5				313		
2,2-Dichloro-1,1,1,3,3-pentafluoropropane	128903-21-9				313		
HCFC-225aa	128903-21-9				X		
Diethyldiisocyanatobenzene	134190-37-7				313#		
1,3-Dichloro-1,1,2,3,3-pentafluoropropane	136013-79-1				313		
HCFC-225ea	136013-79-1				X		

APPENDIX A

LIST OF LISTS
CONSOLIDATED LIST OF CHEMICALS (BY ALPHBETICAL NAME) SUBJECT TO EPCRA, CERCLA AND CAA SECTION 112(r)

NAME	CAS/313 Category Codes	Section 302 (EHS) TPQ	Section 304 EHS RQ	CERCLA RQ	Section 313	RCRA CODE	CAA 112(r) TQ
Abamectin	71751-41-2				313		
Acenaphthene	83-32-9			100			
Acenaphthylene	208-96-8			5,000			
Acephate	30560-19-1				313		
Acetaldehyde	75-07-0			1,000	313	U001	10,000
Acetaldehyde, trichloro-	75-87-6			5,000		U034	
Acetamide	60-35-5			100	313		
Acetic acid	64-19-7			5,000			
Acetic acid, (2,4-dichlorophenoxy)-	94-75-7			100	X	U240	
Acetic acid ethenyl ester	108-05-4	1,000	5,000	5,000	X		15,000
Acetic anhydride	108-24-7			5,000			
Acetone	67-64-1			5,000		U002	
Acetone cyanohydrin	75-86-5	1,000	10	10	X	P069	
Acetone thiosemicarbazide	1752-30-3	1,000/10,000	1,000				
Acetonitrile	75-05-8			5,000	313	U003	
Acetophenone	98-86-2			5,000	313	U004	
2-Acetylaminofluorene	53-96-3			1	313	U005	
Acetyl bromide	506-96-7			5,000			
Acetyl chloride	75-36-5			5,000		U006	
Acetylene	74-86-2						10,000
Acetylphosphoramidothioic acid O,S-dimethyl ester	30560-19-1				X		
1-Acetyl-2-thiourea	591-08-2			1,000		P002	
Acifluorfen, sodium salt	62476-59-9				313		
Acrolein	107-02-8	500	1	1	313	P003	5,000
Acrylamide	79-06-1	1,000/10,000	5,000	5,000	313	U007	
Acrylic acid	79-10-7			5,000	313	U008	
Acrylonitrile	107-13-1	10,000	100	100	313	U009	20,000
Acrylyl chloride	814-68-6	100	100				5,000
Adipic acid	124-04-9			5,000			
Adiponitrile	111-69-3	1,000	1,000				
Alachlor	15972-60-8				313		
Aldicarb	116-06-3	100/10,000	1	1	313	P070	
Aldicarb sulfone	1646-88-4			100		P203	
Aldrin	309-00-2	500/10,000	1	1	313	P004	
d-trans-Allethrin	28057-48-9				313		
Allyl alcohol	107-18-6	1,000	100	100	313	P005	15,000
Allylamine	107-11-9	500	500		313		10,000
Allyl chloride	107-05-1			1,000	313		
Aluminum (fume or dust)	7429-90-5				313		
Aluminum oxide (fibrous forms)	1344-28-1				313		
Aluminum phosphide	20859-73-8	500	100	100	313	P006	
Aluminum sulfate	10043-01-3			5,000			
Ametryn	834-12-8				313		

NAME	CAS/313 Category Codes	Section 302 (EHS) TPQ	Section 304 EHS RQ	CERCLA RQ	Section 313	RCRA CODE	CAA 112(r) TQ
2-Aminoanthraquinone	117-79-3				313		
4-Aminoazobenzene	60-09-3				313		
4-Aminobiphenyl	92-67-1			1	313		
1-Amino-2,4-dibromoanthraquinone	81-49-2				313		
1-Amino-2-methylanthraquinone	82-28-0				313		
5-(Aminomethyl)-3-isoxazolol	2763-96-4	500/10,000	1,000	1,000		P007	
Aminopterin	54-62-6	500/10,000	500				
4-Aminopyridine	504-24-5	500/10,000	1,000	1,000		P008	
Amiton	78-53-5	500	500				
Amiton oxalate	3734-97-2	100/10,000	100				
Amitraz	33089-61-1				313		
Amitrole	61-82-5			10	313	U011	
Ammonia	7664-41-7	500	100	100			
Ammonia (anhydrous)	7664-41-7	500	100	100	X		10,000
Ammonia (conc 20% or greater)	7664-41-7			See ammonium hydroxide	X		20,000
Ammonia (includes anhydrous ammonia and aqueous ammonia from water dissociable ammonium salts and other sources; 10 percent of total aqueous ammonia is reportable under this listing)	7664-41-7				313		
Ammonium acetate	631-61-8			5,000			
Ammonium benzoate	1863-63-4			5,000			
Ammonium bicarbonate	1066-33-7			5,000			
Ammonium bichromate	7789-09-5			10	313c		
Ammonium bifluoride	1341-49-7			100			
Ammonium bisulfite	10192-30-0			5,000			
Ammonium carbamate	1111-78-0			5,000			
Ammonium carbonate	506-87-6			5,000			
Ammonium chloride	12125-02-9			5,000			
Ammonium chromate	7788-98-9			10	313c		
Ammonium citrate, dibasic	3012-65-5			5,000			
Ammonium fluoborate	13826-83-0			5,000			
Ammonium fluoride	12125-01-8			100			
Ammonium hydroxide	1336-21-6			1,000	X		
Ammonium oxalate	5972-73-6			5,000			
Ammonium oxalate	6009-70-7			5,000			
Ammonium oxalate	14258-49-2			5,000			
Ammonium picrate	131-74-8			10		P009	
Ammonium silicofluoride	16919-19-0			1,000			
Ammonium sulfamate	7773-06-0			5,000			
Ammonium sulfide	12135-76-1			100			
Ammonium sulfite	10196-04-0			5,000			
Ammonium tartrate	3164-29-2			5,000			
Ammonium tartrate	14307-43-8			5,000			
Ammonium thiocyanate	1762-95-4			5,000			
Ammonium vanadate	7803-55-6			1,000	313c	P119	
Amphetamine	300-62-9	1,000	1,000				
Amyl acetate	628-63-7			5,000			
iso-Amyl acetate	123-92-2			5,000			
sec-Amyl acetate	626-38-0			5,000			
tert-Amyl acetate	625-16-1			5,000			

NAME	CAS/313 Category Codes	Section 302 (EHS) TPQ	Section 304 EHS RQ	CERCLA RQ	Section 313	RCRA CODE	CAA 112(r) TQ
Anilazine	101-05-3				313		
Aniline	62-53-3	1,000	5,000	5,000	313	U012	
Aniline, 2,4,6-trimethyl-	88-05-1	500	500				
o-Anisidine	90-04-0			100	313		
p-Anisidine	104-94-9				313		
o-Anisidine hydrochloride	134-29-2				313		
Anthracene	120-12-7			5,000	313		
Antimony	7440-36-0			5,000	313		
Antimony Compounds	N010			&	313		
Antimony pentachloride	7647-18-9			1,000			
Antimony pentafluoride	7783-70-2	500	500		313c		
Antimony potassium tartrate	28300-74-5			100	313c		
Antimony tribromide	7789-61-9			1,000	313c		
Antimony trichloride	10025-91-9			1,000	313c		
Antimony trifluoride	7783-56-4			1,000	313c		
Antimony trioxide	1309-64-4			1,000	313c		
Antimycin A	1397-94-0	1,000/10,000	1,000				
ANTU	86-88-4	500/10,000	100	100		P072	
Aroclor 1016	12674-11-2			1			
Aroclor 1221	11104-28-2			1			
Aroclor 1232	11141-16-5			1			
Aroclor 1242	53469-21-9			1			
Aroclor 1248	12672-29-6			1			
Aroclor 1254	11097-69-1			1			
Aroclor 1260	11096-82-5			1			
Arsenic	7440-38-2			1	313		
Arsenic acid	7778-39-4			1	313c	P010	
Arsenic Compounds	N020			&	313		
Arsenic disulfide	1303-32-8			1	313c		
Arsenic pentoxide	1303-28-2	100/10,000	1	1	313c	P011	
Arsenic trioxide	1327-53-3	100/10,000	1	1	313c	P012	
Arsenic trisulfide	1303-33-9			1	313c		
Arsenous oxide	1327-53-3	100/10,000	1	1	313c	P012	
Arsenous trichloride	7784-34-1	500	1	1	313c		15,000
Arsine	7784-42-1	100	100				1,000
Asbestos (friable)	1332-21-4			1	313		
Atrazine	1912-24-9				313		
Auramine	492-80-8			100	X	U014	
Avermectin B1	71751-41-2				X		
Azaserine	115-02-6			1		U015	
1H-Azepine-1 carbothioic acid, hexahydro-S-ethyl ester	2212-67-1				X		
Azinphos-ethyl	2642-71-9	100/10,000	100				
Azinphos-methyl	86-50-0	10/10,000	1	1			
Aziridine	151-56-4	500	1	1	X	P054	10,000
Aziridine, 2-methyl	75-55-8	10,000	1	1	X	P067	10,000
Barban	101-27-9			10		U280	
Barium	7440-39-3				313		
Barium Compounds	N040				313		
Barium cyanide	542-62-1			10	313c	P013	
Bendiocarb	22781-23-3			100	313	U278	
Bendiocarb phenol	22961-82-6			1,000		U364	

NAME	CAS/313 Category Codes	Section 302 (EHS) TPQ	Section 304 EHS RQ	CERCLA RQ	Section 313	RCRA CODE	CAA 112(r) TQ
Benezeneamine, 2,6-dinitro-N,N-dipropyl-4-(trifluoromethyl)-	1582-09-8			10	X		
Benfluralin	1861-40-1				313		
Benomyl	17804-35-2			10	313	U271	
Benz[c]acridine	225-51-4			100		U016	
Benzal chloride	98-87-3	500	5,000	5,000	313	U017	
Benzamide	55-21-0				313		
Benzamide, 3,5-dichloro-N-(1,1-dimethyl-2-propynyl	23950-58-5			5,000	X	U192	
Benz[a]anthracene	56-55-3			10	313+	U018	
Benzenamine, 3-(trifluoromethyl)-	98-16-8	500	500				
Benzene	71-43-2			10	313	U019	
Benzeneacetic acid, 4-chloro-.alpha.-(4-chlorophenyl)-.alpha.-hydroxy-, ethyl ester	510-15-6			10	X	U038	
Benzeneamine, N-hydroxy-N-nitroso, ammonium salt	135-20-6				X		
Benzenearsonic acid	98-05-5	10/10,000	10				
Benzene, 1-(chloromethyl)-4-nitro-	100-14-1	500/10,000	500				
1,3-Benzenedicarbonitrile, 2,4,5,6-tetrachloro-	1897-45-6				X		
Benzene, 2,4-dichloro-1-(4-nitrophenoxy)-	1836-75-5				X		
Benzene, 2,4-diisocyanato-1-methyl-	584-84-9	500	100	100	X		10,000
Benzene, 1,3-diisocyanato-2-methyl-	91-08-7	100	100	100	X		10,000
Benzene, 1,3-diisocyanatomethyl-	26471-62-5			100	X	U223	10,000
Benzene, m-dimethyl-	108-38-3			1,000	X	U239	
Benzene, o-dimethyl-	95-47-6			1,000	X	U239	
Benzene, p-dimethyl-	106-42-3			100	X	U239	
Benzeneethanamine, alpha,alpha-dimethyl-	122-09-8			5,000		P046	
Benzenemethanol, 4-chloro-.alpha.-4-chlorophenyl)-.alpha.-(trichloromethyl)-	115-32-2			10	X		
Benzenesulfonyl chloride	98-09-9			100		U020	
Benzenethiol	108-98-5	500	100	100		P014	
Benzene, 1,1'-(2,2,2-trichloroethylidene)bis [4-methoxy-	72-43-5			1	X	U247	
Benzidine	92-87-5			1	313	U021	
Benzimidazole, 4,5-dichloro-2-(trifluoromethyl)-	3615-21-2	500/10,000	500				
Benzo[b]fluoranthene	205-99-2			1	313+		
Benzo(j)fluoranthene	205-82-3				313+		
Benzo(k)fluoranthene	207-08-9			5,000	313+		
Benzoic acid	65-85-0			5,000			
Benzoic acid, 3-amino-2,5-dichloro-	133-90-4			100	X		
Benzoic acid, 5-(2-chloro-4-(trifluoromethyl)phenoxy)-2-nitro-, 2-ethoxy-1-methyl-2-oxethyl ester	77501-63-4				313		
Benzoic trichloride	98-07-7	100	10	10	313	U023	
Benzonitrile	100-47-0			5,000			
Benzo(rst)pentaphene	189-55-9			10	313+	U064	

NAME	CAS/313 Category Codes	Section 302 (EHS) TPQ	Section 304 EHS RQ	CERCLA RQ	Section 313	RCRA CODE	CAA 112(r) TQ
Benzo[g,h,i]perylene	191-24-2			5,000	313		
Benzo(a)phenanthrene	218-01-9			100	313+	U050	
Benzo[a]pyrene	50-32-8			1	313+	U022	
p-Benzoquinone	106-51-4			10	X	U197	
Benzotrichloride	98-07-7	100	10	10	X	U023	
Benzoyl chloride	98-88-4			1,000	313		
Benzoyl peroxide	94-36-0				313		
Benzyl chloride	100-44-7	500	100	100	313	P028	
Benzyl cyanide	140-29-4	500	500				
Beryllium	7440-41-7			10	313	P015	
Beryllium chloride	7787-47-5			1	313c		
Beryllium Compounds	N050			&	313		
Beryllium fluoride	7787-49-7			1	313c		
Beryllium nitrate	7787-55-5			1	313c		
Beryllium nitrate	13597-99-4			1	313c		
alpha-BHC	319-84-6			10	X		
beta-BHC	319-85-7			1			
delta-BHC	319-86-8			1			
Bicyclo[2.2.1]heptane-2-carbonitrile, 5-chloro-6-((((methylamino)carbonyl)oxy)imino)-,(1-alpha,2-beta,4-alpha,5-alpha,6E))-	15271-41-7	500/10,000	500				
Bifenthrin	82657-04-3				313		
2,2'-Bioxirane	1464-53-5	500	10	10	X	U085	
Biphenyl	92-52-4			100	313		
2,2-bis(Bromomethyl)-1,3-propanediol	3296-90-0				313		
Bis(2-chloroethoxy) methane	111-91-1			1,000	313	U024	
Bis(2-chloroethyl) ether	111-44-4	10,000	10	10	313	U025	
Bis(chloromethyl) ether	542-88-1	100	10	10	313	P016	1,000
Bis(2-chloro-1-methylethyl)ether	108-60-1			1,000	313	U027	
Bis(chloromethyl) ketone	534-07-6	10/10,000	10				
Bis(2-ethylhexyl)phthalate	117-81-7			100	X	U028	
N,N'-Bis(1-methylethyl)-6-methylthio-1,3,5-triazine-2,4-diamine	7287-19-6				X		
1,4-Bis(methylisocyanate)cyclohexane	10347-54-3				313#		
1,3-Bis(methylisocyanate)cyclohexane	38661-72-2				313#		
Bis(tributyltin) oxide	56-35-9				313		
Bitoscanate	4044-65-9	500/10,000	500				
Borane, trichloro-	10294-34-5	500	500		X		5,000
Borane, trifluoro-	7637-07-2	500	500		X		5,000
Boron trichloride	10294-34-5	500	500		313		5,000
Boron trifluoride	7637-07-2	500	500		313		5,000
Boron trifluoride compound with methyl ether (1:1)	353-42-4	1,000	1,000				15,000
Boron, trifluoro[oxybis[methane]]-, (T-4)-	353-42-4	1,000	1,000				15,000
Bromacil	314-40-9				313		
Bromacil, lithium salt	53404-19-6				313		
Bromadiolone	28772-56-7	100/10,000	100				
Bromine	7726-95-6	500	500		313		10,000

NAME	CAS/313 Category Codes	Section 302 (EHS) TPQ	Section 304 EHS RQ	CERCLA RQ	Section 313	RCRA CODE	CAA 112(r) TQ
Bromoacetone	598-31-2			1,000		P017	
1-Bromo-1-(bromomethyl)-1,3-propanedicarbonitrile	35691-65-7				313		
Bromochlorodifluoromethane	353-59-3				313		
O-(4-Bromo-2-chlorophenyl)-O-ethyl-S-propylphosphorothioate	41198-08-7				X		
Bromoform	75-25-2			100	313	U225	
Bromomethane	74-83-9	1,000	1,000	1,000	313	U029	
5-Bromo-6-methyl-3-(1-methylpropyl)-2,4-(1H,3H)-pyrimidinedione	314-40-9				X		
4-Bromophenyl phenyl ether	101-55-3			100		U030	
Bromotrifluoroethylene	598-73-2						10,000
Bromotrifluoromethane	75-63-8				313		
Bromoxynil	1689-84-5				313		
Bromoxynil octanoate	1689-99-2				313		
Brucine	357-57-3			100	313	P018	
1,3-Butadiene	106-99-0			10	313		10,000
1,3-Butadiene, 2-methyl-	78-79-5			100			10,000
Butane	106-97-8						10,000
Butane, 2-methyl-	78-78-4						10,000
2-Butenal	4170-30-3	1,000	100	100	X	U053	20,000
2-Butenal, (e)-	123-73-9	1,000	100	100		U053	20,000
Butene	25167-67-3						10,000
1-Butene	106-98-9						10,000
2-Butene	107-01-7						10,000
2-Butene-cis	590-18-1						10,000
2-Butene, 1,4-dichloro-	764-41-0			1	X	U074	
2-Butene, (E)	624-64-6						10,000
2-Butene-trans	624-64-6						10,000
1-Buten-3-yne	689-97-4						10,000
2,4-D butoxyethyl ester	1929-73-3			100	313		
Butyl acetate	123-86-4			5,000			
iso-Butyl acetate	110-19-0			5,000			
sec-Butyl acetate	105-46-4			5,000			
tert-Butyl acetate	540-88-5			5,000			
Butyl acrylate	141-32-2				313		
n-Butyl alcohol	71-36-3			5,000	313	U031	
sec-Butyl alcohol	78-92-2				313		
tert-Butyl alcohol	75-65-0				313		
Butylamine	109-73-9			1,000			
iso-Butylamine	78-81-9			1,000			
sec-Butylamine	513-49-5			1,000			
sec-Butylamine	13952-84-6			1,000			
tert-Butylamine	75-64-9			1,000			
Butyl benzyl phthalate	85-68-7			100			
.alpha.-Butyl-.alpha.-(4-chlorophenyl)-1H-1,2,4-triazole-1-propanenitrile	88671-89-0				X		
1,2-Butylene oxide	106-88-7			100	313		
Butylethylcarbamothioic acid S-propyl ester	1114-71-2				X		
N-Butyl-N-ethyl-2,6-dinitro-4-(trifluoromethyl) benzenamine	1861-40-1				X		

NAME	CAS/313 Category Codes	Section 302 (EHS) TPQ	Section 304 EHS RQ	CERCLA RQ	Section 313	RCRA CODE	CAA 112(r) TQ
n-Butyl phthalate	84-74-2			10	X	U069	
1-Butyne	107-00-6						10,000
Butyraldehyde	123-72-8				313		
Butyric acid	107-92-6			5,000			
iso-Butyric acid	79-31-2			5,000			
Cacodylic acid	75-60-5			1		U136	
Cadmium	7440-43-9			10	313		
Cadmium acetate	543-90-8			10	313c		
Cadmium bromide	7789-42-6			10	313c		
Cadmium chloride	10108-64-2			10	313c		
Cadmium Compounds	N078			&	313		
Cadmium oxide	1306-19-0	100/10,000	100		313c		
Cadmium stearate	2223-93-0	1,000/10,000	1,000		313c		
Calcium arsenate	7778-44-1	500/10,000	1	1	313c		
Calcium arsenite	52740-16-6			1	313c		
Calcium carbide	75-20-7			10			
Calcium chromate	13765-19-0			10	313c	U032	
Calcium cyanamide	156-62-7			1,000	313		
Calcium cyanide	592-01-8			10	313c	P021	
Calcium dodecylbenzenesulfonate	26264-06-2			1,000			
Calcium hypochlorite	7778-54-3			10			
Camphechlor	8001-35-2	500/10,000	1	1	X	P123	
Camphene, octachloro-	8001-35-2	500/10,000	1	1	X	P123	
Cantharidin	56-25-7	100/10,000	100				
Captan	133-06-2			10	313		
Carbachol chloride	51-83-2	500/10,000	500				
Carbamic acid, diethylthio-, S-(p-chlorobenzyl)	28249-77-6				X		
Carbamic acid, ethyl ester	51-79-6			100	X	U238	
Carbamic acid, methyl-, O-(((2,4-dimethyl-1,3-dithiolan-2-yl)methylene)amino)-	26419-73-8	100/10,000	100	100		P185	
Carbamodithioic acid, 1,2-ethanediylbis-, manganese complex	12427-38-2				X		
Carbamodithioic acid, 1,2-ethanediylbis-, zinc complex	12122-67-7				X		
Carbamothioic acid, bis(1-methylethyl)-S-(2,3-dichloro-2-propenyl)ester	2303-16-4			100	X	U062	
Carbamothioic acid, dipropyl-, S-(phenylmethyl) ester	52888-80-9			5,000		U387	
Carbaryl	63-25-2			100	313	U279	
Carbendazim	10605-21-7			10		U372	
Carbofuran	1563-66-2	10/10,000	10	10	313	P127	
Carbofuran phenol	1563-38-8			10		U367	
Carbon disulfide	75-15-0	10,000	100	100	313	P022	20,000
Carbonic difluoride	353-50-4			1,000		U033	
Carbonic dichloride	75-44-5	10	10	10	X	P095	500
Carbonochloridic acid, methylester	79-22-1	500	1,000	1,000	X	U156	5,000
Carbonochloridic acid, 1-methylethyl ester	108-23-6	1,000	1,000				15,000
Carbonochloridic acid, propylester	109-61-5	500	500				15,000

NAME	CAS/313 Category Codes	Section 302 (EHS) TPQ	Section 304 EHS RQ	CERCLA RQ	Section 313	RCRA CODE	CAA 112(r) TQ
Carbon oxide sulfide (COS)	463-58-1			100	X		10,000
Carbon tetrachloride	56-23-5			10	313	U211	
Carbonyl sulfide	463-58-1			100	313		10,000
Carbophenothion	786-19-6	500	500				
Carbosulfan	55285-14-8			1,000		P189	
Carboxin	5234-68-4				313		
Catechol	120-80-9			100	313		
CFC-11	75-69-4			5,000	X	U121	
CFC-12	75-71-8			5,000	X	U075	
CFC-114	76-14-2				X		
CFC-115	76-15-3				X		
CFC-13	75-72-9				X		
Chinomethionat	2439-01-2				313		
Chloramben	133-90-4			100	313		
Chlorambucil	305-03-3			10		U035	
Chlordane	57-74-9	1,000	1	1	313	U036	
Chlordane (Technical Mixture and Metabolites)	N.A.			&			
Chlorendic acid	115-28-6				313		
Chlorfenvinfos	470-90-6	500	500				
Chlorimuron ethyl	90982-32-4				313		
Chlorinated Benzenes	N.A.			&			
Chlorinated Ethanes	N.A.			&			
Chlorinated Naphthalene	N.A.			&			
Chlorinated Phenols	N084			&	313		
Chlorine	7782-50-5	100	10	10	313		2,500
Chlorine dioxide	10049-04-4				313		1,000
Chlorine monoxide	7791-21-1						10,000
Chlorine oxide	7791-21-1						10,000
Chlorine oxide (ClO2)	10049-04-4				X		1,000
Chlormephos	24934-91-6	500	500				
Chlormequat chloride	999-81-5	100/10,000	100				
Chlornaphazine	494-03-1			100		U026	
Chloroacetaldehyde	107-20-0			1,000		P023	
Chloroacetic acid	79-11-8	100/10,000	100	100	313		
2-Chloroacetophenone	532-27-4			100	313		
Chloroalkyl Ethers	N.A.			&			
1-(3-Chloroallyl)-3,5,7-triaza-1-azoniaadamantane chloride	4080-31-3				313		
p-Chloroaniline	106-47-8			1,000	313	P024	
Chlorobenzene	108-90-7			100	313	U037	
Chlorobenzilate	510-15-6			10	313	U038	
2-(4-((6-Chloro-2-benzoxazolylen)oxy)phenoxy)propanoic acid, ethyl ester	66441-23-4				X		
2-Chloro-N-(2-chloroethyl)-N-methylethanamine	51-75-2	10	10		X		
p-Chloro-m-cresol	59-50-7			5,000		U039	
2,4-D chlorocrotyl ester	2971-38-2			100	313		
Chlorodibromomethane	124-48-1			100			
1-Chloro-1,1-difluoroethane	75-68-3				313		
Chlorodifluoromethane	75-45-6				313		

NAME	CAS/313 Category Codes	Section 302 (EHS) TPQ	Section 304 EHS RQ	CERCLA RQ	Section 313	RCRA CODE	CAA 112(r) TQ
5-Chloro-3-(1,1-dimethylethyl)-6-methyl-2,4(1H,3H)-pyrimidinedione	5902-51-2				X		
Chloroethane	75-00-3			100	313		10,000
Chloroethanol	107-07-3	500	500				
Chloroethyl chloroformate	627-11-2	1,000	1,000				
6-Chloro-N-ethyl-N'-(1-methylethyl)-1,3,5-triazine-2,4-diamine	1912-24-9				X		
2-Chloroethyl vinyl ether	110-75-8			1,000		U042	
Chloroform	67-66-3	10,000	10	10	313	U044	20,000
Chloromethane	74-87-3			100	313	U045	10,000
2-Chloro-N-(((4-methoxy-6-methyl-1,3,5-triazin-2-yl)amino]carbonyl)benzenesulfonamide	64902-72-3				X		
4-Chloro-5-(methylamino)-2-[3-(trifluoromethyl)phenyl]-3(2H)-pyridazinone	27314-13-2				X		
Chloromethyl ether	542-88-1	100	10	10	X	P016	1,000
4-Chloro-alpha-(1-methylethyl)benzeneacetic acid cyano(3-phenoxyphenyl)methyl ester	51630-58-1				X		
2-Chloro-N-(1-methylethyl)-N-phenylacetamide	1918-16-7				X		
Chloromethyl methyl ether	107-30-2	100	10	10	313	U046	5,000
(4-Chloro-2-methylphenoxy) acetate sodium salt	3653-48-3				X		
(4-Chloro-2-methylphenoxy) acetic acid	94-74-6				X		
3-Chloro-2-methyl-1-propene	563-47-3				313		
2-Chloronaphthalene	91-58-7			5,000		U047	
Chlorophacinone	3691-35-8	100/10,000	100				
2-Chlorophenol	95-57-8			100		U048	
Chlorophenols	N084			&	313		
1-(4-Chlorophenoxy)-3,3-dimethyl-1-(1H-1,2,4-triazol-1-yl)-2-butanone	43121-43-3				X		
.alpha.-(2-Chlorophenyl)-.alpha.-4-chlorophenyl)-5-pyrimidinemethanol	60168-88-9				X		
p-Chlorophenyl isocyanate	104-12-1				313		
4-Chlorophenyl phenyl ether	7005-72-3			5,000			
Chloropicrin	76-06-2				313		
Chloroprene	126-99-8			100	313		
3-Chloropropionitrile	542-76-7	1,000	1,000	1,000	313	P027	
2-Chloropropylene	557-98-2						10,000
1-Chloropropylene	590-21-6						10,000
2-(4-((6-Chloro-2-quinoxalinyl)oxy]phenoxy) propanoic acid ethyl ester	76578-14-8				X		
Chlorosulfonic acid	7790-94-5			1,000			
Chlorotetrafluoroethane	63938-10-3				313		
1-Chloro-1,1,2,2-tetrafluoroethane	354-25-6				313		
2-Chloro-1,1,1,2-tetrafluoroethane	2837-89-0				313		
Chlorothalonil	1897-45-6				313		

NAME	CAS/313 Category Codes	Section 302 (EHS) TPQ	Section 304 EHS RQ	CERCLA RQ	Section 313	RCRA CODE	CAA 112(r) TQ
p-Chloro-o-toluidine	95-69-2				313		
4-Chloro-o-toluidine, hydrochloride	3165-93-3			100		U049	
2-Chloro-6-(trichloromethyl)pyridine	1929-82-4				X		
2-Chloro-1,1,1-trifluoroethane	75-88-7				313		
Chlorotrifluoromethane	75-72-9				313		
5-(2-Chloro-4-(trifluoromethyl)phenoxy)-2-nitrobenzoic acid, sodium salt	62476-59-9				X		
5-(2-Chloro-4-(trifluoromethyl)phenoxy)-N-methylsulfonyl)-2-nitrobenzamide	72178-02-0				X		
5-(2-Chloro-4-(trifluoromethyl)phenoxy)-2-nitro-2-ethoxy-1-methyl-2-oxoethyl ester	77501-63-4				X		
N-(2-Chloro-4-(trifluoromethyl)phenyl)-DL-valine(+)-cyano(3-phenoxyphenyl)methyl ester	69409-94-5				X		
3-Chloro-1,1,1-trifluoropropane	460-35-5				313		
3-(2-Chloro-3,3,3-trifluoro-1-propenyl)-2,2-dimethylcyclopropanecarboxylic acid cyano(3-phenoxyphenyl) methyl ester	68085-85-8				X		
Chloroxuron	1982-47-4	500/10,000	500				
Chlorpyrifos	2921-88-2			1			
Chlorpyrifos methyl	5598-13-0				313		
Chlorsulfuron	64902-72-3				313		
Chlorthiophos	21923-23-9	500	500				
Chromic acetate	1066-30-4			1,000	313c		
Chromic acid	7738-94-5			10	313c		
Chromic acid	11115-74-5			10	313c		
Chromic chloride	10025-73-7	1/10,000	1		313c		
Chromic sulfate	10101-53-8			1,000	313c		
Chromium	7440-47-3			5,000	313		
Chromium Compounds	N090			&	313		
Chromous chloride	10049-05-5			1,000	313c		
d-trans-Chrysanthemic acid of d-allethrone	28057-48-9				X		
Chrysene	218-01-9			100	X	U050	
C.I. Acid Green 3	4680-78-8				313		
C.I. Acid Red 114	6459-94-5				313		
C.I. Basic Green 4	569-64-2				313		
C.I. Basic Red 1	989-38-8				313		
C.I. Direct Black 38	1937-37-7				313		
C.I. Direct Blue 218	28407-37-6				313		
C.I. Direct Blue 6	2602-46-2				313		
C.I. Direct Brown 95	16071-86-6				313		
C.I. Disperse Yellow 3	2832-40-8				313		
C.I. Food Red 5	3761-53-3				313		
C.I. Food Red 15	81-88-9				313		
C.I. Solvent Orange 7	3118-97-6				313		
C.I. Solvent Yellow 3	97-56-3				313		
C.I. Solvent Yellow 14	842-07-9				313		

NAME	CAS/313 Category Codes	Section 302 (EHS) TPQ	Section 304 EHS RQ	CERCLA RQ	Section 313	RCRA CODE	CAA 112(r) TQ
C.I. Solvent Yellow 34	492-80-8			100	313	U014	
C.I. Vat Yellow 4	128-66-5				313		
Cobalt	7440-48-4				313		
Cobalt carbonyl	10210-68-1	10/10,000	10		313c		
Cobalt Compounds	N096			&	313		
Cobalt, ((2,2'-(1,2-ethanediylbis(nitrilomethylidyne))bis(6-fluorophenylato))(2-)-N,N',O,O')-	62207-76-5	100/10,000	100		313c		
Cobaltous bromide	7789-43-7			1,000	313c		
Cobaltous formate	544-18-3			1,000	313c		
Cobaltous sulfamate	14017-41-5			1,000	313c		
Coke Oven Emissions	N.A.			1			
Colchicine	64-86-8	10/10,000	10				
Copper	7440-50-8			5,000	313		
Copper Compounds	N100			&	313		
Copper cyanide	544-92-3			10	313c	P029	
Coumaphos	56-72-4	100/10,000	10	10			
Coumatetralyl	5836-29-3	500/10,000	500				
Creosote	N.A.			1		U051	
Creosote	8001-58-9				313		
p-Cresidine	120-71-8				313		
m-Cresol	108-39-4			100	313	U052	
o-Cresol	95-48-7	1,000/10,000	100	100	313	U052	
p-Cresol	106-44-5			100	313	U052	
Cresol (mixed isomers)	1319-77-3			100	313	U052	
Crimidine	535-89-7	100/10,000	100				
Crotonaldehyde	4170-30-3	1,000	100	100	313	U053	20,000
Crotonaldehyde, (E)-	123-73-9	1,000	100	100		U053	20,000
Cumene	98-82-8			5,000	313	U055	
Cumene hydroperoxide	80-15-9			10	313	U096	
Cupferron	135-20-6				313		
Cupric acetate	142-71-2			100	313c		
Cupric acetoarsenite	12002-03-8	500/10,000	1	1	313c		
Cupric chloride	7447-39-4			10	313c		
Cupric nitrate	3251-23-8			100	313c		
Cupric oxalate	5893-66-3			100	313c		
Cupric sulfate	7758-98-7			10	313c		
Cupric sulfate, ammoniated	10380-29-7			100	313c		
Cupric tartrate	815-82-7			100	313c		
Cyanazine	21725-46-2				313		
Cyanide Compounds	N106			&	313		
Cyanides (soluble salts and complexes), not otherwise specified	N.A.			10	313c	P030	
Cyanogen	460-19-5			100		P031	10,000
Cyanogen bromide	506-68-3	500/10,000	1,000	1,000	313c	U246	
Cyanogen chloride	506-77-4			10	313c	P033	10,000
Cyanogen iodide	506-78-5	1,000/10,000	1,000		313c		
Cyanophos	2636-26-2	1,000	1,000				
Cyanuric fluoride	675-14-9	100	100		313c		
Cycloate	1134-23-2				313		
2,5-Cyclohexadiene-1,4-dione, 2,3,5-tris(1-aziridinyl)-	68-76-8				X		

NAME	CAS/313 Category Codes	Section 302 (EHS) TPQ	Section 304 EHS RQ	CERCLA RQ	Section 313	RCRA CODE	CAA 112(r) TQ
Cyclohexanamine	108-91-8	10,000	10,000				15,000
Cyclohexane	110-82-7			1,000	313	U056	
1,4-Cyclohexane diisocyanate	2556-36-7				313#		
Cyclohexane, 1,2,3,4,5,6-hexachloro-,(1.alpha.,2.alpha.,3.beta.,4.alpha.,5.alpha.,6.beta.)-	58-89-9	1,000/10,000	1	1	X	U129	
Cyclohexanol	108-93-0				313		
Cyclohexanone	108-94-1			5,000		U057	
Cycloheximide	66-81-9	100/10,000	100				
Cyclohexylamine	108-91-8	10,000	10,000				15,000
2-Cyclohexyl-4,6-dinitrophenol	131-89-5			100		P034	
Cyclophosphamide	50-18-0			10		U058	
Cyclopropane	75-19-4						10,000
Cyfluthrin	68359-37-5				313		
Cyhalothrin	68085-85-8				313		
2,4-D	94-75-7			100	313	U240	
2,4-D Acid	94-75-7			100	X	U240	
2,4-D butyl ester	94-80-4			100	313		
2,4-D Esters	94-11-1			100	X		
2,4-D Esters	94-79-1			100			
2,4-D Esters	94-80-4			100	X		
2,4-D Esters	1320-18-9			100	X		
2,4-D Esters	1928-38-7			100			
2,4-D Esters	1928-61-6			100			
2,4-D Esters	1929-73-3			100	X		
2,4-D Esters	2971-38-2			100	X		
2,4-D Esters	25168-26-7			100			
2,4-D Esters	53467-11-1			100			
2,4-D isopropyl ester	94-11-1			100	313		
2,4-D propylene glycol butyl ether ester	1320-18-9			100	313		
2,4-D, salts and esters	94-75-7			100		U240	
Daunomycin	20830-81-3			10		U059	
Dazomet	533-74-4				313		
Dazomet, sodium salt	53404-60-7				313		
2,4-DB	94-82-6				313		
DBCP	96-12-8			1	X	U066	
DDD	72-54-8			1		U060	
DDE	72-55-9			1			
DDE	3547-04-4			5,000			
DDT	50-29-3			1		U061	
DDT and Metabolites	N.A.			&			
Decaborane(14)	17702-41-9	500/10,000	500				
Decabromodiphenyl oxide	1163-19-5				313		
DEF	78-48-8				X		
DEHP	117-81-7			100	X	U028	
Demeton	8065-48-3	500	500				
Demeton-S-methyl	919-86-8	500	500				
Desmedipham	13684-56-5				313		
2,4-D 2-ethylhexyl ester	1928-43-4				313		
2,4-D 2-ethyl-4-methylpentyl ester	53404-37-8				313		
Dialifor	10311-84-9	100/10,000	100				

NAME	CAS/313 Category Codes	Section 302 (EHS) TPQ	Section 304 EHS RQ	CERCLA RQ	Section 313	RCRA CODE	CAA 112(r) TQ
Diallate	2303-16-4			100	313	U062	
2,4-Diaminoanisole	615-05-4				313		
2,4-Diaminoanisole sulfate	39156-41-7				313		
4,4'-Diaminodiphenyl ether	101-80-4				313		
Diaminotoluene	496-72-0			10		U221	
Diaminotoluene	823-40-5			10		U221	
2,4-Diaminotoluene	95-80-7			10	313		
Diaminotoluene (mixed isomers)	25376-45-8			10	313	U221	
o-Dianisidine dihydrochloride	20325-40-0				X		
o-Dianisidine hydrochloride	111984-09-9				X		
Diazinon	333-41-5			1	313		
Diazomethane	334-88-3			100	313		
Dibenz(a,h)acridine	226-36-8				313+		
Dibenz(a,j)acridine	224-42-0				313+		
Dibenz[a,h]anthracene	53-70-3			1	313+	U063	
7H-Dibenzo(c,g)carbazole	194-59-2				313+		
Dibenzo(a,e)fluoranthene	5385-75-1				313+		
Dibenzofuran	132-64-9			100	313		
Dibenzo(a,e)pyrene	192-65-4				313+		
Dibenzo(a,h)pyrene	189-64-0				313+		
Dibenzo(a,l)pyrene	191-30-0				313+		
Dibenz[a,i]pyrene	189-55-9			10	X	U064	
Diborane	19287-45-7	100	100				2,500
Diborane(6)	19287-45-7	100	100				2,500
1,2-Dibromo-3-chloropropane	96-12-8			1	313	U066	
1,2-Dibromoethane	106-93-4			1	313	U067	
3,5-Dibromo-4-hydroxybenzonitrile	1689-84-5				X		
2,2-Dibromo-3-nitrilopropionamide	10222-01-2				313s		
Dibromotetrafluoroethane	124-73-2				313		
Dibutyl phthalate	84-74-2			10	313	U069	
Dicamba	1918-00-9			1,000	313		
Dichlobenil	1194-65-6			100			
Dichlone	117-80-6			1			
Dichloran	99-30-9				313		
o-Dichlorobenzene	95-50-1			100	X	U070	
Dichlorobenzene	25321-22-6			100	X		
1,2-Dichlorobenzene	95-50-1			100	313	U070	
1,3-Dichlorobenzene	541-73-1			100	313	U071	
1,4-Dichlorobenzene	106-46-7			100	313	U072	
Dichlorobenzene (mixed isomers)	25321-22-6			100	313		
Dichlorobenzidine	N.A.			&			
3,3'-Dichlorobenzidine	91-94-1			1	313	U073	
3,3'-Dichlorobenzidine dihydrochloride	612-83-9				313		
3,3'-Dichlorobenzidine sulfate	64969-34-2				313		
Dichlorobromomethane	75-27-4			5,000	313		
trans-1,4-Dichloro-2-butene	110-57-6	500	500		313		
trans-1,4-Dichlorobutene	110-57-6	500	500		X		
1,4-Dichloro-2-butene	764-41-0			1	313	U074	
4,6-Dichloro-N-(2-chlorophenyl)-1,3,5-triazin-2-amine	101-05-3				X		
1,2-Dichloro-1,1-difluoroethane	1649-08-7				313		
Dichlorodifluoromethane	75-71-8			5,000	313	U075	

NAME	CAS/313 Category Codes	Section 302 (EHS) TPQ	Section 304 EHS RQ	CERCLA RQ	Section 313	RCRA CODE	CAA 112(r) TQ
1,1-Dichloroethane	75-34-3			1,000	X	U076	
1,2-Dichloroethane	107-06-2			100	313	U077	
3-(2,2-Dichloroethenyl)-2,2-dimethylcyclopropane carboxylic acid, (3-phenoxy-phenyl)methyl ester	52645-53-1				X		
3-(2,2-Dichloroethenyl)-2,2-dimethylcyclopropanecarboxylic acid, cyano(4-fluoro-3-phenoxyphenyl)methyl ester	68359-37-5				X		
1,1-Dichloroethylene	75-35-4			100	X	U078	10,000
1,2-Dichloroethylene	156-60-5			1,000		U079	
1,2-Dichloroethylene	540-59-0				313		
Dichloroethyl ether	111-44-4	10,000	10	10	X	U025	
1,1-Dichloro-1-fluoroethane	1717-00-6				313		
Dichlorofluoromethane	75-43-4				313		
Dichloroisopropyl ether	108-60-1			1,000	X	U027	
Dichloromethane	75-09-2			1,000	313	U080	
3,6-Dichloro-2-methoxybenzoic acid	1918-00-9			1,000	X		
3,6-Dichloro-2-methoxybenzoic acid, sodium salt	1982-69-0				X		
Dichloromethyl ether	542-88-1	100	10	10	X	P016	1,000
3-(2,4-Dichloro-5-(1-methylethoxy)phenyl)-5-(1,1-dimethylethyl)-1,3,4-oxadiazol-2(3H)-one	19666-30-9				X		
Dichloromethylphenylsilane	149-74-6	1,000	1,000				
2,6-Dichloro-4-nitroaniline	99-30-9				X		
Dichloropentafluoropropane	127564-92-5				313		
2,2-Dichloro-1,1,1,3,3-pentafluoropropane	128903-21-9				313		
2,3-Dichloro-1,1,1,2,3-pentafluoropropane	422-48-0				313		
1,2-Dichloro-1,1,2,3,3-pentafluoropropane	422-44-6				313		
3,3-Dichloro-1,1,1,2,2-pentafluoropropane	422-56-0				313		
1,3-Dichloro-1,1,2,2,3-pentafluoropropane	507-55-1				313		
1,1-Dichloro-1,2,2,3,3-pentafluoropropane	13474-88-9				313		
1,2-Dichloro-1,1,3,3,3-pentafluoropropane	431-86-7				313		
1,3-Dichloro-1,1,2,3,3-pentafluoropropane	136013-79-1				313		
1,1-Dichloro-1,2,3,3,3-pentafluoropropane	111512-56-2				313		
Dichlorophene	97-23-4				313		
2,6-Dichlorophenol	87-65-0			100		U082	
2,4-Dichlorophenol	120-83-2			100	313	U081	
2-(4-(2,4-Dichlorophenoxy)phenoxy)propanoic acid, methyl ester	51338-27-3				X		
Dichlorophenylarsine	696-28-6	500	1	1		P036	

NAME	CAS/313 Category Codes	Section 302 (EHS) TPQ	Section 304 EHS RQ	CERCLA RQ	Section 313	RCRA CODE	CAA 112(r) TQ
3-(3,5-Dichlorophenyl)-5-ethenyl-5-methyl-2,4-oxazolidinedione	50471-44-8				X		
2-(3,4-Dichlorophenyl)-4-methyl-1,2,4-oxadiazolidine-3,5-dione	20354-26-1				X		
N-(3,4-Dichlorophenyl)propanamide	709-98-8				X		
1-(2-(2,4-Dichlorophenyl)-2-(2-propenyloxy)ethyl)-1H-imidazole	35554-44-0				X		
1-(2-(2,4-Dichlorophenyl)-4-propyl-1,3-dioxolan-2-yl)-methyl-1H-1,2,4,-triazole	60207-90-1				X		
Dichloropropane	26638-19-7			1,000			
Dichloropropane - Dichloropropene (mixture)	8003-19-8			100			
1,1-Dichloropropane	78-99-9			1,000			
1,2-Dichloropropane	78-87-5			1,000	313	U083	
1,3-Dichloropropane	142-28-9			1,000			
Dichloropropene	26952-23-8			100			
1,3-Dichloropropene	542-75-6			100	X	U084	
trans-1,3-Dichloropropene	10061-02-6				313		
2,3-Dichloropropene	78-88-6			100	313		
2,2-Dichloropropionic acid	75-99-0			5,000			
1,3-Dichloropropylene	542-75-6			100	313	U084	
Dichlorosilane	4109-96-0						10,000
Dichlorotetrafluoroethane	76-14-2				313		
Dichlorotrifluoroethane	34077-87-7				313		
Dichloro-1,1,2-trifluoroethane	90454-18-5				313		
1,1-Dichloro-1,2,2-trifluoroethane	812-04-4				313		
1,2-Dichloro-1,1,2-trifluoroethane	354-23-4				313		
2,2-Dichloro-1,1,1-trifluoroethane	306-83-2				313		
Dichlorvos	62-73-7	1,000	10	10	313		
Diclofop methyl	51338-27-3				313		
Dicofol	115-32-2			10	313		
Dicrotophos	141-66-2	100	100				
Dicyclopentadiene	77-73-6				313		
Dieldrin	60-57-1			1		P037	
Diepoxybutane	1464-53-5	500	10	10	313	U085	
Diethanolamine	111-42-2			100	313		
Diethatyl ethyl	38727-55-8				313		
Diethylamine	109-89-7			100			
O-(2-(Diethylamino)-6-methyl-4-pyrimidinyl)-O,O-dimethyl phosphorothioate	29232-93-7				X		
N,N-Diethylaniline	91-66-7			1,000			
Diethylarsine	692-42-2			1		P038	
Diethyl chlorophosphate	814-49-3	500	500				
Diethyldiisocyanatobenzene	134190-37-7				313#		
Di(2-ethylhexyl) phthalate	117-81-7			100	313	U028	
O,O-Diethyl S-methyl dithiophosphate	3288-58-2			5,000		U087	
Diethyl-p-nitrophenyl phosphate	311-45-5			100		P041	
Diethyl phthalate	84-66-2			1,000		U088	
O,O-Diethyl O-pyrazinyl phosphorothioate	297-97-2	500	100	100		P040	

NAME	CAS/313 Category Codes	Section 302 (EHS) TPQ	Section 304 EHS RQ	CERCLA RQ	Section 313	RCRA CODE	CAA 112(r) TQ
Diethylstilbestrol	56-53-1			1		U089	
Diethyl sulfate	64-67-5			10	313		
Diflubenzuron	35367-38-5				313		
Difluoroethane	75-37-6						10,000
Digitoxin	71-63-6	100/10,000	100				
Diglycidyl ether	2238-07-5	1,000	1,000				
Diglycidyl resorcinol ether	101-90-6				313		
Digoxin	20830-75-5	10/10,000	10				
2,3,-Dihydro-5,6-dimethyl-1,4-dithiin 1,1,4,4-tetraoxide	55290-64-7				X		
5,6-Dihydro-2-methyl-N-phenyl-1,4-oxathiin-3-carboxamide	5234-68-4				X		
Dihydrosafrole	94-58-6			10	313	U090	
Diisocyanates (includes only 20 chemicals)	N120				313		
4,4'-Diisocyanatodiphenyl ether	4128-73-8				313#		
2,4'-Diisocyanatodiphenyl sulfide	75790-87-3				313#		
Diisopropylfluorophosphate	55-91-4	100	100	100		P043	
Dimefox	115-26-4	500	500				
1,4:5,8-Dimethanonaphthalene, 1,2,3,4,10,10-hexachloro-1,4,4a,5,8,8a-hexahydro-(1.alpha.,4.alpha.,4a.beta.,5.alpha.,8.alpha.,8a.beta.)-	309-00-2	500/10,000	1	1	X	P004	
Dimethipin	55290-64-7				313		
Dimethoate	60-51-5	500/10,000	10	10	313	P044	
3,3'-Dimethoxybenzidine	119-90-4			100	313	U091	
3,3'-Dimethoxybenzidine dihydrochloride	20325-40-0				313		
3,3'-Dimethoxybenzidine-4,4'-diisocyanate	91-93-0				313#		
3,3'-Dimethoxybenzidine hydrochloride	111984-09-9				313		
Dimethylamine	124-40-3			1,000	313	U092	10,000
Dimethylamine dicamba	2300-66-5				313		
4-Dimethylaminoazobenzene	60-11-7			10	313	U093	
Dimethylaminoazobenzene	60-11-7			10	X	U093	
N,N-Dimethylaniline	121-69-7			100	313		
7,12-Dimethylbenz[a]anthracene	57-97-6			1	313+	U094	
3,3'-Dimethylbenzidine	119-93-7			10	313	U095	
3,3'-Dimethylbenzidine dihydrochloride	612-82-8				313		
3,3'-Dimethylbenzidine dihydrofluoride	41766-75-0				313		
2,2-Dimethyl-1,3-benzodioxol-4-ol methylcarbamate	22781-23-3			100	X	U278	
Dimethylcarbamyl chloride	79-44-7			1	313	U097	
Dimethyl chlorothiophosphate	2524-03-0	500	500		313		
Dimethyldichlorosilane	75-78-5	500	500				5,000
3,3'-Dimethyl-4,4'-diphenylene diisocyanate	91-97-4				313#		
3,3'-Dimethyldiphenylmethane-4,4'-diisocyanate	139-25-3				313#		

NAME	CAS/313 Category Codes	Section 302 (EHS) TPQ	Section 304 EHS RQ	CERCLA RQ	Section 313	RCRA CODE	CAA 112(r) TQ
N-(5-(1,1-Dimethylethyl)-1,3,4-thiadiazol-2-yl)-N,N'-dimethylurea	34014-18-1				X		
Dimethylformamide	68-12-2			100	X		
N,N-Dimethylformamide	68-12-2			100	313		
1,1-Dimethyl hydrazine	57-14-7	1,000	10	10	313	U098	15,000
Dimethylhydrazine	57-14-7	1,000	10	10	X	U098	15,000
O,O-Dimethyl O-(3-methyl-4-(methylthio) phenyl) ester, phosphorothioic acid	55-38-9				X		
2,2-Dimethyl-3-(2-methyl-1-propenyl)cyclopropanecarboxylic acid (1,3,4,5,6,7-hexahydro-1,3-dioxo-2H-isoindol-2-yl)methyl ester	7696-12-0				X		
2,2-Dimethyl-3-(2-methyl-1-propenyl)cyclopropanecarboxylic acid (3-phenoxyphenyl)methyl ester	26002-80-2				X		
2,4-Dimethylphenol	105-67-9			100	313	U101	
Dimethyl-p-phenylenediamine	99-98-9	10/10,000	10				
Dimethyl phosphorochloridothioate	2524-03-0	500	500		X		
Dimethyl phthalate	131-11-3			5,000	313	U102	
2,2-Dimethylpropane	463-82-1						10,000
Dimethyl sulfate	77-78-1	500	100	100	313	U103	
O,O-Dimethyl-O-(3,5,6-trichloro-2-pyridyl)phosphorothioate	5598-13-0				X		
Dimetilan	644-64-4	500/10,000	1	1		P191	
Dinitrobenzene (mixed isomers)	25154-54-5			100			
m-Dinitrobenzene	99-65-0			100	313		
o-Dinitrobenzene	528-29-0			100	313		
p-Dinitrobenzene	100-25-4			100	313		
Dinitrobutyl phenol	88-85-7	100/10,000	1,000	1,000	313	P020	
4,6-Dinitro-o-cresol	534-52-1	10/10,000	10	10	313	P047	
Dinitrocresol	534-52-1	10/10,000	10	10	X	P047	
4,6-Dinitro-o-cresol and salts	534-52-1			10		P047	
Dinitrophenol	25550-58-7			10			
2,4-Dinitrophenol	51-28-5			10	313	P048	
2,5-Dinitrophenol	329-71-5			10			
2,6-Dinitrophenol	573-56-8			10			
1,6-Dinitropyrene	42397-64-8				313+		
1,8-Dinitropyrene	42397-65-9				313+		
Dinitrotoluene (mixed isomers)	25321-14-6			10	313		
2,4-Dinitrotoluene	121-14-2			10	313	U105	
2,6-Dinitrotoluene	606-20-2			100	313	U106	
3,4-Dinitrotoluene	610-39-9			10			
Dinocap	39300-45-3				313		
Dinoseb	88-85-7	100/10,000	1,000	1,000	X	P020	
Dinoterb	1420-07-1	500/10,000	500				
Di-n-octyl phthalate	117-84-0			5,000		U107	
n-Dioctylphthalate	117-84-0			5,000		U107	
1,4-Dioxane	123-91-1			100	313	U108	
Dioxathion	78-34-2	500	500				
Dioxin and dioxin-like compounds (includes only 17 chemicals)	N150				313		

NAME	CAS/313 Category Codes	Section 302 (EHS) TPQ	Section 304 EHS RQ	CERCLA RQ	Section 313	RCRA CODE	CAA 112(r) TQ
Diphacinone	82-66-6	10/10,000	10				
Diphenamid	957-51-7				313		
Diphenylamine	122-39-4				313		
1,2-Diphenylhydrazine	122-66-7			10	313	U109	
Diphenylhydrazine	N.A.			&			
Diphosphoramide, octamethyl-	152-16-9	100	100	100		P085	
Dipotassium endothall	2164-07-0				313		
Dipropylamine	142-84-7			5,000		U110	
4-(Dipropylamino)-3,5-dinitrobenzenesulfonamide	19044-88-3				X		
Dipropyl isocinchomeronate	136-45-8				313		
Di-n-propylnitrosamine	621-64-7			10	X	U111	
Diquat	85-00-7			1,000			
Diquat	2764-72-9			1,000			
Disodium cyanodithioimidocarbonate	138-93-2				313		
Disulfoton	298-04-4	500	1	1		P039	
Dithiazanine iodide	514-73-8	500/10,000	500				
Dithiobiuret	541-53-7	100/10,000	100	100	X	P049	
2,4-Dithiobiuret	541-53-7	100/10,000	100	100	313	P049	
Diuron	330-54-1			100	313		
Dodecylbenzenesulfonic acid	27176-87-0			1,000			
Dodecylguanidine monoacetate	2439-10-3				X		
Dodine	2439-10-3				313		
2,4-DP	120-36-5				313		
2,4-D sodium salt	2702-72-9				313		
Emetine, dihydrochloride	316-42-7	1/10,000	1				
Endosulfan	115-29-7	10/10,000	1	1		P050	
alpha - Endosulfan	959-98-8			1			
beta - Endosulfan	33213-65-9			1			
Endosulfan and Metabolites	N.A.			&			
Endosulfan sulfate	1031-07-8			1			
Endothall	145-73-3			1,000		P088	
Endothion	2778-04-3	500/10,000	500				
Endrin	72-20-8	500/10,000	1	1		P051	
Endrin aldehyde	7421-93-4			1			
Endrin and Metabolites	N.A.			&			
Epichlorohydrin	106-89-8	1,000	100	100	313	U041	20,000
Epinephrine	51-43-4			1,000		P042	
EPN	2104-64-5	100/10,000	100				
EPTC	759-94-4				X		
Ergocalciferol	50-14-6	1,000/10,000	1,000				
Ergotamine tartrate	379-79-3	500/10,000	500				
Ethanamine	75-04-7			100			10,000
Ethane	74-84-0						10,000
Ethane, chloro-	75-00-3			100	X		10,000
1,2-Ethanediamine	107-15-3	10,000	5,000	5,000			20,000
Ethane, 1,1-difluoro-	75-37-6						10,000
Ethanedinitrile	460-19-5			100		P031	10,000
Ethane, 1,1'-oxybis-	60-29-7			100		U117	10,000
Ethaneperoxoic acid	79-21-0	500	500		X		10,000
Ethanesulfonyl chloride, 2-chloro-	1622-32-8	500	500				
Ethane, 1,1,1,2-tetrachloro-	630-20-6			100	X	U208	

NAME	CAS/313 Category Codes	Section 302 (EHS) TPQ	Section 304 EHS RQ	CERCLA RQ	Section 313	RCRA CODE	CAA 112(r) TQ
Ethane, 1,1'-thiobis[2-chloro-	505-60-2	500	500		X		
Ethanethiol	75-08-1						10,000
Ethane, 1,1,2-trichloro-1,2,2,-trifluoro-	76-13-1				X		
Ethanimidothioic acid, 2-(dimethylamino)-N-hydroxy-2-oxo-, methyl ester	30558-43-1			5,000		U394	
Ethanimidothioic acid, N-[[methylamino)carbonyl]	16752-77-5	500/10,000	100	100		P066	
Ethanol, 1,2-dichloro-, acetate	10140-87-1	1,000	1,000				
Ethanol, 2-ethoxy-	110-80-5			1,000	X	U359	
Ethanol, 2,2'-oxybis-, dicarbamate	5952-26-1			5,000		U395	
Ethene	74-85-1				X		10,000
Ethene, bromotrifluoro-	598-73-2						10,000
Ethene, chloro-	75-01-4			1	X	U043	10,000
Ethene, chlorotrifluoro-	79-38-9						10,000
Ethene, 1,1-dichloro-	75-35-4			100	X	U078	10,000
Ethene, 1,1-difluoro-	75-38-7						10,000
Ethene, ethoxy-	109-92-2						10,000
Ethene, fluoro-	75-02-5						10,000
Ethene, methoxy-	107-25-5						10,000
Ethene, tetrafluoro-	116-14-3						10,000
Ethion	563-12-2	1,000	10	10			
Ethoprop	13194-48-4	1,000	1,000		313		
Ethoprophos	13194-48-4	1,000	1,000		X		
2-Ethoxyethanol	110-80-5			1,000	313	U359	
2-(1-(Ethoxyimino) butyl)-5-(2-(ethylthio)propyl)-3-hydroxyl-2-cyclohexen-1-one	74051-80-2				X		
2-((Ethoxyl((1-methylethyl)amino]phosphinothioyl]oxy) benzoic acid 1-methylethyl ester	25311-71-1				X		
Ethyl acetate	141-78-6			5,000		U112	
Ethyl acetylene	107-00-6						10,000
Ethyl acrylate	140-88-5			1,000	313	U113	
3-((Ethylamino)methoxyphosphinothioyl)oxy)-2-butenoic acid, 1-methylethyl ester	31218-83-4				X		
Ethylbenzene	100-41-4			1,000	313		
Ethylbis(2-chloroethyl)amine	538-07-8	500	500				
Ethyl carbamate	51-79-6			100	X	U238	
Ethyl chloride	75-00-3			100	X		10,000
Ethyl chloroformate	541-41-3				313		
Ethyl-2-(((((4-chloro-6-methoxyprimidin-2-yl)amino)carbonyl)amino)sulfonyl)benzoate	90982-32-4				X		
Ethyl cyanide	107-12-0	500	10	10		P101	10,000
Ethyl dipropylthiocarbamate	759-94-4				313		
Ethylene	74-85-1				313		10,000
Ethylenebisdithiocarbamic acid, salts and esters	N171				313		

NAME	CAS/313 Category Codes	Section 302 (EHS) TPQ	Section 304 EHS RQ	CERCLA RQ	Section 313	RCRA CODE	CAA 112(r) TQ
Ethylenebisdithiocarbamic acid, salts & esters	111-54-6			5,000	X	U114	
Ethylenediamine	107-15-3	10,000	5,000	5,000			20,000
Ethylenediamine-tetraacetic acid (EDTA)	60-00-4			5,000			
Ethylene dibromide	106-93-4			1	X	U067	
Ethylene dichloride	107-06-2			100	X	U077	
Ethylene fluorohydrin	371-62-0	10	10				
Ethylene glycol	107-21-1			5,000	313		
Ethyleneimine	151-56-4	500	1	1	313	P054	10,000
Ethylene oxide	75-21-8	1,000	10	10	313	U115	10,000
Ethylene thiourea	96-45-7			10	313	U116	
Ethyl ether	60-29-7			100		U117	10,000
Ethylidene Dichloride	75-34-3			1,000	313	U076	
Ethyl mercaptan	75-08-1						10,000
Ethyl methacrylate	97-63-2			1,000		U118	
Ethyl methanesulfonate	62-50-0			1		U119	
N-Ethyl-N'-(1-methylethyl)-6-(methylthio)-1,3,5,-triazine-2,4-diamine	834-12-8				X		
O-Ethyl O-(4-(methylthio)phenyl)phosphorodithioic acid S-propyl ester	35400-43-2				X		
Ethyl nitrite	109-95-5						10,000
N-(1-Ethylpropyl)-3,4-dimethyl-2,6-dinitrobenzenamine	40487-42-1				X		
S-(2-(Ethylsulfinyl)ethyl) O,O-dimethyl ester phosphorothioic acid	301-12-2				X		
Ethylthiocyanate	542-90-5	10,000	10,000				
Ethyne	74-86-2						10,000
Famphur	52-85-7			1,000	313	P097	
Fenamiphos	22224-92-6	10/10,000	10				
Fenarimol	60168-88-9				313		
Fenbutatin oxide	13356-08-6				313		
Fenoxaprop ethyl	66441-23-4				313		
Fenoxycarb	72490-01-8				313		
Fenpropathrin	39515-41-8				313		
Fensulfothion	115-90-2	500	500				
Fenthion	55-38-9				313		
Fenvalerate	51630-58-1				313		
Ferbam	14484-64-1				313		
Ferric ammonium citrate	1185-57-5			1,000			
Ferric ammonium oxalate	2944-67-4			1,000			
Ferric ammonium oxalate	55488-87-4			1,000			
Ferric chloride	7705-08-0			1,000			
Ferric fluoride	7783-50-8			100			
Ferric nitrate	10421-48-4			1,000			
Ferric sulfate	10028-22-5			1,000			
Ferrous ammonium sulfate	10045-89-3			1,000			
Ferrous chloride	7758-94-3			100			
Ferrous sulfate	7720-78-7			1,000			
Ferrous sulfate	7782-63-0			1,000			

NAME	CAS/313 Category Codes	Section 302 (EHS) TPQ	Section 304 EHS RQ	CERCLA RQ	Section 313	RCRA CODE	CAA 112(r) TQ
Fine mineral fibers	N.A.			&			
Fluazifop butyl	69806-50-4				313		
Fluenetil	4301-50-2	100/10,000	100				
Fluometuron	2164-17-2				313		
Fluoranthene	206-44-0			100	X	U120	
Fluorene	86-73-7			5,000			
Fluorine	7782-41-4	500	10	10	313	P056	1,000
Fluoroacetamide	640-19-7	100/10,000	100	100		P057	
Fluoroacetic acid	144-49-0	10/10,000	10				
Fluoroacetic acid, sodium salt	62-74-8	10/10,000	10	10	X	P058	
Fluoroacetyl chloride	359-06-8	10	10				
Fluorouracil	51-21-8	500/10,000	500		313		
5-Fluorouracil	51-21-8	500/10,000	500		X		
Fluvalinate	69409-94-5				313		
Folpet	133-07-3				313		
Fomesafen	72178-02-0				313		
Fonofos	944-22-9	500	500				
Formaldehyde	50-00-0	500	100	100	313	U122	15,000
Formaldehyde cyanohydrin	107-16-4	1,000	1,000				
Formaldehyde (solution)	50-00-0	500	100	100	X	U122	15,000
Formetanate hydrochloride	23422-53-9	500/10,000	100	100		P198	
Formic acid	64-18-6			5,000	313	U123	
Formic acid, methyl ester	107-31-3						10,000
Formothion	2540-82-1	100	100				
Formparanate	17702-57-7	100/10,000	100	100		P197	
Fosthietan	21548-32-3	500	500				
Freon 113	76-13-1				313		
Fuberidazole	3878-19-1	100/10,000	100				
Fumaric acid	110-17-8			5,000			
Furan	110-00-9	500	100	100	313	U124	5,000
Furan, tetrahydro-	109-99-9			1,000		U213	
Furfural	98-01-1			5,000		U125	
Gallium trichloride	13450-90-3	500/10,000	500				
Glycidol	556-52-5				313		
Glycidylaldehyde	765-34-4			10		U126	
Glycol Ethers	N230			&	313		
Guanidine, N-methyl-N'-nitro-N-nitroso-	70-25-7			10		U163	
Guthion	86-50-0	10/10,000	1	1			
Haloethers	N.A.			&			
Halomethanes	N.A.			&			
Halon 1211	353-59-3				X		
Halon 1301	75-63-8				X		
Halon 2402	124-73-2				X		
HCFC-121	354-14-3				X		
HCFC-121a	354-11-0				X		
HCFC-123	306-83-2				X		
HCFC-123a	354-23-4				X		
HCFC-123b	812-04-4				X		
HCFC-124	2837-89-0				X		
HCFC-124a	354-25-6				X		
HCFC-132b	1649-08-7				X		

NAME	CAS/313 Category Codes	Section 302 (EHS) TPQ	Section 304 EHS RQ	CERCLA RQ	Section 313	RCRA CODE	CAA 112(r) TQ
HCFC-133a	75-88-7				X		
HCFC-141b	1717-00-6				X		
HCFC-142b	75-68-3				X		
HCFC-21	75-43-4				X		
HCFC-22	75-45-6				X		
HCFC-225aa	128903-21-9				X		
HCFC-225ba	422-48-0				X		
HCFC-225bb	422-44-6				X		
HCFC-225ca	422-56-0				X		
HCFC-225cb	507-55-1				X		
HCFC-225cc	13474-88-9				X		
HCFC-225da	431-86-7				X		
HCFC-225ea	136013-79-1				X		
HCFC-225eb	111512-56-2				X		
HCFC-253fb	460-35-5				X		
Heptachlor	76-44-8			1	313	P059	
Heptachlor and Metabolites	N.A.			&			
Heptachlor epoxide	1024-57-3			1			
1,2,3,4,6,7,8-heptachlorodibenzo-p-dioxin	35822-46-9				313!		
1,2,3,4,7,8,9-heptachlorodibenzofuran	55673-89-7				313!		
1,2,3,4,6,7,8-heptachlorodibenzofuran	67562-39-4				313!		
1,4,5,6,7,8,8-Heptachloro-3a,4,7,7a-tetrahydro-4,7-methano-1H-indene	76-44-8			1	X	P059	
Hexachlorobenzene	118-74-1			10	313	U127	
Hexachloro-1,3-butadiene	87-68-3			1	313	U128	
Hexachlorobutadiene	87-68-3			1	X	U128	
Hexachlorocyclohexane (all isomers)	608-73-1			&			
alpha-Hexachlorocyclohexane	319-84-6			10	313		
Hexachlorocyclohexane (gamma isomer)	58-89-9	1,000/10,000	1	1	X	U129	
Hexachlorocyclopentadiene	77-47-4	100	10	10	313	U130	
1,2,3,7,8,9-hexachlorodibenzo-p-dioxin	19408-74-3				313!		
1,2,3,4,7,8-hexachlorodibenzo-p-dioxin	39227-28-6				313!		
1,2,3,6,7,8-hexachlorodibenzo-p-dioxin	57653-85-7				313!		
1,2,3,6,7,8-hexachlorodibenzofuran	57117-44-9				313!		
2,3,4,6,7,8-hexachlorodibenzofuran	60851-34-5				313!		
1,2,3,4,7,8-hexachlorodibenzofuran	70648-26-9				313!		
1,2,3,7,8,9-hexachlorodibenzofuran	72918-21-9				313!		
Hexachloroethane	67-72-1			100	313	U131	
Hexachloronaphthalene	1335-87-1				313		
Hexachlorophene	70-30-4			100	313	U132	
Hexachloropropene	1888-71-7			1,000		U243	
Hexaethyl tetraphosphate	757-58-4			100		P062	
Hexakis(2-methyl-2-phenylpropyl)distannoxane	13356-08-6				X		
Hexamethylenediamine, N,N'-dibutyl-	4835-11-4	500	500				
Hexamethylene-1,6-diisocyanate	822-06-0			100	313#		
Hexamethylphosphoramide	680-31-9			1	313		

NAME	CAS/313 Category Codes	Section 302 (EHS) TPQ	Section 304 EHS RQ	CERCLA RQ	Section 313	RCRA CODE	CAA 112(r) TQ
Hexane	110-54-3			5,000	X		
n-Hexane	110-54-3			5,000	313		
Hexazinone	51235-04-2				313		
Hydramethylnon	67485-29-4				313		
Hydrazine	302-01-2	1,000	1	1	313	U133	15,000
Hydrazine, 1,2-diethyl-	1615-80-1			10		U086	
Hydrazine, 1,1-dimethyl-	57-14-7	1,000	10	10	X	U098	15,000
Hydrazine, 1,2-dimethyl-	540-73-8			1		U099	
Hydrazine, 1,2-diphenyl-	122-66-7			10	X	U109	
Hydrazine, methyl-	60-34-4	500	10	10	X	P068	15,000
Hydrazine sulfate	10034-93-2				313		
Hydrazobenzene	122-66-7			10	X	U109	
Hydrochloric acid	7647-01-0			5,000			
Hydrochloric acid (conc 37% or greater)	7647-01-0			5,000			15,000
Hydrochloric acid (aerosol forms only)	7647-01-0			5,000	313		
Hydrocyanic acid	74-90-8	100	10	10	X	P063	2,500
Hydrofluoric acid	7664-39-3	100	100	100	X	U134	
Hydrofluoric acid (conc. 50% or greater)	7664-39-3	100	100	100	X	U134	1,000
Hydrogen	1333-74-0						10,000
Hydrogen chloride (anhydrous)	7647-01-0	500	5,000	5,000	X		5,000
Hydrogen chloride (gas only)	7647-01-0	500	5,000	5,000	X		5,000
Hydrogen cyanide	74-90-8	100	10	10	313	P063	2,500
Hydrogen fluoride	7664-39-3	100	100	100	313	U134	
Hydrogen fluoride (anhydrous)	7664-39-3	100	100	100	X	U134	1,000
Hydrogen peroxide (Conc.> 52%)	7722-84-1	1,000	1,000				
Hydrogen selenide	7783-07-5	10	10		313c		500
Hydrogen sulfide	7783-06-4	500	100	100	313	U135	10,000
Hydroperoxide, 1-methyl-1-phenylethyl-	80-15-9			10	X	U096	
Hydroquinone	123-31-9	500/10,000	100	100	313		
Imazalil	35554-44-0				313		
Indeno(1,2,3-cd)pyrene	193-39-5			100	313+	U137	
3-Iodo-2-propynyl butylcarbamate	55406-53-6				313		
Iron carbonyl (Fe(CO)5), (TB-5-11)-	13463-40-6	100	100		X		2,500
Iron, pentacarbonyl-	13463-40-6	100	100		313		2,500
Isobenzan	297-78-9	100/10,000	100				
Isobutane	75-28-5						10,000
Isobutyl alcohol	78-83-1			5,000		U140	
Isobutyraldehyde	78-84-2				313		
Isobutyronitrile	78-82-0	1,000	1,000				20,000
Isocyanic acid, 3,4-dichlorophenyl ester	102-36-3	500/10,000	500				
Isodrin	465-73-6	100/10,000	1	1	313	P060	
Isofenphos	25311-71-1				313		
Isofluorphate	55-91-4	100	100	100		P043	
1H-Isoindole-1,3(2H)-dione, 3a,4,7,7a-tetrahydro-2-[(trichloromethyl)thio]-	133-06-2			10	X		
Isononylphenol	11066-49-2				313$		
4-Isononylphenol	26543-97-5				313$		

NAME	CAS/313 Category Codes	Section 302 (EHS) TPQ	Section 304 EHS RQ	CERCLA RQ	Section 313	RCRA CODE	CAA 112(r) TQ
Isopentane	78-78-4						10,000
Isophorone	78-59-1			5,000			
Isophorone diisocyanate	4098-71-9	500	500		313#		
Isoprene	78-79-5			100	313		10,000
Isopropanolamine dodecylbenzene sulfonate	42504-46-1			1,000			
Isopropyl alcohol (mfg-strong acid process)	67-63-0				313		
Isopropylamine	75-31-0						10,000
Isopropyl chloride	75-29-6						10,000
Isopropyl chloroformate	108-23-6	1,000	1,000				15,000
4,4'-Isopropylidenediphenol	80-05-7				313		
Isopropylmethylpyrazolyl dimethylcarbamate	119-38-0	500	100	100		P192	
Isosafrole	120-58-1			100	313	U141	
Isothiocyanatomethane	556-61-6	500	500		X		
Kepone	143-50-0			1		U142	
Lactofen	77501-63-4				313		
Lactonitrile	78-97-7	1,000	1,000				
Lasiocarpine	303-34-4			10		U143	
Lead	7439-92-1			10	313		
Lead acetate	301-04-2			10	313c	U144	
Lead arsenate	7645-25-2			1	313c		
Lead arsenate	7784-40-9			1	313c		
Lead arsenate	10102-48-4			1	313c		
Lead chloride	7758-95-4			10	313c		
Lead Compounds	N420			&	313		
Lead fluoborate	13814-96-5			10	313c		
Lead fluoride	7783-46-2			10	313c		
Lead iodide	10101-63-0			10	313c		
Lead nitrate	10099-74-8			10	313c		
Lead phosphate	7446-27-7			10	313c	U145	
Lead stearate	1072-35-1			10	313c		
Lead stearate	7428-48-0			10	313c		
Lead stearate	52652-59-2			10	313c		
Lead stearate	56189-09-4			10	313c		
Lead subacetate	1335-32-6			10	313c	U146	
Lead sulfate	7446-14-2			10	313c		
Lead sulfate	15739-80-7			10	313c		
Lead sulfide	1314-87-0			10	313c		
Lead thiocyanate	592-87-0			10	313c		
Leptophos	21609-90-5	500/10,000	500				
Lewisite	541-25-3	10	10				
Lindane	58-89-9	1,000/10,000	1	1	313	U129	
Linuron	330-55-2				313		
Lithium carbonate	554-13-2				313		
Lithium chromate	14307-35-8			10	313c		
Lithium hydride	7580-67-8	100	100				
Malathion	121-75-5			100	313		
Maleic acid	110-16-7			5,000			
Maleic anhydride	108-31-6			5,000	313	U147	
Maleic hydrazide	123-33-1			5,000		U148	

NAME	CAS/313 Category Codes	Section 302 (EHS) TPQ	Section 304 EHS RQ	CERCLA RQ	Section 313	RCRA CODE	CAA 112(r) TQ
Malononitrile	109-77-3	500/10,000	1,000	1,000	313	U149	
Maneb	12427-38-2				313		
Manganese	7439-96-5				313		
Manganese, bis(dimethylcarbamodithioato-S,S')-	15339-36-3			10	313c	P196	
Manganese Compounds	N450			&	313		
Manganese, tricarbonyl methylcyclopentadienyl	12108-13-3	100	100		313c		
MBOCA	101-14-4			10	X	U158	
MBT	149-30-4				X		
MCPA	94-74-6				X		
MDI	101-68-8			5,000	X		
Mechlorethamine	51-75-2	10	10		X		
Mecoprop	93-65-2				313		
Melphalan	148-82-3			1		U150	
Mephosfolan	950-10-7	500	500				
2-Mercaptobenzothiazole	149-30-4				313		
Mercaptodimethur	2032-65-7	500/10,000	10	10	X	P199	
Mercuric acetate	1600-27-7	500/10,000	500		313c		
Mercuric chloride	7487-94-7	500/10,000	500		313c		
Mercuric cyanide	592-04-1			1	313c		
Mercuric nitrate	10045-94-0			10	313c		
Mercuric oxide	21908-53-2	500/10,000	500		313c		
Mercuric sulfate	7783-35-9			10	313c		
Mercuric thiocyanate	592-85-8			10	313c		
Mercurous nitrate	7782-86-7			10	313c		
Mercurous nitrate	10415-75-5			10	313c		
Mercury	7439-97-6			1	313	U151	
Mercury Compounds	N458			&	313		
Mercury fulminate	628-86-4			10	313c	P065	
Merphos	150-50-5				313		
Methacrolein diacetate	10476-95-6	1,000	1,000				
Methacrylic anhydride	760-93-0	500	500				
Methacrylonitrile	126-98-7	500	1,000	1,000	313	U152	10,000
Methacryloyl chloride	920-46-7	100	100				
Methacryloyloxyethyl isocyanate	30674-80-7	100	100				
Methamidophos	10265-92-6	100/10,000	100				
Metham sodium	137-42-8				313		
Methanamine	74-89-5			100			10,000
Methanamine, N,N-dimethyl-	75-50-3			100			10,000
Methanamine, N-methyl-	124-40-3			1,000	X	U092	10,000
Methanamine, N-methyl-N-nitroso-	62-75-9	1,000	10	10	X	P082	
Methane	74-82-8						10,000
Methane, chloro-	74-87-3			100	X	U045	10,000
Methane, chloromethoxy-	107-30-2	100	10	10	X	U046	5,000
Methane, isocyanato-	624-83-9	500	10	10	X	P064	10,000
Methane, oxybis-	115-10-6						10,000
Methane, oxybis[chloro-	542-88-1	100	10	10	X	P016	1,000
Methanesulfenyl chloride, trichloro-	594-42-3	500	100	100	X		10,000
Methanesulfonyl fluoride	558-25-8	1,000	1,000				
Methane, tetranitro-	509-14-8	500	10	10		P112	10,000
Methanethiol	74-93-1	500	100	100	X	U153	10,000

NAME	CAS/313 Category Codes	Section 302 (EHS) TPQ	Section 304 EHS RQ	CERCLA RQ	Section 313	RCRA CODE	CAA 112(r) TQ
Methane, trichloro-	67-66-3	10,000	10	10	X	U044	20,000
4,7-Methanoindan, 1,2,3,4,5,6,7,8,8-octachloro-2,3,3a,4,7,7a-hexahydro-	57-74-9	1,000	1	1	X	U036	
Methanol	67-56-1			5,000	313	U154	
Methapyrilene	91-80-5			5,000		U155	
Methazole	20354-26-1				313		
Methidathion	950-37-8	500/10,000	500				
Methiocarb	2032-65-7	500/10,000	10	10	313	P199	
Methomyl	16752-77-5	500/10,000	100	100		P066	
Methoxone	94-74-6				313		
Methoxone sodium salt	3653-48-3				313		
Methoxychlor	72-43-5			1	313	U247	
2-Methoxyethanol	109-86-4				313		
Methoxyethylmercuric acetate	151-38-2	500/10,000	500		313c		
2-(4-Methoxy-6-methyl-1,3,5-triazin-2-yl)-methylamino)carbonyl)amino)sulfonyl) benzoic acid, methyl ester	101200-48-0				X		
Methyl acrylate	96-33-3				313		
Methyl bromide	74-83-9	1,000	1,000	1,000	X	U029	
2-Methyl-1-butene	563-46-2						10,000
3-Methyl-1-butene	563-45-1						10,000
Methyl chloride	74-87-3			100	X	U045	10,000
Methyl 2-chloroacrylate	80-63-7	500	500				
Methyl chlorocarbonate	79-22-1	500	1,000	1,000	313	U156	5,000
Methyl chloroform	71-55-6			1,000	X	U226	
Methyl chloroformate	79-22-1	500	1,000	1,000	X	U156	5,000
3-Methylcholanthrene	56-49-5			10	313+	U157	
5-Methylchrysene	3697-24-3				313+		
4-Methyldiphenylmethane-3,4-diisocyanate	75790-84-0				313#		
6-Methyl-1,3-dithiolo[4,5-b]quinoxalin-2-one	2439-01-2				X		
4,4'-Methylenebis(2-chloroaniline)	101-14-4			10	313	U158	
2,2'-Methylenebis(4-chlorophenol	97-23-4				X		
4,4'-Methylenebis(N,N-dimethyl)benzenamine	101-61-1				313		
1,1'-Methylene bis(4-isocyanatocyclohexane)	5124-30-1				313#		
Methylenebis(phenylisocyanate)	101-68-8			5,000	313#		
Methylene bromide	74-95-3			1,000	313	U068	
Methylene chloride	75-09-2			1,000	X	U080	
4,4'-Methylenedianiline	101-77-9			10	313		
Methyl ether	115-10-6						10,000
Methyl ethyl ketone	78-93-3			5,000		U159	
Methyl ethyl ketone peroxide	1338-23-4			10		U160	
Methyleugenol	93-15-2				313		
Methyl formate	107-31-3						10,000
Methyl hydrazine	60-34-4	500	10	10	313	P068	15,000
Methyl iodide	74-88-4			100	313	U138	
Methyl isobutyl ketone	108-10-1			5,000	313	U161	
Methyl isocyanate	624-83-9	500	10	10	313	P064	10,000

NAME	CAS/313 Category Codes	Section 302 (EHS) TPQ	Section 304 EHS RQ	CERCLA RQ	Section 313	RCRA CODE	CAA 112(r) TQ
Methyl isothiocyanate	556-61-6	500	500		313		
2-Methyllactonitrile	75-86-5	1,000	10	10	313	P069	
Methyl mercaptan	74-93-1	500	100	100	313s	U153	10,000
Methylmercuric dicyanamide	502-39-6	500/10,000	500		313c		
Methyl methacrylate	80-62-6			1,000	313	U162	
N-Methylolacrylamide	924-42-5				313		
Methyl parathion	298-00-0	100/10,000	100	100	313	P071	
Methyl phenkapton	3735-23-7	500	500				
Methyl phosphonic dichloride	676-97-1	100	100				
2-Methylpropene	115-11-7						10,000
2-Methylpyridine	109-06-8			5,000	313	U191	
N-Methyl-2-pyrrolidone	872-50-4				313		
Methyl tert-butyl ether	1634-04-4			1,000	313		
Methyl thiocyanate	556-64-9	10,000	10,000				20,000
Methylthiouracil	56-04-2			10		U164	
Methyltrichlorosilane	75-79-6	500	500				5,000
Methyl vinyl ketone	78-94-4	10	10				
Metiram	9006-42-2				313		
Metolcarb	1129-41-5	100/10,000	1,000	1,000		P190	
Metribuzin	21087-64-9				313		
Mevinphos	7786-34-7	500	10	10	313		
Mexacarbate	315-18-4	500/10,000	1,000	1,000		P128	
Michler's ketone	90-94-8				313		
Mitomycin C	50-07-7	500/10,000	10	10		U010	
Molinate	2212-67-1				313		
Molybdenum trioxide	1313-27-5				313		
Monochloropentafluoroethane	76-15-3				313		
Monocrotophos	6923-22-4	10/10,000	10				
Monoethylamine	75-04-7			100			10,000
Monomethylamine	74-89-5			100			10,000
Monuron	150-68-5				313		
Muscimol	2763-96-4	500/10,000	1,000	1,000		P007	
Mustard gas	505-60-2	500	500		313		
Myclobutanil	88671-89-0				313		
Nabam	142-59-6				313		
Naled	300-76-5			10	313		
Naphthalene	91-20-3			100	313	U165	
1,5-Naphthalene diisocyanate	3173-72-6				313#		
1-Naphthalenol, methylcarbamate	63-25-2			100	X	U279	
Naphthenic acid	1338-24-5			100			
1,4-Naphthoquinone	130-15-4			5,000		U166	
alpha-Naphthylamine	134-32-7			100	313	U167	
beta-Naphthylamine	91-59-8			10	313	U168	
Nickel	7440-02-0			100	313		
Nickel ammonium sulfate	15699-18-0			100	313c		
Nickel carbonyl	13463-39-3	1	10	10	313c	P073	1,000
Nickel chloride	7718-54-9			100	313c		
Nickel chloride	37211-05-5			100	313c		
Nickel Compounds	N495			&	313		
Nickel cyanide	557-19-7			10	313c	P074	
Nickel hydroxide	12054-48-7			10	313c		

NAME	CAS/313 Category Codes	Section 302 (EHS) TPQ	Section 304 EHS RQ	CERCLA RQ	Section 313	RCRA CODE	CAA 112(r) TQ
Nickel nitrate	14216-75-2			100	313c		
Nickel sulfate	7786-81-4			100	313c		
Nicotine	54-11-5	100	100	100	313c	P075	
Nicotine and salts	N503				313		
Nicotine and salts	54-11-5			100	313c	P075	
Nicotine sulfate	65-30-5	100/10,000	100	100	313c		
Nitrapyrin	1929-82-4				313		
Nitrate compounds (water dissociable)	N511				313		
Nitric acid	7697-37-2	1,000	1,000	1,000	313		
Nitric acid (conc 80% or greater)	7697-37-2	1,000	1,000	1,000	X		15,000
Nitric oxide	10102-43-9	100	10	10 @		P076	10,000
Nitrilotriacetic acid	139-13-9				313		
p-Nitroaniline	100-01-6			5,000	313	P077	
5-Nitro-o-anisidine	99-59-2				313		
Nitrobenzene	98-95-3	10,000	1,000	1,000	313	U169	
4-Nitrobiphenyl	92-93-3			10	313		
6-Nitrochrysene	7496-02-8				313+		
Nitrocyclohexane	1122-60-7	500	500				
Nitrofen	1836-75-5				313		
Nitrogen dioxide	10102-44-0	100	10	10 @		P078	
Nitrogen dioxide	10544-72-6			10 @			
Nitrogen mustard	51-75-2	10	10		313		
Nitrogen oxide (NO)	10102-43-9	100	10	10 @		P076	10,000
Nitroglycerin	55-63-0			10	313	P081	
Nitromethane	75-52-5				313		
Nitrophenol (mixed isomers)	25154-55-6			100			
2-Nitrophenol	88-75-5			100	313		
4-Nitrophenol	100-02-7			100	313	U170	
m-Nitrophenol	554-84-7			100			
p-Nitrophenol	100-02-7			100	X	U170	
Nitrophenols	N.A.			&			
2-Nitropropane	79-46-9			10	313	U171	
1-Nitropyrene	5522-43-0				313+		
4–Nitropyrene	57835-92-4				313+		
Nitrosamines	N.A.			&			
N-Nitrosodi-n-butylamine	924-16-3			10	313	U172	
N-Nitrosodiethanolamine	1116-54-7			1		U173	
N-Nitrosodiethylamine	55-18-5			1	313	U174	
N-Nitrosodimethylamine	62-75-9	1,000	10	10	313	P082	
Nitrosodimethylamine	62-75-9	1,000	10	10	X	P082	
N-Nitrosodiphenylamine	86-30-6			100	313		
p-Nitrosodiphenylamine	156-10-5				313		
N-Nitrosodi-n-propylamine	621-64-7			10	313	U111	
N-Nitroso-N-ethylurea	759-73-9			1	313	U176	
N-Nitroso-N-methylurea	684-93-5			1	313	U177	
N-Nitroso-N-methylurethane	615-53-2			1		U178	
N-Nitrosomethylvinylamine	4549-40-0			10	313	P084	
N-Nitrosomorpholine	59-89-2			1	313		
N-Nitrosonornicotine	16543-55-8				313		
N-Nitrosopiperidine	100-75-4			10	313	U179	
N-Nitrosopyrrolidine	930-55-2			1		U180	

NAME	CAS/313 Category Codes	Section 302 (EHS) TPQ	Section 304 EHS RQ	CERCLA RQ	Section 313	RCRA CODE	CAA 112(r) TQ
Nitrotoluene	1321-12-6			1,000			
m-Nitrotoluene	99-08-1			1,000			
o-Nitrotoluene	88-72-2			1,000	313		
p-Nitrotoluene	99-99-0			1,000			
5-Nitro-o-toluidine	99-55-8			100	313	U181	
Nitrous acid, ethyl ester	109-95-5						10,000
Nonylphenol (includes only 6 chemicals)	N530				313		
Nonylphenol	25154-52-3				313$		
Nonylphenol, branched	90481-04-2				313$		
4-Nonylphenol	104-40-5				313$		
4-Nonylphenol, branched	84852-15-3				313$		
Norbormide	991-42-4	100/10,000	100				
Norflurazon	27314-13-2				313		
1,2,3,4,6,7,8,9-octachlorodibenzo-p-dioxin	3268-87-9				313!		
1,2,3,4,6,7,8,9-octachlorodibenzofuran	39001-02-0				313!		
Octachloronaphthalene	2234-13-1				313		
Octachlorostyrene	29082-74-4				313		
Octanoic acid, 2,6-dibromo-4-cyanophenyl ester	1689-99-2				X		
Oleum (fuming sulfuric acid)	8014-95-7			1,000			10,000
o-Nitroanisole	91-23-6				313		
Organorhodium Complex (PMN-82-147)	0	10/10,000	10	PMN			
Oryzalin	19044-88-3				313		
Osmium oxide OsO4 (T-4)-	20816-12-0			1,000	X	P087	
Osmium tetroxide	20816-12-0			1,000	313	P087	
Ouabain	630-60-4	100/10,000	100				
7-Oxabicyclo(2.2.1)heptane-2,3-dicarboxylic acid, dipotassium salt	2164-07-0				X		
Oxamyl	23135-22-0	100/10,000	100	100		P194	
Oxetane, 3,3-bis(chloromethyl)-	78-71-7	500	500				
Oxirane	75-21-8	1,000	10	10	X	U115	10,000
Oxirane, (chloromethyl)-	106-89-8	1,000	100	100	X	U041	20,000
Oxirane, methyl-	75-56-9	10,000	100	100	X		10,000
Oxydemeton methyl	301-12-2				313		
Oxydiazon	19666-30-9				313		
Oxydisulfoton	2497-07-6	500	500				
Oxyfluorfen	42874-03-3				313		
Ozone	10028-15-6	100	100		313		
Paraformaldehyde	30525-89-4			1,000			
Paraldehyde	123-63-7			1,000	313	U182	
Paraquat dichloride	1910-42-5	10/10,000	10		313		
Paraquat methosulfate	2074-50-2	10/10,000	10				
Parathion	56-38-2	100	10	10	313	P089	
Parathion-methyl	298-00-0	100/10,000	100	100	X	P071	
Paris green	12002-03-8	500/10,000	1	1			
PCBs	1336-36-3			1	X		
PCNB	82-68-8			100	X	U185	
PCP	87-86-5			10	X		

NAME	CAS/313 Category Codes	Section 302 (EHS) TPQ	Section 304 EHS RQ	CERCLA RQ	Section 313	RCRA CODE	CAA 112(r) TQ
Pebulate	1114-71-2				313		
Pendimethalin	40487-42-1				313		
Pentaborane	19624-22-7	500	500				
Pentachlorobenzene	608-93-5			10	313	U183	
1,2,3,7,8-pentachlorodibenzo-p-dioxin	40321-76-4				313!		
2,3,4,7,8-pentachlorodibenzofuran	57117-31-4				313!		
1,2,3,7,8-pentachlorodibenzofuran	57117-41-6				313!		
Pentachloroethane	76-01-7			10	313	U184	
Pentachloronitrobenzene	82-68-8			100	X	U185	
Pentachlorophenol	87-86-5			10	313		
Pentadecylamine	2570-26-5	100/10,000	100				
1,3-Pentadiene	504-60-9			100		U186	10,000
Pentane	109-66-0						10,000
1-Pentene	109-67-1						10,000
2-Pentene, (E)-	646-04-8						10,000
2-Pentene, (Z)-	627-20-3						10,000
Pentobarbital sodium	57-33-0				313		
Peracetic acid	79-21-0	500	500		313		10,000
Perchloroethylene	127-18-4			100	X	U210	
Perchloromethyl mercaptan	594-42-3	500	100	100	313		10,000
Permethrin	52645-53-1				313		
Phenacetin	62-44-2			100		U187	
Phenanthrene	85-01-8			5,000	313		
Phenol	108-95-2	500/10,000	1,000	1,000	313	U188	
Phenol, 2-(1-methylethoxy)-, methylcarbamate	114-26-1			100	X	U411	
Phenol, 3-(1-methylethyl)-, methylcarbamate	64-00-6	500/10,000	10	10		P202	
Phenolphthalein	77-09-8				313		
Phenol, 2,2'-thiobis[4-chloro-6-methyl-	4418-66-0	100/10,000	100				
Phenothrin	26002-80-2				313		
Phenoxarsine, 10,10'-oxydi-	58-36-6	500/10,000	500				
(2-(4-Phenoxyphenoxy)ethyl carbamic acid ethyl ester	72490-01-8				X		
Phenyl dichloroarsine	696-28-6	500	1	1		P036	
(1,2-Phenylenebis(iminocarbonothioyl)) biscarbamic acid diethyl ester	23564-06-9				X		
1,2-Phenylenediamine	95-54-5				313		
p-Phenylenediamine	106-50-3			5,000	313		
1,3-Phenylenediamine	108-45-2				313		
1,2-Phenylenediamine dihydrochloride	615-28-1				313		
1,4-Phenylenediamine dihydrochloride	624-18-0				313		
1,4-Phenylene diisocyanate	104-49-4				313#		
1,3-Phenylene diisocyanate	123-61-5				313#		
Phenylhydrazine hydrochloride	59-88-1	1,000/10,000	1,000				
Phenylmercuric acetate	62-38-4	500/10,000	100	100	313c	P092	
Phenylmercury acetate	62-38-4	500/10,000	100	100	313c	P092	
5-(Phenylmethyl)-3-furanyl)methyl 2,2-dimethyl-3-(2-methyl-1-propenyl)cyclopropanecarboxylate	10453-86-8				X		
2-Phenylphenol	90-43-7				313		

NAME	CAS/313 Category Codes	Section 302 (EHS) TPQ	Section 304 EHS RQ	CERCLA RQ	Section 313	RCRA CODE	CAA 112(r) TQ
Phenylsilatrane	2097-19-0	100/10,000	100				
Phenylthiourea	103-85-5	100/10,000	100	100		P093	
Phenytoin	57-41-0				313		
Phorate	298-02-2	10	10	10		P094	
Phosacetim	4104-14-7	100/10,000	100				
Phosfolan	947-02-4	100/10,000	100				
Phosgene	75-44-5	10	10	10	313	P095	500
Phosphamidon	13171-21-6	100	100				
Phosphine	7803-51-2	500	100	100	313	P096	5,000
Phosphonic acid, (2,2,2-trichloro-1-hydroxyethyl)-,dimethyl ester	52-68-6			100	X		
Phosphonothioic acid, methyl-, O-ethyl O-(4-(methylthio)phenyl) ester	2703-13-1	500	500				
Phosphonothioic acid, methyl-, S-(2-(bis(1-methylethyl)amino)ethyl) O-ethyl ester	50782-69-9	100	100				
Phosphonothioic acid, methyl-, O-(4-nitrophenyl) O-phenyl ester	2665-30-7	500	500				
Phosphoric acid	7664-38-2			5,000			
Phosphoric acid, 2-chloro-1-(2,3,5-trichlorophenyl) ethenyl dimethyl ester	961-11-5				X		
Phosphoric acid, 2-dichloroethenyl dimethyl ester	62-73-7	1,000	10	10	X		
Phosphoric acid, dimethyl 4-(methylthio) phenyl ester	3254-63-5	500	500				
Phosphorodithioic acid O-ethyl S,S-dipropyl ester	13194-48-4	1,000	1,000		X		
Phosphorothioic acid, O,O-diethyl-O-(4-nitrophenyl) ester	56-38-2	100	10	10	X	P089	
Phosphorothioic acid, O,O-dimethyl-5-(2-(methylthio)ethyl)ester	2587-90-8	500	500				
Phosphorous trichloride	7719-12-2	1,000	1,000	1,000			15,000
Phosphorus (yellow or white)	7723-14-0	100	1	1	313		
Phosphorus	7723-14-0	100	1	1			
Phosphorus oxychloride	10025-87-3	500	1,000	1,000			5,000
Phosphorus pentachloride	10026-13-8	500	500				
Phosphorus trichloride	7719-12-2	1,000	1,000	1,000			15,000
Phosphoryl chloride	10025-87-3	500	1,000	1,000			5,000
Phthalate Esters	N.A.			&			
Phthalic anhydride	85-44-9			5,000	313	U190	
Physostigmine	57-47-6	100/10,000	100	100		P204	
Physostigmine, salicylate (1:1)	57-64-7	100/10,000	100	100		P188	
Picloram	1918-02-1				313		
2-Picoline	109-06-8			5,000	X	U191	
Picric acid	88-89-1				313		
Picrotoxin	124-87-8	500/10,000	500				
N,N'-(1,4-Piperazinediylbis(2,2,2-trichloroethylidene)) bisformamide	26644-46-2				X		
Piperidine	110-89-4	1,000	1,000				15,000
Piperonyl butoxide	51-03-6				313		
Pirimifos-ethyl	23505-41-1	1,000	1,000				
Pirimiphos methyl	29232-93-7				313		

NAME	CAS/313 Category Codes	Section 302 (EHS) TPQ	Section 304 EHS RQ	CERCLA RQ	Section 313	RCRA CODE	CAA 112(r) TQ
Plumbane, tetramethyl-	75-74-1	100	100				10,000
Polybrominated Biphenyls (PBBs)	N575				313		
Polychlorinated alkanes (C10 to C13)	N583				313		
Polychlorinated biphenyls	1336-36-3			1	313		
Polycyclic aromatic compounds (includes only 23 chemicals)	N590				313		
Polycyclic organic matter	N.A.			&			
Polymeric diphenylmethane diisocyanate	9016-87-9				313#		
Polynuclear Aromatic Hydrocarbons	N.A.			&			
Potassium arsenate	7784-41-0			1	313c		
Potassium arsenite	10124-50-2	500/10,000	1	1	313c		
Potassium bichromate	7778-50-9			10	313c		
Potassium bromate	7758-01-2				313		
Potassium chromate	7789-00-6			10	313c		
Potassium cyanide	151-50-8	100	10	10	313c	P098	
Potassium dimethyldithiocarbamate	128-03-0				313		
Potassium hydroxide	1310-58-3			1,000			
Potassium N-methyldithiocarbamate	137-41-7				313		
Potassium permanganate	7722-64-7			100	313c		
Potassium silver cyanide	506-61-6	500	1	1	313c	P099	
Profenofos	41198-08-7				313		
Promecarb	2631-37-0	500/10,000	1,000	1,000		P201	
Prometryn	7287-19-6				313		
Pronamide	23950-58-5			5,000	313	U192	
Propachlor	1918-16-7				313		
1,2-Propadiene	463-49-0						10,000
Propadiene	463-49-0						10,000
2-Propanamine	75-31-0						10,000
Propane	74-98-6						10,000
Propane, 2-chloro-	75-29-6						10,000
Propane 1,2-dichloro-	78-87-5			1,000	X	U083	
Propane, 2,2-dimethyl-	463-82-1						10,000
Propane, 2-methyl	75-28-5						10,000
Propanenitrile	107-12-0	500	10	10		P101	10,000
Propanenitrile, 2-methyl-	78-82-0	1,000	1,000				20,000
Propane sultone	1120-71-4			10	313	U193	
1,3-Propane sultone	1120-71-4			10	X	U193	
Propanil	709-98-8				313		
Propargite	2312-35-8			10	313		
Propargyl alcohol	107-19-7			1,000	313	P102	
Propargyl bromide	106-96-7	10	10				
2-Propenal	107-02-8	500	1	1	X	P003	5,000
2-Propen-1-amine	107-11-9	500	500		X		10,000
Propene	115-07-1				X		10,000
1-Propene	115-07-1				X		10,000
1-Propene, 1-chloro-	590-21-6						10,000
1-Propene, 2-chloro-	557-98-2						10,000
1-Propene, 2-methyl-	115-11-7						10,000
2-Propenenitrile	107-13-1	10,000	100	100	X	U009	20,000
2-Propenenitrile, 2-methyl-	126-98-7	500	1,000	1,000	X	U152	10,000
2-Propen-1-ol	107-18-6	1,000	100	100	X	P005	15,000

NAME	CAS/313 Category Codes	Section 302 (EHS) TPQ	Section 304 EHS RQ	CERCLA RQ	Section 313	RCRA CODE	CAA 112(r) TQ
2-Propenoyl chloride	814-68-6	100	100				5,000
Propetamphos	31218-83-4				313		
Propham	122-42-9			1,000		U373	
Propiconazole	60207-90-1				313		
beta-Propiolactone	57-57-8	500	10	10	313		
Propionaldehyde	123-38-6			1,000	313		
Propionic acid	79-09-4			5,000			
Propionic anhydride	123-62-6			5,000			
Propionitrile	107-12-0	500	10	10		P101	10,000
Propionitrile, 3-chloro-	542-76-7	1,000	1,000	1,000	X	P027	
Propiophenone, 4'-amino	70-69-9	100/10,000	100				
Propoxur	114-26-1			100	313	U411	
n-Propylamine	107-10-8			5,000		U194	
Propyl chloroformate	109-61-5	500	500				15,000
Propylene	115-07-1				313		10,000
Propyleneimine	75-55-8	10,000	1	1	313	P067	10,000
Propylene oxide	75-56-9	10,000	100	100	313		10,000
1-Propyne	74-99-7						10,000
Propyne	74-99-7						10,000
Prothoate	2275-18-5	100/10,000	100				
Pyrene	129-00-0	1,000/10,000	5,000	5,000			
Pyrethrins	121-21-1			1			
Pyrethrins	121-29-9			1			
Pyrethrins	8003-34-7			1			
Pyridine	110-86-1			1,000	313	U196	
Pyridine, 4-amino-	504-24-5	500/10,000	1,000	1,000		P008	
Pyridine, 3-(1-methyl-2-pyrrolidinyl)-,(S)-	54-11-5	100	100	100		P075	
Pyridine, 2-methyl-5-vinyl-	140-76-1	500	500				
Pyridine, 4-nitro-, 1-oxide	1124-33-0	500/10,000	500				
2,4-(1H,3H)-Pyrimidinedione, 5-bromo-6-methyl-3-(1-methylpropyl), lithium salt	53404-19-6				X		
Pyriminil	53558-25-1	100/10,000	100				
Quinoline	91-22-5			5,000	313		
Quinone	106-51-4			10	313	U197	
Quintozene	82-68-8			100	313	U185	
Quizalofop-ethyl	76578-14-8				313		
Reserpine	50-55-5			5,000		U200	
Resmethrin	10453-86-8				313		
Resorcinol	108-46-3			5,000		U201	
Saccharin (manufacturing)	81-07-2			100	313	U202	
Saccharin and salts	81-07-2			100		U202	
Safrole	94-59-7			100	313	U203	
Salcomine	14167-18-1	500/10,000	500				
Sarin	107-44-8	10	10				
Selenious acid	7783-00-8	1,000/10,000	10	10	313c	U204	
Selenious acid, dithallium(1+) salt	12039-52-0			1,000	313c	P114	
Selenium	7782-49-2			100	313		
Selenium Compounds	N725			&	313		
Selenium dioxide	7446-08-4			10	313c		
Selenium oxychloride	7791-23-3	500	500		313c		

NAME	CAS/313 Category Codes	Section 302 (EHS) TPQ	Section 304 EHS RQ	CERCLA RQ	Section 313	RCRA CODE	CAA 112(r) TQ
Selenium sulfide	7488-56-4			10	313c	U205	
Selenourea	630-10-4			1,000		P103	
Semicarbazide hydrochloride	563-41-7	1,000/10,000	1,000				
Sethoxydim	74051-80-2				313		
Silane	7803-62-5						10,000
Silane, (4-aminobutyl)diethoxymethyl-	3037-72-7	1,000	1,000				
Silane, chlorotrimethyl-	75-77-4	1,000	1,000				10,000
Silane, dichloro-	4109-96-0						10,000
Silane, dichlorodimethyl-	75-78-5	500	500				5,000
Silane, tetramethyl-	75-76-3						10,000
Silane, trichloro-	10025-78-2						10,000
Silane, trichloromethyl-	75-79-6	500	500				5,000
Silver	7440-22-4			1,000	313		
Silver Compounds	N740			&	313		
Silver cyanide	506-64-9			1	313c	P104	
Silver nitrate	7761-88-8			1	313c		
Silvex (2,4,5-TP)	93-72-1			100			
Simazine	122-34-9				313		
Sodium	7440-23-5			10			
Sodium arsenate	7631-89-2	1,000/10,000	1	1	313c		
Sodium arsenite	7784-46-5	500/10,000	1	1	313c		
Sodium azide (Na(N3))	26628-22-8	500	1,000	1,000	313	P105	
Sodium bichromate	10588-01-9			10	313c		
Sodium bifluoride	1333-83-1			100			
Sodium bisulfite	7631-90-5			5,000			
Sodium cacodylate	124-65-2	100/10,000	100				
Sodium chromate	7775-11-3			10	313c		
Sodium cyanide (Na(CN))	143-33-9	100	10	10	313c	P106	
Sodium dicamba	1982-69-0				313		
Sodium dimethyldithiocarbamate	128-04-1				313		
Sodium dodecylbenzenesulfonate	25155-30-0			1,000			
Sodium fluoride	7681-49-4			1,000			
Sodium fluoroacetate	62-74-8	10/10,000	10	10	313	P058	
Sodium hydrosulfide	16721-80-5			5,000			
Sodium hydroxide	1310-73-2			1,000			
Sodium hypochlorite	7681-52-9			100			
Sodium hypochlorite	10022-70-5			100			
Sodium methylate	124-41-4			1,000			
Sodium methyldithiocarbamate	137-42-8				X		
Sodium nitrite	7632-00-0			100	313		
Sodium pentachlorophenate	131-52-2				313		
Sodium o-phenylphenoxide	132-27-4				313		
Sodium phosphate, dibasic	7558-79-4			5,000			
Sodium phosphate, dibasic	10039-32-4			5,000			
Sodium phosphate, dibasic	10140-65-5			5,000			
Sodium phosphate, tribasic	7601-54-9			5,000			
Sodium phosphate, tribasic	10101-89-0			5,000			
Sodium phosphate, tribasic	10361-89-4			5,000			
Sodium selenate	13410-01-0	100/10,000	100		313c		
Sodium selenite	7782-82-3			100	313c		
Sodium selenite	10102-18-8	100/10,000	100	100	313c		

NAME	CAS/313 Category Codes	Section 302 (EHS) TPQ	Section 304 EHS RQ	CERCLA RQ	Section 313	RCRA CODE	CAA 112(r) TQ
Sodium tellurite	10102-20-2	500/10,000	500				
Stannane, acetoxytriphenyl-	900-95-8	500/10,000	500				
Streptozotocin	18883-66-4			1		U206	
Strontium chromate	7789-06-2			10	313c		
Strychnine and salts	N746				313		
Strychnine	57-24-9	100/10,000	10	10	313c	P108	
Strychnine, and salts	57-24-9			10	313c	P108	
Strychnine, sulfate	60-41-3	100/10,000	10	10	313c		
Styrene	100-42-5			1,000	313		
Styrene oxide	96-09-3			100	313		
Sulfotep	3689-24-5	500	100	100		P109	
Sulfoxide, 3-chloropropyl octyl	3569-57-1	500	500				
Sulfur dioxide	7446-09-5	500	500				
Sulfur dioxide (anhydrous)	7446-09-5	500	500				5,000
Sulfur fluoride (SF4), (T-4)-	7783-60-0	100	100				2,500
Sulfuric acid (aerosol forms only)	7664-93-9	1,000	1,000	1,000	313		
Sulfuric acid	7664-93-9	1,000	1,000	1,000			
Sulfuric acid (fuming)	8014-95-7			1,000			10,000
Sulfuric acid, mixture with sulfur trioxide	8014-95-7			1,000			10,000
Sulfur monochloride	[1]12771-08-3			1,000			
Sulfur monochloride	[2]10025-67-9			1,000			
Sulfur phosphide	1314-80-3			100		U189	
Sulfur tetrafluoride	7783-60-0	100	100				2,500
Sulfur trioxide	7446-11-9	100	100				10,000
Sulfuryl fluoride	2699-79-8				313		
Sulprofos	35400-43-2				313		
2,4,5-T acid	93-76-5			1,000			
2,4,5-T amines	1319-72-8			5,000			
2,4,5-T amines	2008-46-0			5,000			
2,4,5-T amines	3813-14-7			5,000			
2,4,5-T amines	6369-96-6			5,000			
2,4,5-T amines	6369-97-7			5,000			
2,4,5-T esters	93-79-8			1,000			
2,4,5-T esters	1928-47-8			1,000			
2,4,5-T esters	2545-59-7			1,000			
2,4,5-T esters	25168-15-4			1,000			
2,4,5-T esters	61792-07-2			1,000			
2,4,5-T salts	13560-99-1			1,000			
Tabun	77-81-6	10	10				
Tebuthiuron	34014-18-1				313		
Tellurium hexafluoride	7783-80-4	100	100				
Temephos	3383-96-8				313		
TEPP	107-49-3	100	10	10		P111	
Terbacil	5902-51-2				313		
Terbufos	13071-79-9	100	100				
Tetrabromobisphenol A	79-94-7				313		

[1] CAS Number should be 10025-67-9. See Introduction for further explanation.

[2] This is correct CAS number but not the same CAS number used on the CERCLA list. See Introduction for further explanation.

NAME	CAS/313 Category Codes	Section 302 (EHS) TPQ	Section 304 EHS RQ	CERCLA RQ	Section 313	RCRA CODE	CAA 112(r) TQ
1,2,4,5-Tetrachlorobenzene	95-94-3			5,000		U207	
2,3,7,8-tetrachlorodibenzofuran	51207-31-9				313!		
2,3,7,8-Tetrachlorodibenzo-p-dioxin (TCDD)	1746-01-6			1	313!		
1,1,2,2-Tetrachloroethane	79-34-5			100	313	U209	
1,1,1,2-Tetrachloroethane	630-20-6			100	313	U208	
Tetrachloroethylene	127-18-4			100	313	U210	
1,1,2,2-Tetrachloro-1-fluoroethane	354-14-3				313		
1,1,1,2-Tetrachloro-2-fluoroethane	354-11-0				313		
2,3,4,6-Tetrachlorophenol	58-90-2			10	313c		
Tetrachlorvinphos	961-11-5				313		
Tetracycline hydrochloride	64-75-5				313		
Tetraethyldithiopyrophosphate	3689-24-5	500	100	100		P109	
Tetraethyl lead	78-00-2	100	10	10	313c	P110	
Tetraethyl pyrophosphate	107-49-3	100	10	10		P111	
Tetraethyltin	597-64-8	100	100				
Tetrafluoroethylene	116-14-3				313		10,000
Tetrahydro-5,5-dimethyl-2(1H)-pyrimidinone(3-(4-(trifluoromethyl)phenyl)-1-(2-(4-(trifluoromethyl)phenyl)ethenyl)-2-propenylidene)hydrazone	67485-29-4				X		
Tetrahydro-3,5-dimethyl-2H-1,3,5-thiadiazine-2-thione	533-74-4				X		
Tetrahydro-3,5-dimethyl-2H-1,3,5-thiadiazine-2-thione, ion(1-), sodium	53404-60-7				X		
Tetramethrin	7696-12-0				313		
2,2,3,3-Tetramethylcyclopropane carboxylic acid cyano(3-phenoxyphenyl)methyl ester	39515-41-8				X		
Tetramethyllead	75-74-1	100	100		313c		10,000
Tetramethylsilane	75-76-3						10,000
Tetranitromethane	509-14-8	500	10	10	313	P112	10,000
Thallic oxide	1314-32-5			100	313c	P113	
Thallium	7440-28-0			1,000	313		
Thallium(I) acetate	563-68-8			100	313c	U214	
Thallium(I) carbonate	6533-73-9	100/10,000	100	100	313c	U215	
Thallium chloride TlCl	7791-12-0	100/10,000	100	100	313c	U216	
Thallium Compounds	N760			&	313		
Thallium(I) nitrate	10102-45-1			100	313c	U217	
Thallium(I) sulfate	7446-18-6	100/10,000	100	100	313c	P115	
Thallium sulfate	10031-59-1	100/10,000	100	100	313c		
Thallous carbonate	6533-73-9	100/10,000	100	100	313c	U215	
Thallous chloride	7791-12-0	100/10,000	100	100	313c	U216	
Thallous malonate	2757-18-8	100/10,000	100				
Thallous sulfate	7446-18-6	100/10,000	100	100	313c	P115	
Thiabendazole	148-79-8				313		
2-(4-Thiazolyl)-1H-benzimidazole	148-79-8				X		
Thioacetamide	62-55-5			10	313	U218	
Thiobencarb	28249-77-6				313		
Thiocarbazide	2231-57-4	1,000/10,000	1,000				
Thiocyanic acid, methyl ester	556-64-9	10,000	10,000				20,000

NAME	CAS/313 Category Codes	Section 302 (EHS) TPQ	Section 304 EHS RQ	CERCLA RQ	Section 313	RCRA CODE	CAA 112(r) TQ
4,4'-Thiodianiline	139-65-1				313		
Thiodicarb	59669-26-0			100	313	U410	
Thiofanox	39196-18-4	100/10,000	100	100		P045	
Thiomethanol	74-93-1	500	100	100	X	U153	10,000
Thionazin	297-97-2	500	100	100		P040	
Thiophanate ethyl	23564-06-9				313		
Thiophanate-methyl	23564-05-8			10	313	U409	
Thiophenol	108-98-5	500	100	100		P014	
Thiosemicarbazide	79-19-6	100/10,000	100	100	313	P116	
Thiourea	62-56-6			10	313	U219	
Thiourea, (2-chlorophenyl)-	5344-82-1	100/10,000	100	100		P026	
Thiourea, (2-methylphenyl)-	614-78-8	500/10,000	500				
Thiourea, 1-naphthalenyl-	86-88-4	500/10,000	100	100		P072	
Thiram	137-26-8			10	313	U244	
Thorium dioxide	1314-20-1				313		
Titanium chloride (TiCl4) (T-4)-	7550-45-0	100	1,000	1,000	X		2,500
Titanium tetrachloride	7550-45-0	100	1,000	1,000	313		2,500
o-Tolidine	119-93-7			10	X	U095	
o-Tolidine dihydrochloride	612-82-8				X		
o-Tolidine dihydrofluoride	41766-75-0				X		
Toluene	108-88-3			1,000	313	U220	
Toluenediamine	25376-45-8			10	X	U221	
Toluene-2,4-diisocyanate	584-84-9	500	100	100	313		10,000
Toluene-2,6-diisocyanate	91-08-7	100	100	100	313		10,000
Toluenediisocyanate (mixed isomers)	26471-62-5			100	313	U223	10,000
Toluene diisocyanate (unspecified isomer)	26471-62-5			100	X	U223	10,000
o-Toluidine	95-53-4			100	313	U328	
p-Toluidine	106-49-0			100		U353	
o-Toluidine hydrochloride	636-21-5			100	313	U222	
Toxaphene	8001-35-2	500/10,000	1	1	313	P123	
2,4,5-TP esters	32534-95-5			100			
Triadimefon	43121-43-3				313		
Triallate	2303-17-5			100	313	U389	
Triamiphos	1031-47-6	500/10,000	500				
Triaziquone	68-76-8				313		
Triazofos	24017-47-8	500	500				
Tribenuron methyl	101200-48-0				313		
Tribromomethane	75-25-2			100	X	U225	
Tributyltin fluoride	1983-10-4				313		
Tributyltin methacrylate	2155-70-6				313		
S,S,S-Tributyltrithiophosphate	78-48-8				313		
Trichlorfon	52-68-6			100	313		
Trichloroacetyl chloride	76-02-8	500	500		313		
1,2,4-Trichlorobenzene	120-82-1			100	313		
Trichloro(chloromethyl)silane	1558-25-4	100	100				
Trichloro(dichlorophenyl)silane	27137-85-5	500	500				
1,1,1-Trichloroethane	71-55-6			1,000	313	U226	
1,1,2-Trichloroethane	79-00-5			100	313	U227	
Trichloroethylene	79-01-6			100	313	U228	
Trichloroethylsilane	115-21-9	500	500				
Trichlorofluoromethane	75-69-4			5,000	313	U121	

NAME	CAS/313 Category Codes	Section 302 (EHS) TPQ	Section 304 EHS RQ	CERCLA RQ	Section 313	RCRA CODE	CAA 112(r) TQ
Trichloromethanesulfenyl chloride	594-42-3	500	100	100	X		10,000
Trichloromonofluoromethane	75-69-4			5,000	X	U121	
Trichloronate	327-98-0	500	500				
Trichlorophenol	25167-82-2			10	313c		
2,3,4-Trichlorophenol	15950-66-0			10	313c		
2,3,5-Trichlorophenol	933-78-8			10	313c		
2,3,6-Trichlorophenol	933-75-5			10	313c		
2,4,5-Trichlorophenol	95-95-4			10	313		
2,4,6-Trichlorophenol	88-06-2			10	313		
3,4,5-Trichlorophenol	609-19-8			10			
Trichlorophenylsilane	98-13-5	500	500				
1,2,3-Trichloropropane	96-18-4				313		
Trichlorosilane	10025-78-2						10,000
Triclopyr triethylammonium salt	57213-69-1				313		
Triethanolamine dodecylbenzene sulfonate	27323-41-7			1,000			
Triethoxysilane	998-30-1	500	500				
Triethylamine	121-44-8			5,000	313	U404	
Trifluorochloroethylene	79-38-9						10,000
2-(4-((5-(Trifluoromethyl)-2-pyridinyl)oxy)-phenoxy)propanoic acid, butyl ester	69806-50-4				X		
Trifluralin	1582-09-8			10	313		
Triforine	26644-46-2				313		
Trimethylamine	75-50-3			100			10,000
1,2,4-Trimethylbenzene	95-63-6				313		
Trimethylchlorosilane	75-77-4	1,000	1,000				10,000
2,4,4-Trimethylhexamethylene diisocyanate	15646-96-5				313#		
2,2,4-Trimethylhexamethylene diisocyanate	16938-22-0				313#		
Trimethylolpropane phosphite	824-11-3	100/10,000	100				
2,2,4-Trimethylpentane	540-84-1			1,000			
2,3,5-Trimethylphenyl methylcarbamate	2655-15-4				313		
Trimethyltin chloride	1066-45-1	500/10,000	500				
1,3,5-Trinitrobenzene	99-35-4			10		U234	
Triphenyltin chloride	639-58-7	500/10,000	500		313		
Triphenyltin hydroxide	76-87-9				313		
Tris(2-chloroethyl)amine	555-77-1	100	100				
Tris(2,3-dibromopropyl) phosphate	126-72-7			10	313	U235	
Tris(dimethylcarbamodithioato-S,S')iron	14484-64-1				X		
Trypan blue	72-57-1			10	313	U236	
Uracil mustard	66-75-1			10		U237	
Uranyl acetate	541-09-3			100			
Uranyl nitrate	10102-06-4			100			
Uranyl nitrate	36478-76-9			100			
Urea, N,N-dimethyl-N'-[3-(trifluoromethyl)phenyl]-	2164-17-2				X		
Urethane	51-79-6			100	313	U238	
Valinomycin	2001-95-8	1,000/10,000	1,000				

NAME	CAS/313 Category Codes	Section 302 (EHS) TPQ	Section 304 EHS RQ	CERCLA RQ	Section 313	RCRA CODE	CAA 112(r) TQ
Vanadium (except when contained in an alloy)	7440-62-2				313		
Vanadium Compounds	N770				313		
Vanadium pentoxide	1314-62-1	100/10,000	1,000	1,000	313c	P120	
Vanadyl sulfate	27774-13-6			1,000	313c		
Vikane	2699-79-8				X		
Vinclozolin	50471-44-8				313		
Vinyl acetate	108-05-4	1,000	5,000	5,000	313		15,000
Vinyl acetate monomer	108-05-4	1,000	5,000	5,000	X		15,000
Vinyl acetylene	689-97-4						10,000
Vinyl bromide	593-60-2			100	313		
Vinyl chloride	75-01-4			1	313	U043	10,000
Vinyl ethyl ether	109-92-2						10,000
Vinyl fluoride	75-02-5				313		10,000
Vinylidene chloride	75-35-4			100	313	U078	10,000
Vinylidene fluoride	75-38-7						10,000
Vinyl methyl ether	107-25-5						10,000
Warfarin	81-81-2	500/10,000	100	100	X 313c	P001	
Warfarin and salts	N874				313		
Warfarin, & salts, conc.>0.3%	81-81-2			100	X 313c	P001	
Warfarin sodium	129-06-6	100/10,000	100	100	313c		
m-Xylene	108-38-3			1,000	313	U239	
o-Xylene	95-47-6			1,000	313	U239	
p-Xylene	106-42-3			100	313	U239	
Xylene (mixed isomers)	1330-20-7			100	313	U239	
Xylenol	1300-71-6			1,000			
2,6-Xylidine	87-62-7				313		
Xylylene dichloride	28347-13-9	100/10,000	100				
Zinc (fume or dust)	7440-66-6			1,000	313		
Zinc	7440-66-6			1,000			
Zinc acetate	557-34-6			1,000	313c		
Zinc ammonium chloride	14639-97-5			1,000	313c		
Zinc ammonium chloride	14639-98-6			1,000	313c		
Zinc ammonium chloride	52628-25-8			1,000	313c		
Zinc borate	1332-07-6			1,000	313c		
Zinc bromide	7699-45-8			1,000	313c		
Zinc carbonate	3486-35-9			1,000	313c		
Zinc chloride	7646-85-7			1,000	313c		
Zinc Compounds	N982			&	313		
Zinc cyanide	557-21-1			10	313c	P121	
Zinc, dichloro(4,4-dimethyl-5((((methylamino)carbonyl)oxy)imino) pentanenitrile)-, (T-4)-	58270-08-9	100/10,000	100		313c		
Zinc fluoride	7783-49-5			1,000	313c		
Zinc formate	557-41-5			1,000	313c		
Zinc hydrosulfite	7779-86-4			1,000	313c		
Zinc nitrate	7779-88-6			1,000	313c		
Zinc phenolsulfonate	127-82-2			5,000	313c		
Zinc phosphide	1314-84-7	500	100	100	313c	P122	
Zinc phosphide (conc. <= 10%)	1314-84-7	500	100	100	313c	U249	
Zinc phosphide (conc. > 10%)	1314-84-7	500	100	100	313c	P122	
Zinc silicofluoride	16871-71-9			5,000	313c		

NAME	CAS/313 Category Codes	Section 302 (EHS) TPQ	Section 304 EHS RQ	CERCLA RQ	Section 313	RCRA CODE	CAA 112(r) TQ
Zinc sulfate	7733-02-0			1,000	313c		
Zineb	12122-67-7				313		
Ziram	137-30-4			10		P205	
Zirconium nitrate	13746-89-9			5,000			
Zirconium potassium fluoride	16923-95-8			1,000			
Zirconium sulfate	14644-61-2			5,000			
Zirconium tetrachloride	10026-11-6			5,000			

APPENDIX B

RADIONUCLIDES LISTED UNDER CERCLA
FOR REFERENCE ONLY, NOT FOR REGULATORY COMPLIANCE
SEE CFR PART 302, TABLE 302.4, APPENDIX B., FOR MORE INFORMATION

Radionuclide Name	Atomic Number	Final RQ Curies (Bq)
Radionuclides@		1&(3.7E 10)
Actinium-224	89	100 (3.7E 12)
Actinium-225	89	1 (3.7E 10)
Actinium-226	89	10 (3.7E 11)
Actinium-227	89	0.001 (3.7E 7)
Actinium-228	89	10 (3.7E 11)
Aluminum-26	13	10 (3.7E 11)
Americium-237	95	1000 (3.7E 13)
Americium-238	95	100 (3.7E 12)
Americium-239	95	100 (3.7E 12)
Americium-240	95	10 (3.7E 11)
Americium-241	95	0.01 (3.7E 8)
Americium-242m	95	0.01 (3.7E 8)
Americium-242	95	100 (3.7E 12)
Americium-243	95	0.01 (3.7E 8)
Americium-244m	95	1000 (3.7E 13)
Americium-244	95	10 (3.7E 11)
Americium-245	95	1000 (3.7E 13)
Americium-246m	95	1000 (3.7E 13)
Americium-246	95	1000 (3.7E 13)
Antimony-115	51	1000 (3.7E 13)
Antimony-116m	51	100 (3.7E 12)
Antimony-116	51	1000 (3.7E 13)
Antimony-117	51	1000 (3.7E 13)
Antimony-118m	51	10 (3.7E 11)
Antimony-119	51	1000 (3.7E 13)
Antimony-120 (16 min)	51	1000 (3.7E 13)
Antimony-120 (5.76 day)	51	10 (3.7E 11)

Radionuclide Name	Atomic Number	Final RQ Curies (Bq)
Antimony-122	51	10 (3.7E 11)
Antimony-124m	51	1000 (3.7E 13)
Antimony-124	51	10 (3.7E 11)
Antimony-125	51	10 (3.7E 11)
Antimony-126m	51	1000 (3.7E 13)
Antimony-126	51	10 (3.7E 11)
Antimony-127	51	10 (3.7E 11)
Antimony-128 (10.4 min)	51	1000 (3.7E 13)
Antimony-128 (9.01 hr)	51	10 (3.7E 11)
Antimony-129	51	100 (3.7E 12)
Antimony-130	51	100 (3.7E 12)
Antimony-131	51	1000 (3.7E 13)
Argon-39	18	1000 (3.7E 13)
Argon-41	18	10 (3.7E 11)
Arsenic-69	33	1000 (3.7E 13)
Arsenic-70	33	100 (3.7E 12)
Arsenic-71	33	100 (3.7E 12)
Arsenic-72	33	10 (3.7E 11)
Arsenic-73	33	100 (3.7E 12)
Arsenic-74	33	10 (3.7E 11)
Arsenic-76	33	100 (3.7E 12)
Arsenic-77	33	1000 (3.7E 13)
Arsenic-78	33	100 (3.7E 12)
Astatine-207	85	100 (3.7E 12)
Astatine-211	85	100 (3.7E 12)
Barium-126	56	1000 (3.7E 13)
Barium-128	56	10 (3.7E 11)
Barium-131m	56	1000 (3.7E 13)

APPENDIX B – RADIONUCLIDES LISTED UNDER CERCLA

Radionuclide Name	Atomic Number	Final RQ Curies (Bq)
Barium-131	56	10 (3.7E 11)
Barium-133m	56	100 (3.7E 12)
Barium-133	56	10 (3.7E 11)
Barium-135m	56	1000 (3.7E 13)
Barium-139	56	1000 (3.7E 13)
Barium-140	56	10 (3.7E 11)
Barium-141	56	1000 (3.7E 13)
Barium-142	56	1000 (3.7E 13)
Berkelium-245	97	100 (3.7E 12)
Berkelium-246	97	10 (3.7E 11)
Berkelium-247	97	0.01 (3.7E 8)
Berkelium-249	97	1 (3.7E 10)
Berkelium-250	97	100 (3.7E 12)
Beryllium-7	4	100 (3.7E 12)
Beryllium-10	4	1 (3.7E 10)
Bismuth-200	83	100 (3.7E 12)
Bismuth-201	83	100 (3.7E 12)
Bismuth-202	83	1000 (3.7E 13)
Bismuth-203	83	10 (3.7E 11)
Bismuth-205	83	10 (3.7E 11)
Bismuth-206	83	10 (3.7E 11)
Bismuth-207	83	10 (3.7E 11)
Bismuth-210m	83	0.1 (3.7E 9)
Bismuth-210	83	10 (3.7E 11)
Bismuth-212	83	100 (3.7E 12)
Bismuth-213	83	100 (3.7E 12)
Bismuth-214	83	100 (3.7E 12)
Bromine-74m	35	100 (3.7E 12)
Bromine-74	35	100 (3.7E 12)
Bromine-75	35	100 (3.7E 12)
Bromine-76	35	10 (3.7E 11)
Bromine-77	35	100 (3.7E 12)

Radionuclide Name	Atomic Number	Final RQ Curies (Bq)
Bromine-80m	35	1000 (3.7E 13)
Bromine-80	35	1000 (3.7E 13)
Bromine-82	35	10 (3.7E 11)
Bromine-83	35	1000 (3.7E 13)
Bromine-84	35	100 (3.7E 12)
Cadmium-104	48	1000 (3.7E 13)
Cadmium-107	48	1000 (3.7E 13)
Cadmium-109	48	1 (3.7E 10)
Cadmium-113m	48	0.1 (3.7E 9)
Cadmium-113	48	0.1 (3.7E 9)
Cadmium-115m	48	10 (3.7E 11)
Cadmium-115	48	100 (3.7E 12)
Cadmium-117m	48	10 (3.7E 11)
Cadmium-117	48	100 (3.7E 12)
Calcium-41	20	10 (3.7E 11)
Calcium-45	20	10 (3.7E 11)
Calcium-47	20	10 (3.7E 11)
Californium-244	98	1000 (3.7E 13)
Californium-246	98	10 (3.7E 11)
Californium-248	98	0.1 (3.7E 9)
Californium-249	98	0.01 (3.7E 8)
Californium-250	98	0.01 (3.7E 8)
Californium-251	98	0.01 (3.7E 8)
Californium-252	98	0.1 (3.7E 9)
Californium-253	98	10 (3.7E 11)
Californium-254	98	0.1 (3.7E 9)
Carbon-11	6	1000 (3.7E 13)
Carbon-14	6	10 (3.7E 11)
Cerium-134	58	10 (3.7E 11)
Cerium-135	58	10 (3.7E 11)
Cerium-137m	58	100 (3.7E 12)
Cerium-137	58	1000 (3.7E 13)

APPENDIX B – RADIONUCLIDES LISTED UNDER CERCLA

Radionuclide Name	Atomic Number	Final RQ Curies (Bq)
Cerium-139	58	100 (3.7E 12)
Cerium-141	58	10 (3.7E 11)
Cerium-143	58	100 (3.7E 12)
Cerium-144	58	1 (3.7E 10)
Cesium-125	55	1000 (3.7E 13)
Cesium-127	55	100 (3.7E 12)
Cesium-129	55	100 (3.7E 12)
Cesium-130	55	1000 (3.7E 13)
Cesium-131	55	1000 (3.7E 13)
Cesium-132	55	10 (3.7E 11)
Cesium-134m	55	1000 (3.7E 13)
Cesium-134	55	1 (3.7E 10)
Cesium-135m	55	100 (3.7E 12)
Cesium-135	55	10 (3.7E 11)
Cesium-136	55	10 (3.7E 11)
Cesium-137	55	1 (3.7E 10)
Cesium-138	55	100 (3.7E 12)
Chlorine-36	17	10 (3.7E 11)
Chlorine-38	17	100 (3.7E 12)
Chlorine-39	17	100 (3.7E 12)
Chromium-48	24	100 (3.7E 12)
Chromium-49	24	1000 (3.7E 13)
Chromium-51	24	1000 (3.7E 13)
Cobalt-55	27	10 (3.7E 11)
Cobalt-56	27	10 (3.7E 11)
Cobalt-57	27	100 (3.7E 12)
Cobalt-58m	27	1000 (3.7E 13)
Cobalt-58	27	10 (3.7E 11)
Cobalt-60m	27	1000 (3.7E 13)
Cobalt-60	27	10 (3.7E 11)
Cobalt-61	27	1000 (3.7E 13)
Cobalt-62m	27	1000 (3.7E 13)

Radionuclide Name	Atomic Number	Final RQ Curies (Bq)
Copper-60	29	100 (3.7E 12)
Copper-61	29	100 (3.7E 12)
Copper-64	29	1000 (3.7E 13)
Copper-67	29	100 (3.7E 12)
Curium-238	96	1000 (3.7E 13)
Curium-240	96	1 (3.7E 10)
Curium-241	96	10 (3.7E 11)
Curium-242	96	1 (3.7E 10)
Curium-243	96	0.01 (3.7E 8)
Curium-244	96	0.01 (3.7E 8)
Curium-245	96	0.01 (3.7E 8)
Curium-246	96	0.01 (3.7E 8)
Curium-247	96	0.01 (3.7E 8)
Curium-248	96	0.001 (3.7E 7)
Curium-249	96	1000 (3.7E 13)
Dysprosium-155	66	100 (3.7E 12)
Dysprosium-157	66	100 (3.7E 12)
Dysprosium-159	66	100 (3.7E 12)
Dysprosium-165	66	1000 (3.7E 13)
Dysprosium-166	66	10 (3.7E 11)
Einsteinium-250	99	10 (3.7E 11)
Einsteinium-251	99	1000 (3.7E 13)
Einsteinium-253	99	10 (3.7E 11)
Einsteinium-254m	99	1 (3.7E 10)
Einsteinium-254	99	0.1 (3.7E 9)
Erbium-161	68	100 (3.7E 12)
Erbium-165	68	1000 (3.7E 13)
Erbium-169	68	100 (3.7E 12)
Erbium-171	68	100 (3.7E 12)
Erbium-172	68	10 (3.7E 11)
Europium-145	63	10 (3.7E 11)
Europium-146	63	10 (3.7E 11)

Radionuclide Name	Atomic Number	Final RQ Curies (Bq)
Europium-147	63	10 (3.7E 11)
Europium-148	63	10 (3.7E 11)
Europium-149	63	100 (3.7E 12)
Europium-150 (12.6 hr)	63	1000 (3.7E 13)
Europium-150 (34.2 yr)	63	10 (3.7E 11)
Europium-152m	63	100 (3.7E 12)
Europium-152	63	10 (3.7E 11)
Europium-154	63	10 (3.7E 11)
Europium-155	63	10 (3.7E 11)
Europium-156	63	10 (3.7E 11)
Europium-157	63	10 (3.7E 11)
Europium-158	63	1000 (3.7E 13)
Fermium-252	100	10 (3.7E 11)
Fermium-253	100	10 (3.7E 11)
Fermium-254	100	100 (3.7E 12)
Fermium-255	100	100 (3.7E 12)
Fermium-257	100	1 (3.7E 10)
Fluorine-18	9	1000 (3.7E 13)
Francium-222	87	100 (3.7E 12)
Francium-223	87	100 (3.7E 12)
Gadolinium-145	64	100 (3.7E 12)
Gadolinium-146	64	10 (3.7E 11)
Gadolinium-147	64	10 (3.7E 11)
Gadolinium-148	64	0.001 (3.7E7)
Gadolinium-149	64	100 (3.7E 12)
Gadolinium-151	64	100 (3.7E 12)
Gadolinium-152	64	0.001 (3.7E 7)
Gadolinium-153	64	10 (3.7E 11)
Gadolinium-159	64	1000 (3.7E 13)
Gallium-65	31	1000 (3.7E 13)
Gallium-66	31	10 (3.7E 11)

Radionuclide Name	Atomic Number	Final RQ Curies (Bq)
Gallium-67	31	100 (3.7E 12)
Gallium-68	31	1000 (3.7E 13)
Gallium-70	31	1000 (3.7E 13)
Gallium-72	31	10 (3.7E 11)
Gallium-73	31	100 (3.7E 12)
Germanium-66	32	100 (3.7E 12)
Germanium-67	32	1000 (3.7E 13)
Germanium-68	32	10 (3.7E 11)
Germanium-69	32	10 (3.7E 11)
Germanium-71	32	1000 (3.7E 13)
Germanium-75	32	1000 (3.7E 13)
Germanium-77	32	10 (3.7E 11)
Germanium-78	32	1000 (3.7E 13)
Gold-193	79	100 (3.7E 12)
Gold-194	79	10 (3.7E 11)
Gold-195	79	100 (3.7E 12)
Gold-198m	79	10 (3.7E 11)
Gold-198	79	100 (3.7E 12)
Gold-199	79	100 (3.7E 12)
Gold-200m	79	10 (3.7E 11)
Gold-200	79	1000 (3.7E 13)
Gold-201	79	1000 (3.7E 13)
Hafnium-170	72	100 (3.7E 12)
Hafnium-172	72	1 (3.7E 10)
Hafnium-173	72	100 (3.7E 12)
Hafnium-175	72	100 (3.7E 12)
Hafnium-177m	72	1000 (3.7E 13)
Hafnium-178m	72	0.1 (3.7E 9)
Hafnium-179m	72	100 (3.7E 12)
Hafnium-180m	72	100 (3.7E 12)
Hafnium-181	72	10 (3.7E 11)
Hafnium-182m	72	100 (3.7E 12)

APPENDIX B – RADIONUCLIDES LISTED UNDER CERCLA

Radionuclide Name	Atomic Number	Final RQ Curies (Bq)
Hafnium-182	72	0.1 (3.7E 9)
Hafnium-183	72	100 (3.7E 12)
Hafnium-184	72	100 (3.7E 12)
Holmium-155	67	1000 (3.7E 13)
Holmium-157	67	1000 (3.7E 13)
Holmium-159	67	1000 (3.7E 13)
Holmium-161	67	1000 (3.7E 13)
Holmium-162m	67	1000 (3.7E 13)
Holmium-162	67	1000 (3.7E 13)
Holmium-164m	67	1000 (3.7E 13)
Holmium-164	67	1000 (3.7E 13)
Holmium-166m	67	1 (3.7E 10)
Holmium-166	67	100 (3.7E 12)
Holmium-167	67	100 (3.7E 12)
Hydrogen-3	1	100 (3.7E 12)
Indium-109	49	100 (3.7E 12)
Indium-110 (69.1 min)	49	100 (3.7E 12)
Indium-110 (4.9 hr)	49	10 (3.7E 11)
Indium-111	49	100 (3.7E 12)
Indium-112	49	1000 (3.7E 13)
Indium-113m	49	1000 (3.7E 13)
Indium-114m	49	10 (3.7E 11)
Indium-115m	49	100 (3.7E 12)
Indium-115	49	0.1 (3.7E 9)
Indium-116m	49	100 (3.7E 12)
Indium-117m	49	100 (3.7E 12)
Indium-117	49	1000 (3.7E 13)
Indium-119m	49	1000 (3.7E 13)
Iodine-120m	53	100 (3.7E 12)
Iodine-120	53	10 (3.7E 11)
Iodine-121	53	100 (3.7E 12)

Radionuclide Name	Atomic Number	Final RQ Curies (Bq)
Iodine-123	53	10 (3.7E 11)
Iodine-124	53	0.1 (3.7E 9)
Iodine-125	53	0.01 (3.7E 8)
Iodine-126	53	0.01 (3.7E 8)
Iodine-128	53	1000 (3.7E 13)
Iodine-129	53	0.001 (3.7E 7)
Iodine-130	53	1 (3.7E 10)
Iodine-131	53	0.01 (3.7E 8)
Iodine-132m	53	10 (3.7E 11)
Iodine-132	53	10 (3.7E 11)
Iodine-133	53	0.1 (3.7E 9)
Iodine-134	53	100 (3.7E 12)
Iodine-135	53	10 (3.7E 11)
Iridium-182	77	1000 (3.7E 13)
Iridium-184	77	100 (3.7E 12)
Iridium-185	77	100 (3.7E 12)
Iridium-186	77	10 (3.7E 11)
Iridium-187	77	100 (3.7E 12)
Iridium-188	77	10 (3.7E 11)
Iridium-189	77	100 (3.7E 12)
Iridium-190m	77	1000 (3.7E 13)
Iridium-190	77	10 (3.7E 11)
Iridium-192m	77	100 (3.7E 12)
Iridium-192	77	10 (3.7E 11)
Iridium-194m	77	10 (3.7E 11)
Iridium-194	77	100 (3.7E 12)
Iridium-195m	77	100 (3.7E 12)
Iridium-195	77	1000 (3.7E 13)
Iron-52	26	100 (3.7E 12)
Iron-55	26	100 (3.7E 12)
Iron-59	26	10 (3.7E 11)
Iron-60	26	0.1 (3.7E 9)

APPENDIX B – RADIONUCLIDES LISTED UNDER CERCLA

Radionuclide Name	Atomic Number	Final RQ Curies (Bq)
Krypton-74	36	10 (3.7E 11)
Krypton-76	36	10 (3.7E 11)
Krypton-77	36	10 (3.7E 11)
Krypton-79	36	100 (3.7E 12)
Krypton-81	36	1000 (3.7E 13)
Krypton-83m	36	1000 (3.7E 13)
Krypton-85m	36	100 (3.7E 12)
Krypton-85	36	1000 (3.7E 13)
Krypton-87	36	10 (3.7E 11)
Krypton-88	36	10 (3.7E 11)
Lanthanum-131	57	1000 (3.7E 13)
Lanthanum-132	57	100 (3.7E 12)
Lanthanum-135	57	1000 (3.7E 13)
Lanthanum-137	57	10 (3.7E 11)
Lanthanum-138	57	1 (3.7E 10)
Lanthanum-140	57	10 (3.7E 11)
Lanthanum-141	57	1000 (3.7E 13)
Lanthanum-142	57	100 (3.7E 12)
Lanthanum-143	57	1000 (3.7E 13)
Lead-195m	82	1000 (3.7E 13)
Lead-198	82	100 (3.7E 12)
Lead-199	82	100 (3.7E 12)
Lead-200	82	100 (3.7E 12)
Lead-201	82	100 (3.7E 12)
Lead-202m	82	10 (3.7E 11)
Lead-202	82	1 (3.7E 10)
Lead-203	82	100 (3.7E 12)
Lead-205	82	100 (3.7E 12)
Lead-209	82	1000 (3.7E 13)
Lead-210	82	0.01 (3.7E 8)
Lead-211	82	100 (3.7E 12)
Lead-212	82	10 (3.7E 11)

Radionuclide Name	Atomic Number	Final RQ Curies (Bq)
Lead-214	82	100 (3.7E 12)
Lutetium-169	71	10 (3.7E 11)
Lutetium-170	71	10 (3.7E 11)
Lutetium-171	71	10 (3.7E 11)
Lutetium-172	71	10 (3.7E 11)
Lutetium-173	71	100 (3.7E 12)
Lutetium-174m	71	10 (3.7E 11)
Lutetium-174	71	10 (3.7E 11)
Lutetium-176m	71	1000 (3.7E 13)
Lutetium-176	71	1 (3.7E 10)
Lutetium-177m	71	10 (3.7E 11)
Lutetium-177	71	100 (3.7E 12)
Lutetium-178m	71	1000 (3.7E 13)
Lutetium-178	71	1000 (3.7E 13)
Lutetium-179	71	1000 (3.7E 13)
Magnesium-28	12	10 (3.7E 11)
Manganese-51	25	1000 (3.7E 13)
Manganese-52m	25	1000 (3.7E 13)
Manganese-52	25	10 (3.7E 11)
Manganese-53	25	1000 (3.7E 13)
Manganese-54	25	10 (3.7E 11)
Manganese-56	25	100 (3.7E 12)
Mendelevium-257	101	100 (3.7E 12)
Mendelevium-258	101	1 (3.7E 10)
Mercury-193m	80	10 (3.7E 11)
Mercury-193	80	100 (3.7E 12)
Mercury-194	80	0.1 (3.7E 9)
Mercury-195m	80	100 (3.7E 12)
Mercury-195	80	100 (3.7E 12)
Mercury-197m	80	1000 (3.7E 13)
Mercury-197	80	1000 (3.7E 13)
Mercury-199m	80	1000 (3.7E 13)

APPENDIX B – RADIONUCLIDES LISTED UNDER CERCLA

Radionuclide Name	Atomic Number	Final RQ Curies (Bq)
Mercury-203	80	10 (3.7E 11)
Molybdenum-90	42	100 (3.7E 12)
Molybdenum-93m	42	10 (3.7E 11)
Molybdenum-93	42	100 (3.7E 12)
Molybdenum-99	42	100 (3.7E 12)
Molybdenum-101	42	1000 (3.7E 13)
Neodymium-136	60	1000 (3.7E 13)
Neodymium-138	60	1000 (3.7E 13)
Neodymium-139m	60	100 (3.7E 12)
Neodymium-139	60	1000 (3.7E 13)
Neodymium-141	60	1000 (3.7E 13)
Neodymium-147	60	10 (3.7E 11)
Neodymium-149	60	100 (3.7E 12)
Neodymium-151	60	1000 (3.7E 13)
Neptunium-232	93	1000 (3.7E 13)
Neptunium-233	93	1000 (3.7E 13)
Neptunium-234	93	10 (3.7E 11)
Neptunium-235	93	1000 (3.7E 13)
Neptunium-236 (1.2 E 5 yr)	93	0.1 (3.7E 9)
Neptunium-236 (22.5 hr)	93	100 (3.7E 12)
Neptunium-237	93	0.01 (3.7E 8)
Neptunium-238	93	10 (3.7E 11)
Neptunium-239	93	100 (3.7E 12)
Neptunium-240	93	100 (3.7E 12)
Nickel-56	28	10 (3.7E 11)
Nickel-57	28	10 (3.7E 11)
Nickel-59	28	100 (3.7E 12)
Nickel-63	28	100 (3.7E 12)
Nickel-65	28	100 (3.7E 12)
Nickel-66	28	10 (3.7E 11)

Radionuclide Name	Atomic Number	Final RQ Curies (Bq)
Niobium-88	41	100 (3.7E 12)
Niobium-89 (66 min)	41	100 (3.7E 12)
Niobium-89 (122 min)	41	100 (3.7E 12)
Niobium-90	41	10 (3.7E 11)
Niobium-93m	41	100 (3.7E 12)
Niobium-94	41	10 (3.7E 11)
Niobium-95m	41	100 (3.7E 12)
Niobium-95	41	10 (3.7E 11)
Niobium-96	41	10 (3.7E 11)
Niobium-97	41	100 (3.7E 12)
Niobium-98	41	1000 (3.7E 13)
Osmium-180	76	1000 (3.7E 13)
Osmium-181	76	100 (3.7E 12)
Osmium-182	76	100 (3.7E 12)
Osmium-185	76	10 (3.7E 11)
Osmium-189m	76	1000 (3.7E 13)
Osmium-191m	76	1000 (3.7E 13)
Osmium-191	76	100 (3.7E 12)
Osmium-193	76	100 (3.7E 12)
Osmium-194	76	1 (3.7E 10)
Palladium-100	46	100 (3.7E 12)
Palladium-101	46	100 (3.7E 12)
Palladium-103	46	100 (3.7E 12)
Palladium-107	46	100 (3.7E 12)
Palladium-109	46	1000 (3.7E 13)
Phosphorus-32	15	0.1 (3.7E 9)
Phosphorus-33	15	1 (3.7E 10)
Platinum-186	78	100 (3.7E 12)
Platinum-188	78	100 (3.7E 12)
Platinum-189	78	100 (3.7E 12)
Platinum-191	78	100 (3.7E 12)

Radionuclide Name	Atomic Number	Final RQ Curies (Bq)
Platinum-193m	78	100 (3.7E 12)
Platinum-193	78	1000 (3.7E 13)
Platinum-195m	78	100 (3.7E 12)
Platinum-197m	78	1000 (3.7E 13)
Platinum-197	78	1000 (3.7E 13)
Platinum-199	78	1000 (3.7E 13)
Platinum-200	78	100 (3.7E 12)
Plutonium-234	94	1000 (3.7E 13)
Plutonium-235	94	1000 (3.7E 13)
Plutonium-236	94	0.1 (3.7E 9)
Plutonium-237	94	1000 (3.7E 13)
Plutonium-238	94	0.01 (3.7E 8)
Plutonium-239	94	0.01 (3.7E 8)
Plutonium-240	94	0.01 (3.7E 8)
Plutonium-241	94	1 (3.7E 10)
Plutonium-242	94	0.01 (3.7E 8)
Plutonium-243	94	1000 (3.7E 13)
Plutonium-244	94	0.01 (3.7E 8)
Plutonium-245	94	100 (3.7E 12)
Polonium-203	84	100 (3.7E 12)
Polonium-205	84	100 (3.7E 12)
Polonium-207	84	10 (3.7E 11)
Polonium-210	84	0.01 (3.7E 8)
Potassium-40	19	1 (3.7E 10)
Potassium-42	19	100 (3.7E 12)
Potassium-43	19	10 (3.7E 11)
Potassium-44	19	100 (3.7E 12)
Potassium-45	19	1000 (3.7E 13)
Praseodymium-136	59	1000 (3.7E 13)
Praseodymium-137	59	1000 (3.7E 13)
Praseodymium-138m	59	100 (3.7E 12)

Radionuclide Name	Atomic Number	Final RQ Curies (Bq)
Praseodymium-139	59	1000 (3.7E 13)
Praseodymium-142m	59	1000 (3.7E 13)
Praseodymium-142	59	100 (3.7E 12)
Praseodymium-143	59	10 (3.7E 11)
Praseodymium-144	59	1000 (3.7E 13)
Praseodymium-145	59	1000 (3.7E 13)
Praseodymium-147	59	1000 (3.7E 13)
Promethium-141	61	1000 (3.7E 13)
Promethium-143	61	100 (3.7E 12)
Promethium-144	61	10 (3.7E 11)
Promethium-145	61	100 (3.7E 12)
Promethium-146	61	10 (3.7E 11)
Promethium-147	61	10 (3.7E 11)
Promethium-148m	61	10 (3.7E 11)
Promethium-148	61	10 (3.7E 11)
Promethium-149	61	100 (3.7E 12)
Promethium-150	61	100 (3.7E 12)
Promethium-151	61	100 (3.7E 12)
Protactinium-227	91	100 (3.7E 12)
Protactinium-228	91	10 (3.7E 11)
Protactinium-230	91	10 (3.7E 11)
Protactinium-231	91	0.01 (3.7E 8)
Protactinium-232	91	10 (3.7E 11)
Protactinium-233	91	100 (3.7E 12)
Protactinium-234	91	10 (3.7E 11)
Radium-223	88	1 (3.7E 10)
Radium-224	88	10 (3.7E 11)

Radionuclide Name	Atomic Number	Final RQ Curies (Bq)
Radium-225	88	1 (3.7E 10)
Radium-226Φ	88	0.1 (3.7E 9)
Radium-227	88	1000 (3.7E 13)
Radium-228	88	0.1 (3.7E 9)
Radon-220	86	0.1 (3.7E 9)
Radon-222	86	0.1 (3.7E 9)
Rhenium-177	75	1000 (3.7E 13)
Rhenium-178	75	1000 (3.7E 13)
Rhenium-181	75	100 (3.7E 12)
Rhenium-182 (12.7 hr)	75	10 (3.7E 11)
Rhenium-182 (64.0 hr)	75	10 (3.7E 11)
Rhenium-184m	75	10 (3.7E 11)
Rhenium-184	75	10 (3.7E 11)
Rhenium-186m	75	10 (3.7E 11)
Rhenium-186	75	100 (3.7E 12)
Rhenium-187	75	1000 (3.7E 13)
Rhenium-188m	75	1000 (3.7E 13)
Rhenium-188	75	1000 (3.7E 13)
Rhenium-189	75	1000 (3.7E 13)
Rhodium-99m	45	100 (3.7E 12)
Rhodium-99	45	10 (3.7E 11)
Rhodium-100	45	10 (3.7E 11)
Rhodium-101m	45	100 (3.7E 12)
Rhodium-101	45	10 (3.7E 11)
Rhodium-102m	45	10 (3.7E 11)
Rhodium-102	45	10 (3.7E 11)
Rhodium-103m	45	1000 (3.7E 13)
Rhodium-105	45	100 (3.7E 12)
Rhodium-106m	45	10 (3.7E 11)
Rhodium-107	45	1000 (3.7E 13)
Rubidium-79	37	1000 (3.7E 13)

Radionuclide Name	Atomic Number	Final RQ Curies (Bq)
Rubidium-81m	37	1000 (3.7E 13)
Rubidium-81	37	100 (3.7E 12)
Rubidium-82m	37	10 (3.7E 11)
Rubidium-83	37	10 (3.7E 11)
Rubidium-84	37	10 (3.7E 11)
Rubidium-86	37	10 (3.7E 11)
Rubidium-88	37	1000 (3.7E 13)
Rubidium-89	37	1000 (3.7E 13)
Rubidium-87	37	10 (3.7E 11)
Ruthenium-94	44	1000 (3.7E 13)
Ruthenium-97	44	100 (3.7E 12)
Ruthenium-103	44	10 (3.7E 11)
Ruthenium-105	44	100 (3.7E 12)
Ruthenium-106	44	1 (3.7E 10)
Samarium-141m	62	1000 (3.7E 13)
Samarium-141	62	1000 (3.7E 13)
Samarium-142	62	1000 (3.7E 13)
Samarium-145	62	100 (3.7E 12)
Samarium-146	62	0.01 (3.7E 8)
Samarium-147	62	0.01 (3.7E 8)
Samarium-151	62	10 (3.7E 11)
Samarium-153	62	100 (3.7E 12)
Samarium-155	62	1000 (3.7E 13)
Samarium-156	62	100 (3.7E 12)
Scandium-43	21	1000 (3.7E 13)
Scandium-44m	21	10 (3.7E 11)
Scandium-44	21	100 (3.7E 12)
Scandium-46	21	10 (3.7E 11)
Scandium-47	21	100 (3.7E 12)
Scandium-48	21	10 (3.7E 11)
Scandium-49	21	1000 (3.7E 13)
Selenium-70	34	1000 (3.7E 13)

Radionuclide Name	Atomic Number	Final RQ Curies (Bq)
Selenium-73m	34	100 (3.7E 12)
Selenium-73	34	10 (3.7E 11)
Selenium-75	34	10 (3.7E 11)
Selenium-79	34	10 (3.7E 11)
Selenium-81m	34	1000 (3.7E 13)
Selenium-81	34	1000 (3.7E 13)
Selenium-83	34	1000 (3.7E 13)
Silicon-31	14	1000 (3.7E 13)
Silicon-32	14	1 (3.7E 10)
Silver-102	47	100 (3.7E 12)
Silver-103	47	1000 (3.7E 13)
Silver-104m	47	1000 (3.7E 13)
Silver-104	47	1000 (3.7E 13)
Silver-105	47	10 (3.7E 11)
Silver-106m	47	10 (3.7E 11)
Silver-106	47	1000 (3.7E 13)
Silver-108m	47	10 (3.7E 11)
Silver-110m	47	10 (3.7E 11)
Silver-111	47	10 (3.7E 11)
Silver-112	47	100 (3.7E 12)
Silver-115	47	1000 (3.7E 13)
Sodium-22	11	10 (3.7E 11)
Sodium-24	11	10 (3.7E 11)
Strontium-80	38	100 (3.7E 12)
Strontium-81	38	1000 (3.7E 13)
Strontium-83	38	100 (3.7E 12)
Strontium-85m	38	1000 (3.7E 13)
Strontium-85	38	10 (3.7E 11)
Strontium-87m	38	100 (3.7E 12)
Strontium-89	38	10 (3.7E 11)
Strontium-90	38	0.1 (3.7E 9)
Strontium-91	38	10 (3.7E 11)

Radionuclide Name	Atomic Number	Final RQ Curies (Bq)
Strontium-92	38	100 (3.7E 12)
Sulfur-35	16	1 (3.7E 10)
Tantalum-172	73	100 (3.7E 12)
Tantalum-173	73	100 (3.7E 12)
Tantalum-174	73	100 (3.7E 12)
Tantalum-175	73	100 (3.7E 12)
Tantalum-176	73	10 (3.7E 11)
Tantalum-177	73	1000 (3.7E 13)
Tantalum-178	73	1000 (3.7E 13)
Tantalum-179	73	1000 (3.7E 13)
Tantalum-180m	73	1000 (3.7E 13)
Tantalum-180	73	100 (3.7E 12)
Tantalum-182m	73	1000 (3.7E 13)
Tantalum-182	73	10 (3.7E 11)
Tantalum-183	73	100 (3.7E 12)
Tantalum-184	73	10 (3.7E 11)
Tantalum-185	73	1000 (3.7E 13)
Tantalum-186	73	1000 (3.7E 13)
Technetium-93m	43	1000 (3.7E 13)
Technetium-93	43	100 (3.7E 12)
Technetium-94m	43	100 (3.7E 12)
Technetium-94	43	10 (3.7E 11)
Technetium-96m	43	1000 (3.7E 13)
Technetium-96	43	10 (3.7E 11)
Technetium-97m	43	100 (3.7E 12)
Technetium-97	43	100 (3.7E 12)
Technetium-98	43	10 (3.7E 11)
Technetium-99m	43	100 (3.7E 12)
Technetium-99	43	10 (3.7E 11)
Technetium-101	43	1000 (3.7E 13)
Technetium-104	43	1000 (3.7E 13)
Tellurium-116	52	1000 (3.7E 13)

Radionuclide Name	Atomic Number	Final RQ Curies (Bq)
Tellurium-121m	52	10 (3.7E 11)
Tellurium-121	52	10 (3.7E 11)
Tellurium-123m	52	10 (3.7E 11)
Tellurium-123	52	10 (3.7E 11)
Tellurium-125m	52	10 (3.7E 11)
Tellurium-127m	52	10 (3.7E 11)
Tellurium-127	52	1000 (3.7E 13)
Tellurium-129m	52	10 (3.7E 11)
Tellurium-129	52	1000 (3.7E 13)
Tellurium-131m	52	10 (3.7E 11)
Tellurium-131	52	1000 (3.7E 13)
Tellurium-132	52	10 (3.7E 11)
Tellurium-133m	52	1000 (3.7E 13)
Tellurium-133	52	1000 (3.7E 13)
Tellurium-134	52	1000 (3.7E 13)
Terbium-147	65	100 (3.7E 12)
Terbium-149	65	100 (3.7E 12)
Terbium-150	65	100 (3.7E 12)
Terbium-151	65	10 (3.7E 11)
Terbium-153	65	100 (3.7E 12)
Terbium-154	65	10 (3.7E 11)
Terbium-155	65	100 (3.7E 12)
Terbium-156m (5.0 hr)	65	1000 (3.7E 13)
Terbium-156m (24.4 hr)	65	1000 (3.7E 13)
Terbium-156	65	10 (3.7E 11)
Terbium-157	65	100 (3.7E 12)
Terbium-158	65	10 (3.7E 11)
Terbium-160	65	10 (3.7E 11)
Terbium-161	65	100 (3.7E 12)
Thallium-194m	81	100 (3.7E 12)
Thallium-194	81	1000 (3.7E 13)

Radionuclide Name	Atomic Number	Final RQ Curies (Bq)
Thallium-195	81	100 (3.7E 12)
Thallium-197	81	100 (3.7E 12)
Thallium-198m	81	100 (3.7E 12)
Thallium-198	81	10 (3.7E 11)
Thallium-199	81	100 (3.7E 12)
Thallium-200	81	10 (3.7E 11)
Thallium-201	81	1000 (3.7E 13)
Thallium-202	81	10 (3.7E 11)
Thallium-204	81	10 (3.7E 11)
Thorium-226	90	100 (3.7E 12)
Thorium-227	90	1 (3.7E 10)
Thorium-228	90	0.01 (3.7E 8)
Thorium-229	90	0.001 (3.7E 7)
Thorium-230	90	0.01 (3.7E 8)
Thorium-231	90	100 (3.7E 12)
Thorium-232Φ	90	0.001 (3.7E 7)
Thorium-234	90	100 (3.7E 12)
Thulium-162	69	1000 (3.7E 13)
Thulium-166	69	10 (3.7E 11)
Thulium-167	69	100 (3.7E 12)
Thulium-170	69	10 (3.7E 11)
Thulium-171	69	100 (3.7E 12)
Thulium-172	69	100 (3.7E 12)
Thulium-173	69	100 (3.7E 12)
Thulium-175	69	1000 (3.7E 13)
Tin-110	50	100 (3.7E 12)
Tin-111	50	1000 (3.7E 13)
Tin-113	50	10 (3.7E 11)
Tin-117m	50	100 (3.7E 12)
Tin-119m	50	10 (3.7E 11)
Tin-121m	50	10 (3.7E 11)
Tin-121	50	1000 (3.7E 13)

APPENDIX B – RADIONUCLIDES LISTED UNDER CERCLA

Radionuclide Name	Atomic Number	Final RQ Curies (Bq)
Tin-123m	50	1000 (3.7E 13)
Tin-123	50	10 (3.7E 11)
Tin-125	50	10 (3.7E 11)
Tin-126	50	1 (3.7E 10)
Tin-127	50	100 (3.7E 12)
Tin-128	50	1000 (3.7E 13)
Titanium-44	22	1 (3.7E 10)
Titanium-45	22	1000 (3.7E 13)
Tungsten-176	74	1000 (3.7E 13)
Tungsten-177	74	100 (3.7E 12)
Tungsten-178	74	100 (3.7E 12)
Tungsten-179	74	1000 (3.7E 13)
Tungsten-181	74	100 (3.7E 12)
Tungsten-185	74	10 (3.7E 11)
Tungsten-187	74	100 (3.7E 12)
Tungsten-188	74	10 (3.7E 11)
Uranium-230	92	1 (3.7E 10)
Uranium-231	92	1000 (3.7E 13)
Uranium-232	92	0.01 (3.7E 8)
Uranium-233	92	0.1 (3.7E 9)
Uranium-234φ	92	0.1 (3.7E 9)
Uranium-235φ	92	0.1 (3.7E 9)
Uranium-236	92	0.1 (3.7E 9)
Uranium-237	92	100 (3.7E 12)
Uranium-238φ	92	0.1& (3.7E 9)
Uranium-239	92	1000 (3.7E 13)
Uranium-240	92	1000 (3.7E 13)
Vanadium-47	23	1000 (3.7E 13)
Vanadium-48	23	10 (3.7E 11)
Vanadium-49	23	1000 (3.7E 13)
Xenon-120	54	100 (3.7E 12)
Xenon-121	54	10 (3.7E 11)

Radionuclide Name	Atomic Number	Final RQ Curies (Bq)
Xenon-122	54	100 (3.7E 12)
Xenon-123	54	10 (3.7E 11)
Xenon-125	54	100 (3.7E 12)
Xenon-127	54	100 (3.7E 12)
Xenon-129m	54	1000 (3.7E 13)
Xenon-131m	54	1000 (3.7E 13)
Xenon-133m	54	1000 (3.7E 13)
Xenon-133	54	1000 (3.7E 13)
Xenon-135m	54	10 (3.7E 11)
Xenon-135	54	100 (3.7E 12)
Xenon-138	54	10 (3.7E 11)
Ytterbium-162	70	1000 (3.7E 13)
Ytterbium-166	70	10 (3.7E 11)
Ytterbium-167	70	1000 (3.7E 13)
Ytterbium-169	70	10 (3.7E 11)
Ytterbium-175	70	100 (3.7E 12)
Ytterbium-177	70	1000 (3.7E 13)
Ytterbium-178	70	1000 (3.7E 13)
Yttrium-86m	39	1000 (3.7E 13)
Yttrium-86	39	10 (3.7E 11)
Yttrium-87	39	10 (3.7E 11)
Yttrium-88	39	10 (3.7E 11)
Yttrium-90m	39	100 (3.7E 12)
Yttrium-90	39	10 (3.7E 11)
Yttrium-91m	39	1000 (3.7E 13)
Yttrium-91	39	10 (3.7E 11)
Yttrium-92	39	100 (3.7E 12)
Yttrium-93	39	100 (3.7E 12)
Yttrium-94	39	1000 (3.7E 13)
Yttrium-95	39	1000 (3.7E 13)
Zinc-62	30	100 (3.7E 12)
Zinc-63	30	1000 (3.7E 13)

Radionuclide Name	Atomic Number	Final RQ Curies (Bq)
Zinc-65	30	10 (3.7E 11)
Zinc-69m	30	100 (3.7E 12)
Zinc-69	30	1000 (3.7E 13)
Zinc-71m	30	100 (3.7E 12)
Zinc-72	30	100 (3.7E 12)
Zirconium-86	40	100 (3.7E 12)
Zirconium-88	40	10 (3.7E 11)
Zirconium-89	40	100 (3.7E 12)
Zirconium-93	40	1 (3.7E 10)
Zirconium-95	40	10 (3.7E 11)
Zirconium-97	40	10 (3.7E 11)

NOTES:

Ci—Curie. The curie represents a rate of radioactive decay. One curie is the quantity of any radioactive nuclide which undergoes 3.7E 10 disintegrations per second.

Bq—Becquerel. The becquerel represents a rate of radioactive decay. One becquerel is the quantity of any radioactive nuclide which undergoes one disintegration per second. One curie is equal to 3.7E 10 becquerel.

@—Final RQs for all radionuclides apply to chemical compounds containing the radionuclides and elemental forms regardless of the diameter of pieces of solid material.

&—The adjusted RQ of one curie applies to all radionuclides not otherwise listed. Whenever the RQs in the Consolidated List of Chemicals subject to EPCRA, CERCLA and Section 112(r) of CAA and this Appendix B are in conflict, the lowest RQ shall apply. For example, uranyl acetate and uranyl nitrate have adjusted RQs shown in the CAS number ordered chemical list and the alphabetical chemical list (Appendix A) of 100 pounds, equivalent to about one-tenth the RQ level for uranium-238 listed in this appendix.

E—Exponent to the base 10. For example, 1.3E 2 is equal to 130 while 1.3E 3 is equal to 1300.

m—Signifies a nuclear isomer which is a radionuclide in a higher energy metastable state relative to the parent isotope.

φ—Notification requirements for releases of mixtures or solutions of radionuclides can be found in 40 CFR §302.6(b)(2). Final RQs for the following four common radionuclide mixtures are provided: radium-226 in secular equilibrium with its daughters (0.053 curie); natural uranium (0.1 curie); natural uranium in secular equilibrium with its daughters (0.052 curie); and natural thorium in secular equilibrium with its daughters (0.011 curie).

APPENDIX C

THE LIST BELOW CONTAINS RCRA WASTE STREAMS AND UNLISTED HAZARDOUS WASTES.
THE DESCRIPTIONS OF THE WASTE STREAMS HAVE BEEN TRUNCATED.
THE LIST SHOULD BE USED FOR REFERENCE ONLY.
COMPLIANCE INFORMATION CAN BE FOUND IN 40 CFR PART 302 AND TABLE 302.4

RCRA CODE	RQ	NAME
F001	10	The following spent halogenated solvents used in degreasing:
	100	(a) Tetrachloroethylene (CAS No. 127-18-4, RCRA Waste No. U210)
	100	(b) Trichloroethylene (CAS No. 79-01-6, RCRA Waste No. U228)
	1,000	(c) Methylene chloride (CAS No. 75-09-2, RCRA Waste No. U080)
	1,000	(d) 1,1,1-Trichloroethane (CAS No. 71-55-6, RCRA Waste No. U226)
	10	(e) Carbon tetrachloride (CAS No. 56-23-5, RCRA Waste No. U211)
	5,000	(f) Chlorinated fluorocarbons
F002	10	The following spent halogenated solvents:
	100	(a) Tetrachloroethylene (CAS No. 127-18-4, RCRA Waste No. U210)
	1,000	(b) Methylene chloride (CAS No. 75-09-2, RCRA Waste No. U080)
	100	(c) Trichloroethylene (CAS No. 79-01-6, RCRA Waste No. U228)
	1,000	(d) 1,1,1-Trichloroethane (CAS No. 71-55-6, RCRA Waste No. U226)
	100	(e) Chlorobenzene (CAS No. 108-90-7, RCRA Waste No. U037)
	5,000	(f) 1,1,2-Trichloro-1,2,2-trifluoroethane (CAS No. 76-13-1)
	100	(g) o-Dichlorobenzene (CAS No. 95-50-1, RCRA Waste No. U070)
	5,000	(h) Trichlorofluoromethane (CAS No. 75-69-4, RCRA Waste No. U121)
	100	(i) 1,1,2-Trichloroethane (CAS No. 79-00-5, RCRA Waste No. U227)
F003	100	The following spent non-halogenated solvents and still bottoms from recovery:
	1,000	(a) Xylene (CAS No. 1330-20-7, RCRA Waste No. U239)
	5,000	(b) Acetone (CAS No. 67-64-1, RCRA Waste No. U002)
	5,000	(c) Ethyl acetate (CAS No. 141-78-6, RCRA Waste No. U112)
	1,000	(d) Ethylbenzene (CAS No. 100-41-4)
	100	(e) Ethyl ether (CAS No. 60-29-7, RCRA Waste No. U117)
	5,000	(f) Methyl isobutyl ketone (CAS No. 108-10-1, RCRA Waste No. U161)
	5,000	(g) n-Butyl alcohol (CAS No. 71-36-3, RCRA Waste No. U031)
	5,000	(h) Cyclohexanone (CAS No. 108-94-1, RCRA Waste No. U057)
	5,000	(i) Methanol (CAS No. 67-56-1, RCRA Waste No. U154)
F004	100	The following spent non-halogenated solvents and still bottoms from recovery:
	100	(a) Cresols/cresylic acid (CAS No. 1319-77-3, RCRA Waste No. U052)
	1,000	(b) Nitrobenzene (CAS No. 98-95-3, RCRA Waste No. U169)
F005	100	The following spent non-halogenated solvents and still bottoms from recovery:
	1,000	(a) Toluene (CAS No. 108-88-3, RCRA Waste No. U220)
	5,000	(b) Methyl ethyl ketone (CAS No. 78-93-3, RCRA Waste No. U159)
	100	(c) Carbon disulfide (CAS No. 75-15-0, RCRA Waste No. P022)
	5,000	(d) Isobutanol (CAS No. 78-83-1, RCRA Waste No. U140)
	1,000	(e) Pyridine (CAS No. 110-86-1, RCRA Waste No. U196)

RCRA CODE	RQ	NAME
F006	10	Wastewater treatment sludges from electroplating operations (w/some exceptions)
F007	10	Spent cyanide plating bath solns. from electroplating
F008	10	Plating bath residues from electroplating where cyanides are used
F009	10	Spent stripping/cleaning bath solns. from electroplating where cyanides are used
F010	10	Quenching bath residues from metal heat treating where cyanides are used
F011	10	Spent cyanide soln. from salt bath pot cleaning from metal heat treating
F012	10	Quenching wastewater sludges from metal heat treating where cyanides are used
F019	10	Wastewater treatment sludges from chemical conversion aluminum coating
F020	1	Wastes from production or use of tri/tetrachlorophenol or derivative intermediates
F021	1	Wastes from production or use of pentachlorophenol or intermediates for derivatives
F022	1	Wastes from use of tetra/penta/hexachlorobenzenes under alkaline conditions
F023	1	Wastes from mat. production on equipment previously used for tri\tetrachlorophenol
F024	1	Wastes from production of chlorinated aliphatic hydrocarbons (C1-C5)
F025	1	Lights ends, filters from production of chlorinated aliphatic hydrocarbons (C1-C5)
F026	1	Waste from equipment previously used to production tetra/penta/hexachlorobenzenes
F027	1	Discarded formulations containing tri/tetra/pentachlorophenols or derivatives
F028	1	Residues from incineration of soil contaminated w/ F020,F021,F022,F023,F026,F027
F032	1	Wastewaters, process residuals from wood preserving using chlorophenolic solns.
F034	1	Wastewaters, process residuals from wood preserving using creosote formulations
F035	1	Wastewaters, process residuals from wood preserving using arsenic or chromium
F037	1	Petroleum refinery primary oil/water/solids separation sludge
F038	1	Petroleum refinery secondary (emulsified) oil/water/solids separation sludge
F039	1	Multisource leachate
K001	1	Wastewater treatment sludge from creosote/pentachlorophenol wood preserving
K002	10	Wastewater treatment sludge from production of chrome yellow and orange pigments
K003	10	Wastewater treatment sludge from production of molybdate orange pigments
K004	10	Wastewater treatment sludge from production of zinc yellow pigments
K005	10	Wastewater treatment sludge from production of chrome green pigments
K006	10	Wastewater treatment sludge from production of chrome oxide green pigments
K007	10	Wastewater treatment sludge from production of iron blue pigments
K008	10	Oven residue from production of chrome oxide green pigments
K009	10	Dist. bottoms from production of acetaldehyde from ethylene
K010	10	Dist. side cuts from production of acetaldehyde from ethylene
K011	10	Bottom stream from wastewater stripper in acrylonitrile production
K013	10	Bottom stream from acetonitrile column in acrylonitrile production
K014	5,000	Bottoms from acetonitrile purification column in acrylonitrile production
K015	10	Still bottoms from the dist. of benzyl chloride
K016	1	Heavy ends or dist. residues from production of carbon tetrachloride
K017	10	Heavy ends from the purification column in epichlorohydrin production
K018	1	Heavy ends from the fractionation column in ethyl chloride production
K019	1	Heavy ends from the dist. of ethylene dichloride during its production
K020	1	Heavy ends from the dist. of vinyl chloride during production of the monomer

RCRA CODE	RQ	NAME
K021	10	Aqueous spent antimony catalyst waste from fluoromethanes production
K022	1	Dist. bottom tars from production of phenol/acetone from cumene
K023	5,000	Dist. light ends from production of phthalic anhydride from naphthalene
K024	5,000	Dist. bottoms from production of phthalic anhydride from naphthalene
K025	10	Dist. bottoms from production of nitrobenzene by nitration of benzene
K026	1,000	Stripping still tails from the production of methyl ethyl pyridines
K027	10	Centrifuge/dist. residues from toluene diisocyanate production
K028	1	Spent catalyst from hydrochlorinator reactor in production of 1,1,1-trichloroethane
K029	1	Waste from product steam stripper in production of 1,1,1-trichloroethane
K030	1	Column bottoms/heavy ends from production of trichloroethylene and perchloroethylene
K031	1	By-product salts generated in the production of MSMA and cacodylic acid
K032	10	Wastewater treatment sludge from the production of chlordane
K033	10	Wastewaster/scrubwater from chlorination of cyclopentadiene in chlordane production
K034	10	Filter solids from filtration of hexachlorocyclopentadiene in chlordane production
K035	1	Wastewater treatment sludges from the production of creosote
K036	1	Still bottoms from toluene reclamation distillation in disulfoton production
K037	1	Wastewater treatment sludges from the production of disulfoton
K038	10	Wastewater from the washing and stripping of phorate production
K039	10	Filter cake from filtration of diethylphosphorodithioic adid in phorate production
K040	10	Wastewater treatment sludge from the production of phorate
K041	1	Wastewater treatment sludge from the production of toxaphene
K042	10	Heavy ends/residues from dist. of tetrachlorobenzene in 2,4,5-T production
K043	10	2,6-Dichlorophenol waste from the production of 2,4-D
K044	10	Wastewater treatment sludge from manuf. and processing of explosives
K045	10	Spent carbon from treatment of wastewater containing explosives
K046	10	Wastewater sludge from manuf., formulating, loading of lead-based initiating compd
K047	10	Pink/red water from TNT operations
K048	10	Dissolved air flotation (DAF) float from the petroleum refining industry
K049	10	Slop oil emulsion solids from the petroleum refining industry
K050	10	Heat exchanger bundle cleaning sludge from petroleum refining industry
K051	10	API separator sludge from the petroleum refining industry
K052	10	Tank bottoms (leaded) from the petroleum refining industry
K060	1	Ammonia still lime sludge from coking operations
K061	10	Emission control dust/sludge from primary production of steel in electric furnaces
K062	10	Spent pickle liquor generated by steel finishing (SIC codes 331 and 332)
K064	10	Acid plant blowdown slurry/sludge from blowdown slurry from primary copper production
K065	10	Surface impoundment solids at primary lead smelting facilities
K066	10	Sludge from treatment of wastewater/acid plant blowdown from primary zinc production
K069	10	Emission control dust/sludge from secondary lead smelting
K071	1	Brine purification muds from mercury cell process in chlorine production
K073	10	Chlorinated hydrocarbon waste from diaphragm cell process in chlorine production
K083	100	Distillation bottoms from aniline extraction

RCRA CODE	RQ	NAME
K084	1	Wastewater sludges from production of veterinary pharm. from arsenic compds.
K085	10	Distillation or fractionation column bottoms in production of chlorobenzenes
K086	10	Wastes/sludges from production of inks from chromium and lead-containing substances
K087	100	Decanter tank tar sludge from coking operations
K088	10	Spent potliners from primary aluminum reduction
K090	10	Emission control dust/sludge from ferrochromiumsilicon production
K091	10	Emission control dust/sludge from ferrochromium production
K093	5,000	Dist. light ends from production of phthalic anhydride by ortho-xylene
K094	5,000	Dist. bottoms in production of phthalic anhydride by ortho-xylene
K095	100	Distillation bottoms in production of 1,1,1-trichloroethane
K096	100	Heavy ends from dist. column in production of 1,1,1-trichloroethane
K097	1	Vacuum stripper discharge from the chlordane chlorinator in production of chlordane
K098	1	Untreated process wastewater from the production of toxaphene
K099	10	Untreated wastewater from the production of 2,4-D
K100	10	Waste leaching soln from emission control dust/sludge in secondary lead smelting
K101	1	Dist. tar residue from aniline in production of veterinary pharm. from arsenic compd.
K102	1	Residue from activated carbon in production of veterinary pharm. from arsenic compds.
K103	100	Process residues from aniline extraction from the production of aniline
K104	10	Combined wastewater streams generated from production of nitrobenzene/aniline
K105	10	Aqueous stream from washing in production of chlorobenzenes
K106	1	Wastewater treatment sludge from mercury cell process in chlorine production
K107	10	Column bottoms from separation in production of UDMH from carboxylic acid hydrazides
K108	10	Condensed column overheads and vent gas from production of UDMH from -COOH hydrazides
K109	10	Spent filter cartridges from purif. of UDMH production from carboxylic acid hydrazides
K110	10	Condensed column overheads from separation in UDMH production from -COOH hydrazides
K111	10	Product washwaters from production of dinitrotoluene via nitration of toluene
K112	10	Reaction by-product water from drying in toluenediamine prod from dinitrotoluene
K113	10	Condensed liquid light ends from purification of toluenediamine during its production
K114	10	Vicinals from purification of toluenediamine during its production from dinitrotoluene
K115	10	Heavy ends from toluenediamine purification during production from dinitrotoluene
K116	10	Organic condensate from solvent recovery system in production of toluene diisocyanate
K117	1	Wastewater from vent gas scrubber in ethylene bromide prod by ethene bromination
K118	1	Spent absorbent solids in purification of ethylene dibromide in its production
K123	10	Process wastewater from the production of ethylenebisdithiocarbamic acid and salts
K124	10	Reactor vent scrubber water from prod of ethylenebisdithiocarbamic acid and salts
K125	10	Filtration/other solids from production of ethylenebisdithiocarbamic acid and salts
K126	10	Dust/sweepings from the production of ethylenebisdithiocarbamic acid and salts
K131	100	Wastewater and spent sulfuric acid from the production of methyl bromide
K132	1,000	Spent absorbent and wastewater solids from the production of methyl bromide
K136	1	Still bottoms from ethylene dibromide purif. in production by ethene bromination
K141	1	Process residues from coal tar recovery in coking

RCRA CODE	RQ	NAME
K142	1	Tar storage tank residues from coke production from coal or recovery of coke by-prods
K143	1	Process residues from recovery of light oil in coking
K144	1	Wastewater residues from light oil refining in coking
K145	1	Residues from naphthalene collection and recovery from coke by-products
K147	1	Tar storage tank residues from coal tar refining in coking
K148	1	Residues from coal tar distillation, including still bottoms, in coking
K149	10	Distillation bottoms from the production of chlorinated toluenes/benzoyl chlorides
K150	10	Organic residuals from Cl gas and HCl recovery from chlorinated toluene production
K151	10	Wastewater treatment sludge from production of chlorotoluenes/benzoyl chlorides
K156	10	Organic waste from production of carbamates and carbamoyl oximes
K157	10	Wastewaters from production of carbamates and carbamoyl oximes (not sludges)
K158	10	Bag house dusts & filter/separation solids from prod of carbamates, carb oximes
K159	10	Organics from treatment of thiocarbamate waste
K161	1	Purif. solids/bag house dust/sweepings from prod of dithiocarbamate acids/salts
K169	10	Crude oil storage tank sediment from refining operations
K170	1	Clarified slurry oil tank sediment of in-line filter/separation solids
K171	1	Spent hydrotreating catalyst
K172	1	Spent hydrorefining catalyst
K174	1	Wastewater treatment sludges from the production of ethylene dichloride or vinyl chloride monomer, (including sludges that result from commingled EDC or VCM wastewater and other wastewater), unless the sludges meet certain disposal conditions. (See 40 CFR 261.32)
K175	1	Wastewater treatment sludges from the production vinyl chloride monomer using mercuric chloride catalyst in an acetylene-based process (See 40 CFR 261.32)
K176	1	Baghouse filters from the production of antimony oxide, including filters from the production of intermediates (e.g., antimony metal or crude antimony oxide)
K177	5000	Slag from the production of antimony oxide that is speculatively accumulated or disposed, including slag from the production of intermediates (e.g., antimony metal or crude antimony oxide)
K178	1000	Residues from manufacturing and manufacturing-site storage of ferric chloride from acids formed during the production of titanium dioxide using the chloride-ilmenite process
K181	1*	Non-wastewaters generated from the production of certain dyes, pigments, and FD&C colorants, exceeding constituent mass loading levels, subject to disposal exceptions in 40 CFR 261.32
D001	100	Unlisted hazardous wastes characteristic of ignitability
D002	100	Unlisted hazardous wastes characteristic of corrosivity
D003	100	Unlisted hazardous wastes characteristic of reactivity
		Unlisted hazardous wastes characteristic of toxicity:
D004	1	Arsenic
D005	1,000	Barium
D006	10	Cadmium
D007	10	Chromium
D008	10	Lead
D009	1	Mercury
D010	10	Selenium
D011	1	Silver

RCRA CODE	RQ	NAME
D012	1	Endrin
D013	1	Lindane
D014	1	Methoxychlor
D015	1	Toxaphene
D016	100	2,4-D
D017	100	2,4,5-TP
D018	10	Benzene
D019	10	Carbon tetrachloride
D020	1	Chlordane
D021	100	Chlorobenzene
D022	10	Chloroform
D023	100	o-Cresol
D024	100	m-Cresol
D025	100	p-Cresol
D026	100	Cresol
D027	100	1,4-Dichlorobenzene
D028	100	1,2-Dichloroethane
D029	100	1,1-Dichloroethylene
D030	10	2,4-Dinitrotoluene
D031	1	Heptachlor (and epoxide)
D032	10	Hexachlorobenzene
D033	1	Hexachlorobutadiene
D034	100	Hexachloroethane
D035	5,000	Methyl ethyl ketone
D036	1,000	Nitrobenzene
D037	10	Pentachlorophenol
D038	1,000	Pyridine
D039	100	Tetrachloroethylene
D040	100	Trichloroethylene
D041	10	2,4,5-Trichlorophenol
D042	10	2,4,6-Trichlorophenol
D043	1	Vinyl chloride

APPENDIX D

EPCRA SECTION 313, TOXIC RELEASE INVENTORY (TRI) CHEMICAL CATEGORIES

The EPCRA Section 313, Toxic Release Inventory (TRI) has 31 chemical categories (including four categories containing 68 specifically-listed chemicals). Each chemical category is listed below with its category code and category name.

Source: http://www2.epa.gov/toxics-release-inventory-tri-program/tri-listed-chemicals
Also see 40 CFR 372.65.

N010 Antimony Compounds. *Includes any unique chemical substance that contains antimony as part of that chemical's infrastructure.*

N020 Arsenic Compounds. *Includes any unique chemical substance that contains arsenic as part of that chemical's infrastructure.*

N040 Barium Compounds. *Includes any unique chemical substance that contains barium as part of that chemical's infrastructure. This category does not include: Barium sulfate CAS Number 7727-43-7*

N050 Beryllium Compounds. *Includes any unique chemical substance that contains beryllium as part of that chemical's infrastructure.*

N078 Cadmium Compounds. *Includes any unique chemical substance that contains cadmium as part of that chemical's infrastructure.*

N084 Chlorophenols. *Includes any chemical substance with the following chemical formula:*

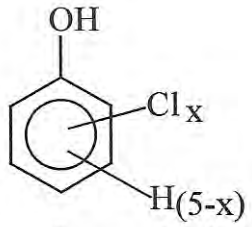

Where x = 1 to 5

N090 Chromium Compounds. *Includes any unique chemical substance that contains chromium as part of that chemical's infrastructure* **(except for chromite ore mined in the Transvaal Region of South Africa and the unreacted ore component of the chromite ore processing residue (COPR). COPR is the solid waste remaining after aqueous extraction of oxidized chromite ore that has been combined with soda ash and kiln roasted at approximately 2,000 deg.F.)**

N096 Cobalt Compounds. *Includes any unique chemical substance that contains cobalt as part of that chemical's infrastructure.*

N100 Copper Compounds. *Includes any unique chemical substance that contains copper as part of that chemical's infrastructure. This category does not include copper phthalocyanine compounds that are substituted with only hydrogen, and/or chlorine, and/or bromine.*

N106 Cyanide Compounds. *Includes any chemical substance with the following chemical formula:*

$X^+ CN^-$ *where* $X = H^+$ *or any other group where a formal dissociation can be made. For example* KCN *or* $Ca(CN)^2$.

N120 Diisocyanates *This category includes only those chemicals listed below.*

CAS Number	Diisocyanate Chemical Name
38661-72-2	1,3-Bis(methylisocyanate)-cyclohexane
10347-54-3	1,4-Bis(methylisocyanate)-cyclohexane
2556-36-7	1,4-Cyclohexanediisocyanate
134190-37-7	Diethyldiisocyanatobenzene
4128-73-8	4,4'-Diisocyanatodiphenyl ether
75790-87-3	2,4'-Diisocyanatodiphenyl sulfide
91-93-0	3,3'-Dimethoxybenzidine-4,4'-diisocyanate
91-97-4	3,3'-Dimethyl-4,4'-diphenylene diisocyanate
139-25-3	3,3'-Dimethyldiphenyl methane-4,4'-diisocyanate
822-06-0	Hexamethylene-1,6-diisocyanate
4098-71-9	Isophorone diisocyanate
75790-84-0	4-Methyldiphenylmethane-3,4-diisocyanate
5124-30-1	1,1-Methylenebis(4-isocyanatocyclohexane)
101-68-8	Methylenebis(phenylisocyanate) (MDI)
3173-72-6	1,5-Naphthalene diisocyanate

123-61-5	1,3-Phenylene diisocyanate
104-49-4	1,4-Phenylene diisocyanate
9016-87-9	Polymeric diphenylmethane diisocyanate
16938-22-0	2,2,4-Trimethylhexamethylenediisocyanate
15646-96-5	2,4,4-Trimethylhexamethylene diisocyanate

N150 Dioxin and Dioxin-Like Compounds
(Manufacturing; and the processing or otherwise use of dioxin and dioxin-like compounds if the dioxin and dioxin-like compounds are present as contaminants in a chemical and if they were created during the manufacturing of that chemical.) This category includes only those chemicals listed below.

CAS Number	Dioxin Chemical Name
1746-01-6	2,3,7,8- Tetrachlorodibenzo-*p*-dioxin
40321-76-4	1,2,3,7,8-Pentachlorodibenzo-*p*-dioxin
39227-28-6	1,2,3,4,7,8-Hexachlorodibenzo-*p*-dioxin
57653-85-7	1,2,3,6,7,8-Hexachlorodibenzo-*p*-dioxin
19408-74-3	1,2,3,7,8,9-Hexachlorodibenzo-*p*-dioxin
35822-46-9	1,2,3,4,6,7,8-Heptachlorodibenzo-*p*-dioxin
3268-87-9	1,2,3,4,6,7,8,9-Octachlorodibenzo-*p*-dioxin
51207-31-9	2,3,7,8-Tetrachlorodibenzofuran
57117-41-6	1,2,3,7,8-Pentachlorodibenzofuran
57117-31-4	2,3,4,7,8-Pentachlorodibenzofuran
70648-26-9	1,2,3,4,7,8-Hexachlorod-benzofuran
57117-44-9	1,2,3,6,7,8-Hexachlorodibenzofuran
72918-21-9	1,2,3,7,8,9-Hexachlorodibenzofuran
60851-34-5	2,3,4,6,7,8-Hexachlorodibenzofuran

67562-39-4	1,2,3,4,6,7,8-Heptachlorodibenzofuran
55673-89-7	1,2,3,4,7,8,9-Heptachlorodibenzofuran
39001-02-0	1,2,3,4,6,7,8,9-Octachlorodibenzofuran

N171 Ethylenebisdithiocarbamic acid, salts and esters (EBDCs). *Includes any unique chemical substance that contains an EBDC or an EBDC salt as part of that chemical's infrastructure.*

N230 Certain Glycol Ethers. *Includes any chemical substance with the following chemical formula:*

R-(OCH_2CH_2) n-OR'

where n = 1, 2, or 3
R = alkyl C7 or less; or
R = phenyl or alkyl substituted phenyl;
R' = H, or alkyl C7 or less; or
OR' = consisting of carboxylic acid ester, sulfate, phosphate, nitrate, or sulfonate.

N420 Lead Compounds. *Includes any unique chemical substance that contains lead as part of that chemical's infrastructure.*

N450 Manganese Compounds. *Includes any unique chemical substance that contains manganese as part of that chemical's infrastructure.*

N458 Mercury Compounds. *Includes any unique chemical substance that contains mercury as part of that chemical's infrastructure.*

N495 Nickel Compounds. *Includes any unique chemical substance that contains nickel as part of that chemical's infrastructure.*

N503 Nicotine and salts. *Includes any unique chemical substance that contains nicotine or a nicotine salt as part of that chemical's infrastructure.*

N511 Nitrate compounds (water dissociable; reportable only when in aqueous solution)

N530 Nonylphenyol. *This category includes only those chemicals listed below.*

This category was added to the TRI chemical list in September 2014. Facilities that meet TRI reporting thresholds for nonylphenol should begin collecting release information on January 1, 2015 (reporting forms due July 1, 2016).

CAS Number	Nonylphenol Name
104-40-5	4-Nonylphenol
11066-49-2	Isononylphenol
25154-52-3	Nonylphenol
26543-97-5	4-Isononylphenol
84852-15-3	4-Nonylphenol, branched
90481-04-2	Nonylphenol, branched

N575 Polybrominated Biphenyls (PBBs). *Includes any chemical substance with the following chemical formula:*

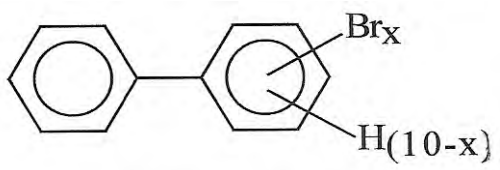

Where x = 1 to 10

N583 Polychlorinated alkanes (C10 to C13) (except for those members of the category that have an average chain length of 12 carbons and contain an average chlorine content of 60% by weight which are subject to the 0.1% *de minimis*). *Includes any chemical substance with the following chemical formula:*

$C_x H_{2x+2-y} Cl_y$
where x = 10 to 13;
y = 3 to 12; and
the average chlorine content ranges from 40-70% with the limiting molecular formulas C10H19Cl3 and C13H16Cl12.

N590 Polycyclic aromatic compounds (PACs). *This category includes the chemicals listed below.*

CAS Number	PAC Chemical Name
56-55-3	Benz(a)anthracene
205-99-2	Benzo(b)fluoranthene

205-82-3	Benzo(j)fluoranthene
207-08-9	Benzo(k)fluoranthene
206-44-0	Benzo(j,k)fluorene
189-55-9	Benzo(r,s,t)pentaphene
218-01-9	Benzo(a)phenanthrene
50-32-8	Benzo(a)pyrene
226-36-8	Dibenz(a,h)acridine
224-42-0	Dibenz(a,j)acridine
53-70-3	Dibenzo(a,h)anthracene
194-59-2	7H-Dibenzo(c,g)carbazole
5385-75-1	Dibenzo(a,e)fluoranthene
192-65-4	Dibenzo(a,e)pyrene
189-64-0	Dibenzo(a,h)pyrene
191-30-0	Dibenzo(a,l)pyrene
57-97-6	7,12-Dimethylbenz(a)-anthracene
42397-64-8	1,6-Dinitropyrene
42397-65-9	1,8-Dinitropyrene
193-39-5	Indeno(1,2,3-cd)pyrene
56-49-5	3-Methylcholanthrene
3697-24-3	5-Methylchrysene
7496-02-8	6-Nitrochrysene
5522-43-0	1-Nitropyrene
57835-92-4	4-Nitropyrene

N725 Selenium Compounds. *Includes any unique chemical substance that contains selenium as part of that chemical's infrastructure.*

N740 Silver Compounds. *Includes any unique chemical substance that contains silver as part of that chemical's infrastructure.*

N746 Strychnine and salts. *Includes any unique chemical substance that contains strychnine or a strychnine salt as part of that chemical's infrastructure.*

N760 Thallium Compounds. *Includes any unique chemical substance that contains thallium as part of that chemical's infrastructure.*

N770 Vanadium Compounds. *Includes any unique chemical substance that contains vanadium as part of that chemical's infrastructure.*

N874 Warfarin and salts. *Includes any unique chemical substance that contains warfarin or a warfarin salt as part of that chemical's infrastructure.*

N982 Zinc Compounds. *Includes any unique chemical substance that contains zinc as part of that chemical's infrastructure.*

For more details on how to report TRI chemicals and chemical categories, see http://www2.epa.gov/toxics-release-inventory-tri-program/reporting-tri-facilities

EPA has more detailed chemical-specific guidance documents for the EPCRA Section 313 chemical categories on its webpage http://www2.epa.gov/toxics-release-inventory-tri-program/guidance-documents-tri-reporting#chemical_sp. Documents are available for:

- Lead and Lead Compounds
- Mercury and Mercury Compounds
- Polycyclic Aromatic Compounds
- Pesticides and Other Persistent Bioaccumulative Toxic (PBT) Chemicals
- Dioxin and Dioxin-like Compounds Category
- Aqueous Ammonia
- Nitrate compounds
- Hydrochloric acid aerosols
- Sulfuric acid aerosols
- Certain glycol ethers
- Chlorophenols
- List of Toxic Chemicals within Ethylenebisdithiocarbamic Acid, Salts and Esters Category and List of Mixtures that Contain the Individually listed Chemicals Maneb, Metiram, Nabam, and Zineb
- Nicotine and salts
- Polychlorinated alkanes
- Strychnine and salts
- Warfarin and salts

APPENDIX E

CERCLA Hazardous Substances - Chemical Categories

This appendix provides further definition or clarification, where available, of CERCLA chemical categories that are listed with N.A. as the CAS Registry Number in the consolidated list. Dichlorobenzidine and diphenylhydrazine are also included in this appendix for completeness sake because they are listed on the consolidated list with CAS No. of N.A., although technically each is not considered a category containing several chemical substances. Many chemicals that are also members of a category may also be listed separately as a CERCLA chemical with its own RQ. For example, cobaltous bromide, CAS 7789-43-7, appears on the CERCLA list separately.

Radionuclides listed under CERCLA are provided in a separate list in Appendix B of this document, with RQs in Curies. EPCRA section 313 (TRI) Chemical Category definitions are found in Appendix C.

Each CERCLA chemical category in this appendix was designated as a CERCLA hazardous substance based on a statutory source (See NOTE following 40 CFR 302.4 (b)). The statutory Codes (1), (2), (3), or (4), shown after each category name, refers to a statutory source, listed in the table below.

Statutory Code	Statutory Source	Applicable CFR citation
(1)	Section 311(b)(2) of the Clean Water Act	Hazardous Substances 40 CFR 116.4
(2)	Section 307(a) of the Clean Water Act	Priority Toxic Pollutants 40 CFR 401.15
(3)	Section 112 of the Clean Air Act	Hazardous Air Pollutants List- Section 112(b)(1) of CAA Revisions to List 40 CFR 60.60-63
(4)	Section 3001 of RCRA	Hazardous Wastes 40 CFR 261.33(e) and (f) (“P” and “U” Haz. Waste chemicals)

Endnote reference letters refer to sources of information used to define or clarify the category. These endnote references appear at the end of the appendix.

Arsenic and Compounds (2), (3)

Unless otherwise specified, this listing is defined as including any unique chemical substance that contains arsenic as part of that chemical's infrastructure.[a]

Arsenic Compounds (inorganic including arsine)[b]

Antimony and Compounds (2), (3)

Unless otherwise specified, this listing is defined as including any unique chemical substance that contains antimony as part of that chemical's infrastructure.[a] For antimony and compounds, the term *compounds* shall include organic and inorganic compounds. [c]

Beryllium and Compounds (2), (3)

Unless otherwise specified, this listing is defined as including any unique chemical substance that contains beryllium as part of that chemical's infrastructure.[a]

Cadmium and Compounds (2), (3)

Unless otherwise specified, this listing is defined as including any unique chemical substance that contains cadmium as part of that chemical's infrastructure.[a]

Chromium and Compounds (2), (3)

Unless otherwise specified, this listing is defined as including any unique chemical substance that contains chromium as part of that chemical's infrastructure.[a]

Chlorinated Benzenes (2)

Chlorobenzene[d]
1,2-dichlorobenzene[d]
1,3-dichlorobenzene[d]
1,4-dichlorobenzene[d]
1,2,4-trichlorobenzene[d]
Hexachlorobenzene[d]

Chlorinated Ethanes (2)

Chloroethane[d]
l,l-dichloroethane[d]
1,2-dichloroethane[d]
l,l,l-trichloroethane[d]
1,1,2-trichloroethane[d]
1,1,2,2-tetrachloroethane[d]
Hexachloroethane[d]

Chlorinated Phenols (2)

2-chlorophenol[d]
2,4-dichlorophenol[d]
2,4,6-trichlorophenol[d]
Parametachlorocresol (4-chloro-3-methyl phenol)[d]

Chloroalkyl Ethers (2)

Bis(2-chloroethoxy)methane[d]
Bis(2-chloroethyl) ether[d]
2-chloroethyl vinyl ether (mixed)[d]

Cobalt and Compounds (3)

Unless otherwise specified, this listing is defined as including any unique chemical substance that contains cobalt as part of that chemical's infrastructure.[a]

Coke Oven Emissions (3)

Copper and Compounds (2)

Creosote (4)

RCRA Toxic hazardous waste code U051 40 CFR 261.33(f)

Creosote, as defined by the American Wood Preservers Association, is a distillate derived from coal tar, derived by the high temperature carbonization of bituminous coal. Creosote consists primarily of liquid, solid polycyclic aromatic hydrocarbons (PAHs), other heteronuclear aromatic substances, and some tar acids and bases. Creosote Oil (Common Name) has the following active ingredients:

Coal Tar	CAS Number 8007-45-2
Creosote Oil	CAS Number 61789-28-4
Coal Tar Creosote	CAS No. 8001-58-9

Currently there are thirteen creosote industrial wood preservative products registered as pesticides with USEPA under FIFRA. All have "creosote" as part of the product name.[e]

Cyanides (2), (3)

Cyanide and Compounds (2), (3)

X'CN where X = H' or any other group where a formal dissociation may occur. For example KCN or $Ca(CN)_2$.[f]

Cyanides (soluble salts and complexes, not otherwise specified) P030 Haz. Waste (4)

DDT and Metabolites (2)

4,4-DDT[d]
4.4-DDE (p,p-DDX)[d]
4,4-DDD (p,p-TDE)[d]

DDT means the compounds DDT, DDD, and DDE as identified by the chemical names:(DDT)-1,1,1-trichloro-2,2-bis(p-chlorophenyl) ethane and some o,p′-isomers; (DDD) or (TDE)-1,1-dichloro-2,2-bis(p-chlorophenyl) ethane and some o,p′-isomers; (DDE)-1,1-dichloro-2,2-bis(p-chlorophenyl) ethylene.[g]

Dichlorobenzidine (2)

3,3-dichlorobenzidine[d]

Diphenylhydrazine (2)

1,1-diphenylhydrazine[d]

Endosulfan and Metabolites (2)

Alpha-endosulfan[d]
Beta-endosulfan[d]
Endosulfan sulfate[d]

Endrin and metabolites (2)

Endrin[d]
Endrin aldehyde[d]

Endrin means the compound endrin as identified by the chemical name 1,2,3,4,10,10-hexachloro-6,7-epoxy-1,4,4a,5,6,7,8,8a-octahydro-1,4-endo-5,8-endodimethanonaphthalene.[g]

Fine Mineral Fibers (3)

Includes mineral fiber emissions from facilities manufacturing or processing glass, rock, or slag fibers (or other mineral derived fibers) of average diameter 1 micrometer or less.[f]

Glycol Ethers (3)

Glycol ethers include mono- and di-ethers of ethylene glycol, diethylene glycol, and triethylene glycol R-$(OCH_2CH_2)_n$-OR′. Where:

n = 1, 2, or 3;
R = alkyl C7 or less; or
R = phenyl or alkyl substituted phenyl;
R′= H or alkyl C7 or less; or
OR′ consisting of carboxylic acid ester, sulfate, phosphate, nitrate, or sulfonate.[h]

The substance ethylene glycol monobutyl ether (EGBE,2-Butoxyethanol) (CAS Number 111–76–2) is deleted from the list of hazardous air pollutants established by 42 U.S.C. 7412(b)(1)[Section 112(b)(1) of CAA].[i]

Haloethers (2)

4-chlorophenyl phenyl ether[d]
2-bromophenyl phenyl ether[d]
Bis(2-chloroisopropyl) ether[d]

Haloethers (other than those listed elsewhere; includes chlorophenylphenyl ethers, bromophenylphenyl ether, bis(dichloroisopropyl) ether, bis-(chloroethoxy) methane and polychlorinated diphenyl ethers).[j]

Halomethanes (2)

Methylene chloride (dichloromethane)[d]
Methyl chloride (chloromethane)[d]
Methyl Bromide (bromomethane)[d]
Bromoform (tribromomethane)[d]
Dichlorobromomethane[d]
Chlorodibromomethane[d]

Halomethanes (other than those listed elsewhere; includes methylene chloride, methylchloride, methylbromide, bromoform, dichlorobromomethane.[j]

Heptachlor and Metabolites (2)

Heptachlor[d]
Heptachlor epoxide (BHC-hexachlorocyclohexane)[d]

Lead and Compounds (2), (3)

Unless otherwise specified, this listing is defined as including any unique chemical substance that contains lead as part of that chemical's infrastructure.[a]

Manganese and Compounds (3)

Unless otherwise specified, this listing is defined as including any unique chemical substance that contains manganese as part of that chemical's infrastructure.[a]

Mercury and Compounds (2), (3)

Unless otherwise specified, this listing is defined as including any unique chemical substance that contains mercury as part of that chemical's infrastructure.[a]

Nickel and Compounds (2), (3)

Unless otherwise specified, this listing is defined as including any unique chemical substance that contains nickel as part of that chemical's infrastructure.[a]

Nitrosamines (2)

N-nitrosodimethylamine[d]
N-nitrosodiphenylamine[d]
N-nitrosodi-n-propylamine[d]

Nitrophenols (other than chlorinated) (2)

2-nitrophenol[d]
4-nitrophenol[d]
2,4-dinitrophenol[d]
4,6-dinitro-o-cresol (4,6-dinitro-2-methylphenol)[d]
Pentachlorophenol[d]
Phenol[d]
2,4-dimethylphenol[d] Nitrophenols (including 2,4-dinitrophenol, dinitrocresol).[j]

Phthalate Esters (2)

Bis(2-ethylhexyl)phthalate[d]
Butyl benzyl phthalate[d]
Di-N-butyl phthalate[d]
Di-n-octyl phthalate[d]
Diethyl phthalate[d]
Dimethyl phthalate[d]

Polychlorinated Biphenyls (PCBs) (1), (2), (3)

PCB-1242 (Arochlor 1242)[d]
PCB-1254 (Arochlor 1254)[d]
PCB-1221 (Arochlor 1221)[d]
PCB-1232 (Arochlor 1232)[d]
PCB-1248 (Arochlor 1248)[d]
PCB-1260 (Arochlor 1260)[d]
PCB-1016 (Arochlor 1016)[d]

Polychlorinated Biphenyls (PCBs) means a mixture of compounds composed of the biphenyl molecule which has been chlorinated to varying degrees.[g]

Polycyclic Organic Matter (3)

Includes organic compounds with more than one benzene ring, and which have a boiling point greater than or equal to 100º C.[f]

Polynuclear Aromatic Hydrocarbons (PAHs) (2)

Acenaphthene[d]
1,2-benzanthracene (benzo(a) anthracene)[d]
Benzo(a)pyrene (3,4-benzo-pyrene)[d]
3,4-benzofluoranthene (benzo(b) fluoranthene)[d]
11,12-benzofluoranthene (benzo(k) fluoranthene)[d]
Chrysene[d]
Acenaphthalene[d]
Anthracene[d]
1,12-benzoperylene (benzo (ghi) perylene)[d]
Fluorene[d]
Fluoranthene[d]
Phenanthrene[d]
1,2,5,6-bibenzanthracene (dibenzo(ah) anthracene)[d]
Indeno (1,2,3-cd) pyrene (2,3-o-phenylene pyrene)[d]
Pyrene[d]

Polynuclear aromatic hydrocarbons (including benzanthracenes, benzopyrenes, benzofluoranthene, chrysenes, dibenz-anthracenes, and indenopyrenes).[j]

Radionuclides (3) See Appendix B in this document.

A type of atom which spontaneously undergoes radioactive decay.[f]

Selenium and Compounds (2), (3)

Unless otherwise specified, this listing is defined as including any unique chemical substance that contains selenium as part of that chemical's infrastructure.[a]

Silver and Compounds (2), (3)

Unless otherwise specified, this listing is defined as including any unique chemical substance that contains silver as part of that chemical's infrastructure.[a]

Thallium and Compounds (2)

Zinc and Compounds (2)

Endnote References

---

[a] 42 U.S.C. 7412(b)(1)-[Section 112(b)(1) of CAA] "NOTE" after the Initial List of Pollutants: *For all listings above which contain the word "compounds" … the following applies: Unless otherwise specified, these listings are defined as including any unique chemical substance that contains the named chemical (i.e., antimony, arsenic, etc.) as part of that chemical's infrastructure.*

[b] 42 U.S.C. 7412(b)(1)-[Section 112(b)(1) of CAA] Initial List of Pollutants.

[c] 40 CFR 401.15 footnote 2 (for antimony and compounds only).

[d] USEPA. 1994. Water Quality Standards Handbook, Second Edition, Appendix P- List of 126 CWA Section 307(a) Priority Toxic Pollutants. http://water.epa.gov/scitech/swguidance/standards/handbook/

[e] USEPA. Sept 2008. Reregistration Eligibility Decision for Creosote (Case 0139). http://www.epa.gov/oppsrrd1/reregistration/REDs/creosote_red.pdf

[f] 42 U.S.C. 7412(b)(1)-[Section 112(b)(1) of CAA] Footnotes after Initial List of Pollutants.

[g] 40 CFR 129.4 Toxic Pollutants.

[h] 40 CFR 63.62 Redefinition of glycol ethers.

[i] 40 CFR 63.63 Hazardous Air Pollutants.

[j] 40 CFR 401.15 Toxic Pollutants List.

APPENDIX 19

AGENCY GUIDANCE MEMOS

- **US COAST GUARD DEFINITION OF OIL**
- **EPA MEMO - SECONDARY CONTAINMENT**
- **EPA MEMO - SPCC INDUSTRY QUESTIONS**

List of Petroleum and Non-petroleum Oils

This list of oils is organized alphabetically into several subgroups. Crude oil and refined petroleum products are among the most familiar types of oils. Petroleum and fuel oil are specifically named in the Clean Water Act (CWA) definition of oil. Edible animal and vegetable oils and other oils of animal or vegetable origin have historically been considered CWA oils. Other non-petroleum oils are substances that have the properties and behavior of traditional oils and have historically been considered to be oils. Lube-oil additives are included in the list of oils because they may be shipped or stored in an oil medium. Some substances that have not been considered oils historically may be added to this list in the future if they are determined to have oil-like characteristics. If you have a question about whether a commodity that does not appear on this list is regulated as an oil, please call **Mr. Patrick Keffler, CG-ENG-5, at (202) 372-1424**.

Crude Oil and Refined Petroleum Products

- Alkanes (C6-C9)
- n-Alkanes (C10+)
- iso- & cyclo-Alkanes (C10-C11)
- Alkylbenzenes (C9+)
- Alkylbenzene, Alkylindane, Alkylindene mixture (each C12-C17)
- Asphalt
- Asphalt: cutback
- Asphalt: emulsion
- Asphalt blending stocks: Roofers flux
- Asphalt blending stocks: Straight run residue
- Aviation alkylates
- Cobalt naphthenate in Solvent naphtha
- p-Cymene
- Diisopropyl naphthalene
- Distillates: Flashed feed stocks
- Distillates: Straight run
- Ethyl cyclohexane
- Gas oil: Cracked
- Gasoline: Automotive (not over 4.23g Pb/gal)
- Gasoline: Aviation (not over 4.86g Pb/gal)
- Gasoline: Casinghead (natural)
- Gasoline: Polymer
- Gasoline: Straight run
- Gasoline blending stocks: Alkylates
- Gasoline blending stocks: Reformates
- Heptane (all isomers)
- Heptene (all isomers)
- Hexane (all isomers)
- Hexene (all isomers)
- Jet fuel: Jet A-1
- Jet fuel: Jet A

- Jet fuel: Jet B
- Jet fuel: JP-4
- Jet fuel: JP-5 (Kerosene, heavy)
- Jet fuel: JP-8
- Kerosene
- Methylcyclohexane
- Mineral spirits
- Naphtha: Heavy
- Naphtha: Paraffinic
- Naphtha: Petroleum
- Naphtha: Solvent
- Naphtha: Stoddard solvent
- Naphtha: VM & P (75% Naphtha)
- Nonane (all isomers)
- Nonylbenzene
- Octane (all isomers)
- Oil, fuel: No. 1
- Oil, fuel: No. 1-D
- Oil, fuel: No. 2
- Oil, fuel: No. 2-D
- Oil, fuel: No. 4
- Oil, fuel: No. 5
- Oil, fuel: No. 6
- Oil, misc: Aliphatic
- Oil, misc: Aromatic
- Oil, misc: Clarified
- Oil, misc: Coal
- Oil, misc: Crude
- Oil, misc: Diesel
- Oil, misc: Gas, low pour
- Oil, misc: Gas, low sulfur
- Oil, misc: Heartcut distillate
- Oil, misc: Lubricating
- Oil, misc: Mineral
- Oil, misc: Mineral seal
- Oil, misc: Motor
- Oil, misc: Penetrating
- Oil, misc: Residual
- Oil, misc: Road
- Oil, misc: Seal
- Oil, misc: Spindle
- Oil, misc: Transformer
- Oil, misc: Turbine
- Olefin mixtures (C5-C7)
- alpha-Olefins (C6-C18) mixtures
- Olefins (C13+)

- Pentene (all isomers)
- 1-Phenyl-1-xylyl ethane
- iso-Propylcyclohexane
- Tetrahydronaphthalene
- White spirit (low (15-20%) aromatic)

Edible Animal and Vegetable Oils

- Oil, edible: Beechnut
- Oil, edible: Castor
- Oil, edible: Cocoa butter
- Oil, edible: Coconut
- Oil, edible: Cod liver
- Oil, edible: Corn (maize)
- Oil, edible: Cottonseed
- Oil, edible: Fish
- Oil, edible: Groundnut
- Oil, edible: Hazelnut
- Oil, edible: Lard
- Oil, edible: Nutmeg butter
- Oil, edible: Olive
- Oil, edible: Palm
- Oil, edible: Palm kernel
- Oil, edible: Peanut
- Oil, edible: Peel
- Oil, edible: Poppy
- Oil, edible: Poppy seed
- Oil, edible: Raisin seed
- Oil, edible: Rapeseed
- Oil, edible: Rice bran
- Oil, edible: Safflower
- Oil, edible: Salad
- Oil, edible: Sesame
- Oil, edible: Soya bean
- Oil, edible: Sunflower seed
- Oil, edible: Tucum
- Oil, edible: Vegetable
- Oil, edible: Walnut

Other Oils of Animal or Vegetable Origin

- Animal and Fish oils, n. o. s.
- Animal and fish acids oils and distillates, n. o. s.
- Camphor oil
- Cashew nut shell oil (untreated)
- Creosote (wood)

- Fatty acid (saturated, C13+)
- Fatty acid amides
- Oil, misc: Animal
- Oil, misc: Coconut, fatty acid methyl ester
- Oil, misc: Coconut oil, fatty acid
- Oil, misc: Cottonseed oil, fatty acid
- Oil, misc: Lanolin
- Oil, misc: Linseed
- Oil, misc: Neatsfoot
- Oil, misc: Oiticica
- Oil, misc: Palm oil, fatty acid methyl ester
- Oil, misc: Perilla
- Oil, misc: Pilchard
- Oil, misc: Pine
- Oil, misc: Rosin
- Oil, misc: Soapstock
- Oil, misc: Soybean (epoxidized)
- Oil, misc: Sperm
- Oil, misc: Tall
- Oil, misc: Tall, fatty acid
- Oil, misc: Tallow
- Oil, misc: Tung
- Oil, misc: Whale
- Palm kernel acid oil
- Palm kernel acid oil, methyl ester
- Palm Olein
- Palm Stearin
- Palm Fatty Acid Distillate
- Tallow fatty acid
- Tallow nitrile
- Turpentine
- Vegetable acid oils and distillates, n. o. s.
- Vegetable oils, n. o. s.

Other Non-Petroleum Oils

- Anthracene oil (Coal tar fraction)
- Coal tar
- Coal tar pitch (molten)
- Creosote (Coal tar)
- Naphtha: Coal tar solvent
- Polydimethylsiloxane

Lube-Oil Additives

- Alkaryl polyether (C9-C20)

- Alkenyl (C11+) amide
- Alkyl (C8+) amine, alkenyl (C12+) acid ester mixture
- Alkyl (C11-C17) benzene sulfonic acid
- Alkylbenzene sulfonic acid, sodium salt solution
- Alkyl dithiothiadiazole (C6-C24)
- Alkyl (C8-C40) phenol sulfide
- Alkyl (C8-C9) phenylamine in aromatic solvents
- Alkyl (C10-C20), saturated and unsaturated) phosphite
- Aryl polyolefin (C11-C50)
- Calcium alkyl (C9) phenol sulfide, polyolefin phosphorosulfide mixture
- Calcium long chain alkaryl sulfonate (C11-C50)
- Calcium long chain alkyl (C5-C10) phenate
- Calcium long chain alkyl (C11-C40) phenate
- Calcium long chain alkyl phenate sulfide (C8-C40)
- Calcium long chain alkyl salicylate (C13+)
- Calcium long chain alkyl phenolic amine (C8-C40)
- Chlorinated paraffins (C18+) with any level of chlorine
- Dialkyl (C8-C9) diphenylamines
- Dibutyl hydrogen phosphonate
- Diphenylamine, reaction product with 2, 2, 4-Trimethylpentene
- Diphenylamines, alkylated
- Dodecyl hydroxypropyl sulfide
- Glycerol monooleate
- Long chain alkaryl polyether (C11-C20)
- Long chain alkaryl sulfonic acid (C16-C60)
- Long chain alkylphenate/Phenol sulfide mixture
- Magnesium long chain alkaryl sulfonate (C11-C50)
- Magnesium long chain alkyl salicylate (C11+)
- Olefin/Alkyl ester copolymer (molecular weight 2000+)
- Oleylamine
- Phosphate esters, alkyl (C12-C14) amine
- Polyalkyl (C10-C20) methacrylate
- Polyether (molecular weight 2000+)
- Polyether, borated
- Polyisobutenyl anhydride adduct
- Polyolefin (molecular weight 300+)
- Polyolefin amide alkeneamine (C28+)
- Polyolefin amide alkeneamine borate (C28-C250)
- Polyolefin amide alkeneamine molybdenum oxysulfide mixture
- Polyolefin amide alkeneamine polyol
- Polyolefinamine (C28-C250)
- Polyolefinamine in alkyl (C2-C4) benzenes
- Polyolefin aminoester salt
- Polyolefin anydride
- Polyolefin ester (C28-C250)
- Polyolefin phenolic amine (C28-C250)

- Polyolefin phosphorosulfide – Barium derivative (C28-C250)
- Sodium petroleum sulfonate
- Sulfohydrocarbon (C3-C88)
- Sulfohydrocarbon, long chain (C18+_ alkylamine mixture
- Sulfurized fat (C14-C20)
- Sulfurized polyolefinamide alkene (C28-C250) amine
- Tall oil fatty acid, barium salts
- Zinc alkaryl dithiophosphate (C7-C16)
- Zinc alkyl dithiophosphate (C3-C14)

UNITED STATES ENVIRONMENTAL PROTECTION AGENCY
WASHINGTON, D.C. 20460

AUG - 9 2002

OFFICE OF
SOLID WASTE AND EMERGENCY
RESPONSE

OSWER 9360.8-38

MEMORANDUM

SUBJECT: Use of Alternative Secondary Containment Measures at Facilities Regulated under the Oil Pollution Prevention Regulation (40 CFR Part 112)

FROM: Marianne Lamont Horinko
Assistant Administrator

TO: Oil National Policy Managers, Regions 1-10

PURPOSE

This memorandum amends the guidance issued on April 29, 1992 (i.e., Use of Alternative Secondary Containment Measures at Facilities Regulated under the Oil Pollution Regulation (40 CFR Part 112), (OSWER 9360.8-37) concerning the potential use of certain double-wall aboveground storage tanks (ASTs) for secondary containment purposes. A copy is attached for your reference. This guidance also clarifies when shop-built double-walled ASTs satisfy the applicable secondary containment requirements in the Spill Prevention, Control, and Countermeasure (SPCC) rule, found at 40 CFR part 112. We take this step because larger shop-built ASTs that use the protective measures described in the 1992 guidance are generally protective of the environment under certain circumstances.

BACKGROUND

On April 29, 1992, EPA issued guidance on how certain shop-built double-wall ASTs may comply with the secondary containment requirements of §112.7(c). The guidance discussed compliance with §112.7(c) only, and did not discuss compliance with other applicable SPCC provisions. We said at the time that "there should be many situations in which protection of navigable waters substantially equivalent to that provided by the secondary containment systems listed in section 112.7(c) could be provided by alternative AST systems that have capacities generally less than 12,000 gallons and are installed and operated with protective measures other than secondary containment dikes."

DISCUSSION

SPCC secondary containment requirements. Section 112.7(c) requires that the owner or operator:

> "Provide appropriate containment and/or diversionary structures or equipment to prevent a discharge as described in §112.1(b). The entire containment system, including walls and floor, must be capable of containing oil and must be constructed so that any discharge from a primary containment system, such as a tank or pipe, will not escape the containment system before cleanup occurs. At a minimum, you must use one of the following preventive systems or its equivalent:
>
> (1) For onshore facilities:
> (i) Dikes, berms or retaining walls sufficiently impervious to contain oil;
> (ii) Curbing;
> (iii) Culverting, gutters or other drainage systems;
> (iv) Weirs, booms or other barriers;
> (v) Spill diversion ponds;
> (vi) Retention ponds; or
> (vii) Sorbent materials.
> (2) For offshore facilities:
> (i) Curbing, drip pans; or
> (ii) Sumps and collection systems."

After nearly a decade of evaluation of the construction, performance, and use of certain shop-built double-wall ASTs, we believe that they may serve as an "equivalent" preventive system for purposes of §112.7(c).

In 1992, we recognized that a shop-built double-wall AST with a capacity "generally less than 12,000 gallons" that was installed and operated with protective measures other than a secondary containment dike might meet the secondary containment requirements of §112.7(c). We described those protective measures as "when the inner tank is an Underwriters' Laboratory-listed steel tank, the outer wall is constructed in accordance with nationally accepted industry standards (e.g., those codified by the American Petroleum Institute, the Steel Tank Institute, and the American Concrete Institute), the tank has overfill prevention measures that include an overfill alarm and an automatic flow restrictor or flow-shutoff, and all product transfers are constantly monitored."

Today, after nearly a decade of experience in which we have seen the construction, performance, and use of shop-built double-wall ASTs, we note a low

occurrence of discharges from such tanks, including tanks with a capacity of 12,000 gallons or more. In some cases, such tanks provide secondary containment where none existed before, or superior environmental protection to alternative containment systems previously used. We believe that a 12,000 gallon limitation on the use of certain shop-built double-wall ASTs is therefore no longer necessary, and believe that shop-built double-wall ASTs that use the protective measures described in 1992 generally satisfy the secondary containment requirements found in §112.7(c).

Bulk storage secondary containment requirements (§112.8(c)(2)); inspection requirements (§112.8(c)(6)). For the same reasons outlined above, we also believe that shop-fabricated double-wall AST, regardless of size, may generally satisfy not only the secondary containment requirements of §112.7(c), but also the bulk storage secondary containment requirements found at §112.8(c)(2). Section 112.8(c)(6) requires the owner or operator to conduct integrity testing on a regular schedule and whenever he makes repairs. The owner or operator must also frequently inspect the outside of the container for signs of deterioration, discharges, or accumulation of oil inside diked areas. To comply with the requirement to frequently inspect the outside of the tank, an owner or operator must inspect the inner wall and interstitial spaces of a shop-built double-wall AST. We recommend the use of automatic detection devices to detect discharges into the interstitial space. Owners or operators should conduct this integrity testing and inspection in accordance with industry standards, when practicable. One industry standard presently available is "SP001-00, Standard for Inspection of In-Service Shop-Fabricated Aboveground Tanks for Storage of Combustible and Flammable Liquids." Other applicable standards may be developed in the future.

Other applicable SPCC requirements. While shop-fabricated double-wall ASTs may satisfy the requirements of §112.7(c) and §112.8(c)(2), such tanks must also continue to satisfy all other applicable SPCC requirements. For example, the facility owner or operator must satisfy §112.7(h) requirements for tank car and tank truck loading/unloading racks if he transfers oil in bulk to those tanks from highway vehicles or railroad cars. If such transfers occur, where loading/unloading area drainage does not flow into a catchment basin or treatment facility designed to handle spills, a quick drainage system must be used. The containment system must be designed to hold at least the maximum capacity of any single compartment of a tank car of tank truck loaded or unloaded at the facility.

Additionally, any piping, equipment, or device not contained within a double-wall AST is subject to the requirements of §112.8(b)(3) and (4), if such piping, equipment, or device is in an undiked area.

CONCLUSION/IMPLEMENTATION Should you have any questions concerning this memorandum, please contact Hugo Fleischman, of my staff, at 703-603-8769.

OSWER 9360.8-38

Attachment

cc: Michael B. Cook
Elaine Davies
Andrew Gordon
David Drelich
Oil Removal Managers
OERR Records Manager, IMC 5202G
OERR Documents Coordinator, HOSC 5202G
Jeff Josephson, Superfund Lead Region Coordinator, USEPA Region 2
NARPM Co-Chairs
Doug Kodama, Oil Lead Region Coordinator, USEPA Region 2

UNITED STATES ENVIRONMENTAL PROTECTION AGENCY
WASHINGTON, D.C. 20460

SEP 30 2002

OFFICE OF
SOLID WASTE AND EMERGENCY
RESPONSE

MEMORANDUM

SUBJECT: Industry Questions on the Oil Spill Prevention, Control, and Countermeasure Rule

FROM: Marianne Lamont Horinko,
Assistant Administrator

TO: Karen V. Brown, Director
Small Business Division
Small Business Ombudsman

Thank you for your memorandum of August 14,2002, forwarding questions from the Petroleum Marketers Association of America (PMAA), the Society of Independent Gasoline Marketers Association (SIGMA), the Petroleum Marketers and Convenience Stores of Iowa (PMCI), and the Independent Lubricant Manufacturers Association (ILMA). We will refer to these groups collectively as the "Marketers," as you did. The Marketers seemed concerned about the impact on their members of "new" revisions to the Oil Spill Prevention, Control, and Countermeasure (SPCC) rule. We note at the outset that there are few new requirements in the revised SPCC rule. Most of the changes are editorial clarifications of requirements that have existed since 1974.

The revised SPCC rule, published in the Federal Register on July 17, 2002, provides substantial relief to industry, particularly small business, while maintaining environmental protection. The revisions to the rule clarify that the rule is mandatory, answer many questions posed by commenters, and provide performance-based flexibility to facilities to follow the dictates of good engineering practice.

Small business benefits from many rule revisions. Revisions to the rule relieve many small facilities of the burden of preparing and implementing SPCC Plans by raising the regulatory threshold, establishing a minimum container size subject to

Recycled/Recyclable • Printed with Vegetable Oil Based Inks on 100% Recycled Paper (40% Postconsumer)

regulation, exempting facilities subject to all of the technical requirements of 40 CFR part 280 and 281 (mainly small gasoline stations), and exempting wastewater facilities The exemptions have the effect of reducing the number of regulated facilities by approximately 55,000. Most of them are small businesses.

The revisions also simplify the paperwork requirements by approximately 40% and cut costs for those facilities remaining subject to the rule. They codify that a facility owner or operator has the flexibility to implement good engineering practice by deviating from rule provisions as long as the deviation provides equivalent environmental protection.

The reduction in size of the regulated community due to final rule revisions will lead to a capital-cost savings of approximately $29.47 million per year. During the first year, regulated facilities will experience an increase in total paperwork cost burden of $21.93 million due primarily to the need to read the rule. However, during the second year, total paperwork cost burden will decrease by about $60.21 million, and beginning in the third year following the rulemaking, the total paperwork cost burden to all regulated facilities will decrease by about $45.03 million. The result is an aggregate cost savings of about $7.56 million during the first year, $89.69 million during the second year, and $74.51 million during subsequent years.

We have carefully considered the Marketers' questions and provide written answers below. Citations refer to relevant SPCC sections.

1. Question. Section 112.8(c)(2). What must a bulk plan owner do to "constrain precipitation" in cases of containment areas filled with ice, snow and water in winter, and how often must the containment area be cleared?

Answer. Since 1974, bulk storage facilities have been required to have secondary containment sufficient for the contents of the largest container and freeboard for precipitation. Additionally, these facilities also still must meet the secondary containment requirements of the local fire codes and National Fire Protection Association (NFPA) Standard 30, which have similar design requirements. Under §112.8(c)(2), if the owner or operator cannot provide secondary containment, because it is impracticable from an engineering standpoint, he must provide a contingency plan and take other such actions as are required by §112.7(d). If rain, ice, or snow fill the secondary containment systems in winter, then such systems might not have the required capacity. The question then arises: does the presence of rain, ice, or snow constitute a reason to determine that secondary containment is impracticable from an engineering standpoint?

A determination of impracticability from an engineering standpoint involves examination of whether space or other geographic limitations of the facility would

accommodate secondary containment or if local zoning ordinances or fire prevention standards or safety considerations would not allow secondary containment; or, if installing secondary containment would defeat the overall goal of the regulation to prevent discharges as described in §112.1(b). Therefore, the mere presence of rain, ice, or snow within the secondary containment system may not be considered in the original determination of whether secondary containment is impracticable from an engineering standpoint. Thus, containment must be properly sized for all precipitation events (i.e., rain and snow). However, the owner or operator may explain in the SPCC Plan that during certain times of the year a contingency plan may be used to supplement the lack of capacity experienced during these weather conditions, when sufficient secondary containment becomes impracticable.

2. Question. The final rule allows for certain SPCC guidelines not to be adopted and to be simply noted and explained in the facility's Plan; however, the rule also allows an EPA inspector to disagree and require the SPCC Plan to be amended. Will penalties be imposed on owners in cases where a PE certification of the lack of need to include a SPCC guideline is refuted by EPA? How long does the owner/operator have to make changes based on such reversal?

Answer. The final rule does not permit a facility owner or operator to disregard any SPCC guidelines and to simply note and explain such disregard in the facility's SPCC Plan (Plan). The revised rule does, however, allow for deviations (see §112.7(a)(2)) for most rule requirements except those dealing with secondary containment; and allows the use of contingency planning combined with integrity testing in lieu of the secondary containment requirements when secondary containment is impracticable from the standpoint of good engineering practice (see §112.7(d)). A requirement that is not applicable to a facility must be noted in the SPCC plan with an explanation as to why it is not applicable.

An owner or operator does not need to submit a deviation determination to the EPA Regional Administrator (RA). If, however, the RA becomes aware of such a deviation because of a facility inspection, for example, he may require an owner or operator to amend his Plan if he finds that it does not meet the requirements of 40 CFR part 112 or that an amendment is necessary to prevent and contain discharges from the facility. The RA must notify the owner or operator of EPA's intent to require Plan amendment and specify the terms of such proposed amendment. Within 30 days of receipt of such notice, the owner or operator may submit written information, views, and arguments on the proposed amendment. After considering all relevant material presented, the RA must notify the owner or operator of any amendment required or rescind the notice. The owner or operator then has 30 days to amend, unless the RA, for good cause, specifies another effective date. The owner or operator must implement the amended Plan as soon as possible, but not later than six months after amendment, unless the RA specifies another date.

The owner or operator may appeal, within 30 days of receipt of the RA's decision, any decision of the RA requiring Plan amendment to the EPA Administrator. The EPA Administrator has 30 days from receipt of the notice of appeal to make a decision on that appeal. EPA will not impose penalties for failure to amend a Plan until the owner or operator has failed to comply with a final decision requiring Plan amendment, but any failed appeal will not extend a compliance deadline.

3. Question. Section 112.7(g)(1). Must each facility be fully fenced? The new rule says each facility "must" be fenced; the original rule says "should" be fenced. Based on the original "should" language, most plants conform to the Uniform Fire Code which requires fencing unless isolation (rural), natural barriers or other factors adequately address public safety. Is fencing now required?

> The Uniform Fire Code requires loading/unloading entirely within the fence. Complying with these requirements would require very large enclosures with multiple gates if all facilities must now be fenced. Many properties are not large enough to comply with the Uniform Fire Code under these SPCC requirements. What compliance alternative(s) could rural plants use to meet SPCC fencing requirements?

Answer. Yes, a facility (except a production facility) is required to provide fencing and such is the case both under the current and former rule. In accordance with §112.7(g), facility handling, processing, and storage must be fully fenced. Fencing helps to deter vandals and thus prevent the discharges that they might cause. If any form of fencing is impractical, the owner or operator may explain his reasons for nonconformance with the rule and provide equivalent environmental protection by some other means in accordance with §112.7(a)(2).

EPA has always considered that §112.3 of the SPCC rule requires that SPCC Plans be prepared in accordance with §112.7, which in turn requires that Plans be prepared in accordance with good engineering practice. However, clarification of the rule was necessary because of confusion on the part of some facility owners or operators who have interpreted the former rule's use of the words "should" and "guidelines" in §112.7 as an indication that compliance with the applicable provisions of the rule is optional. The rule used the words "should" and "guidelines" to provide flexibility for facilities with unique circumstances. Those circumstances might be such that mandated regulatory provisions would not be in accord with good engineering practice. Therefore, the rule gave facilities the opportunity to provide alternative methods that achieve equivalent environmental protection, or to show that the provisions were inapplicable based on specific circumstances.

In 1991, EPA proposed to clarify the regulations by generally substituting "shall" in place of "should" throughout the reorganized rule. In the final rule, EPA editorially

changed "shall" to "must" in furtherance of the Agency's "plain language" objectives. The "shall" to "must" is not a substantive change but merely an editorial change. It will not add to the information collection burden. We have always included requirements prefaced by "should" in the information collection burden for the rule. The Agency will continue to provide flexibility for an owner or operator who can explain his reasons for nonconformance with rule requirements and can provide alternate measures from those specified in the rule which achieve equivalent environmental protection. Section 112.7(a)(2) will provide such flexibility.

The EPA RA may require an owner or operator to amend his Plan if he finds that it does not meet the requirements of 40 CFR part 112 or that an amendment is necessary to prevent and contain discharges from the facility. The RA must notify the owner or operator of EPA's intent to require Plan amendment and specify the terms of such proposed amendment. Within 30 days of receipt of such notice, the owner or operator may submit written information, views, and arguments on the proposed amendment. After considering all relevant material presented, the RA must notify the owner or operator of any amendment required or rescind the notice. The owner or operator then has 30 days to amend, unless the RA, for good cause, specifies another effective date. The owner or operator must implement the amended Plan as soon as possible, but not later than six months after amendment, unless the RA specifies another date.

The owner or operator may appeal, within 30 days of receipt of the RA's decision, any decision of the RA requiring Plan amendment to the EPA Administrator. The EPA Administrator has 30 days from receipt of the notice of appeal to make a decision on that appeal. EPA will not impose penalties unless the owner or operator has failed to comply with a final decision requiring Plan amendment, but any failed appeal will not extend a compliance deadline.

Owners and operators should, of course, take all necessary steps to come into compliance with this part as soon as possible. In exercising its prosecutorial discretion, the Agency always takes into account the good faith and efforts to comply of an owner or operator who has been in noncompliance with applicable laws and regulations when deciding whether or not to take an enforcement action.

4. Question. Section 112.8(c)(8). The rule requires each installation to have an alarm device or to use gauges, with a person present to monitor. The use of gauges is in conflict with DOT regulations which do not allow a driver to be more than 25 feet away from the truck [49 CFR 177.834(i)]. How can Marketers cost-effectively comply with this requirement.

Answer. The intent of §112.8(c)(8) is to provide bulk storage containers with equipment to prevent overfills. The overfill prevention device must be engineered to

alert the person conducting the transfer of a pending overfill condition. However, an operator/driver could check a container's visual gauge prior to the commencement of the unloading process to confirm that the container's ullage is greater than the amount of oil that is to be transferred from the truck or railcar to the receiving container. Facility personnel who are able to communicate with the oil supplier (tank truck or railcar) could then gauge the container at frequent intervals. Thus, there is no conflict with 49 CFR 177.834(i)(3) in that the "25 foot rule" is a requirement that must be met during the unloading process, not prior to it. If the driver/operator is unable to view the gauge and/or container during the transfer process, additional personnel or equipment may be required. Additionally, under §112.8(c)(8), the owner or operator has a broad choice of the devices to use to avoid overfills/discharges. If none of the devices listed are practicable, the owner or operator may substitute another measure which provides equivalent environmental protection per §112.7(a)(2).

5. Question. Section 112.8(c)(6) requires integrity testing. Tests listed are very costly for small businesses. What other form of testing could be used and what is the approval process for an alternative test method? What is a "regular schedule" for testing? Does "visual inspection" mean internal or external inspection of the container? Further, §112.2 notes that only containers with a capacity of 55 gallons or more are counted. Does that mean that 55-gallon drums now must be tested? In many cases, 55-gallon drums handled by Marketers are owned by a lubricating oil manufacturer or a drum supplier. If testing is required, who is responsible for the testing of the drum?

Answer. The owner or operator may use any method of integrity testing that satisfies good engineering practice in lieu of one of the specific methods listed in the rule. The Professional Engineer (PE) certifying the SPCC plan may approve any integrity testing method that accords with good engineering practice.

Testing on a regular schedule means testing in accordance with the industry standards selected by the certifying engineer or at a frequency selected by the certifying engineer that will prevent discharges. Whatever schedule the PE selects must be documented in the Plan. In anticipation of this new requirement and the impact on smaller operators, EPA worked with the Steel Tank Institute (STI) to develop STI SP001-00, "Standard for Inspection of In-service Shop Fabricated Aboveground Tanks for Storage of Combustible and Flammable Liquids." This standard is targeted to smaller operators who utilize shop fabricated abovegound storage tanks. For more information on this standard see the STI website at www.steeltank.com and www.steeltank.com/library/pubs/sp001-01.htm.

The extent of visual inspection is normally prescribed by a specific industry standard which the PE selects to meet the integrity testing requirement. The rule requires visual testing in conjunction with another method of testing, because visual testing alone is normally insufficient to measure the integrity of a container. Visual

testing alone might not detect problems which could lead to container failure.

Fifty-five gallon drums serving as bulk storage containers are subject to the integrity testing requirement and always have been. The owner or operator of the facility has the responsibility to test such drums for integrity. For certain smaller shop-built containers (e.g., a 55 gallon drum) in which internal corrosion poses minimal risk of failure; which are inspected at least monthly; and, for which all sides are visible (i.e., the container has no contact with the ground), visual inspection alone might suffice in accordance with the deviation provision in §112.7(a)(2), subject to good engineering practice. In such case the owner or operator must explain in the Plan why visual integrity testing alone is sufficient, and provide equivalent environmental protection. However, containers which are in contact with the ground must be evaluated for integrity in accordance with industry standards and good engineering practice.

6. Question. It is common in cold states for Marketers to receive 100 or more 55-gallon drums of lubricating oil on a Monday, deliver to customers during the week, and end on Friday with less than 20 drums, which is less than the 1320-gallon threshold for an SPCC Plan. Will a SPCC Plan be required under the described circumstances?

Answer. Yes, a Plan is required under the circumstances described. The facility storage capacity is measured by the maximum amount of oil stored there at any time, in this case 5,500 gallons.

7. Question. Section 112.2. Dirt contractors often use small tank trucks with a capacity of greater than 1500 gallons for storage and distribution of diesel fuel. Does the usage of these trucks meet the definition of facility in this subsection?

Answer. Yes, such tank trucks are part of a facility because they are used to store oil.

8. Question. Section 112.7(a)(3)(vi). The requirement for clean-up contractor contact information applies for contractors under formal agreements; however, the rule preamble allows "less formal relationships" (agreements). Can an owner simply list contractors? Is there a timeframe within which the contractor must respond? Is a written agreement required? Does an agreement require a retainer?

Answer. Listing of a contractor with whom the owner or operator has an agreement for response is sufficient. The owner or operator should include information about a contractor that demonstrates the availability of the necessary personnel and equipment within appropriate response times. The owner or operator may want to include information about a specific contractor which demonstrates that the operator has researched the listed contractor's availability of the necessary personnel and equipment within appropriate response times. An agreement to respond may include a contract or some less formal relationship with a cleanup contractor. No formal written agreement

to respond is required by the SPCC rule, but if there is one, the owner or operator must discuss it in the Plan.

No response timeframe is specified in the rule. An appropriate response time is one consistent with good engineering practice and the Area Plan in which the facility operates.

A written agreement to respond is acceptable, but is not required.

Whether an agreement to respond requires a retainer is a matter for the contracting parties.

9. Question. Section 112.5. The SPCC Plan must be amended if design, construction or maintenance change enough to affect potential discharge. Must the SPCC Plan be amended if the contents of a container regularly change between gasoline and diesel fuel or between a lubricant base oil and a finished lubricant?

Answer. A change of product is a material change requiring Plan amendment if the change substantially alters the conditions of storage and the potential for discharge. An example of a change of product that would be a material change would be a change from storage of asphalt to storage of gasoline, due both to flammability and density concerns. Storage of gasoline instead of asphalt presents an increased fire and explosion hazard. A switch from storage of gasoline to storage of asphalt might result in increased stress on the container leading to its failure due to the differences in product density. Changes of product involving different grades of gasoline might not be a material change and thus not require amendment of the Plan if the differing grades of gasoline do not substantially change the conditions of storage and potential for discharge. Changes of product involving a flammable product (e.g., gasoline) as opposed to combustible liquids (e.g., diesel) are material changes that substantially alter the conditions of storage and the potential for discharge. The owner or operator must determine whether there will be a material change, and generally does so on a facility specific basis.

10. Question. Section 112.7(a)(3)(i). The type of oil in each container and its storage capacity must be noted in the SPCC Plan. Must the SPCC Plan be amended when product is changed in a tank from diesel to gasoline or vice versa as a result of seasonal demands? Must the SPCC Plan be amended when a container is changed between #1 and #2 oil, between dyed and undyed distillates, or between a lubricant and an ancillary product?

Answer. A change of product is a material change requiring Plan amendment if the change substantially alters the conditions of storage and the potential for discharge. An example of a change of product that would be a material change would be a change

from storage of asphalt to storage of gasoline. Storage of gasoline instead of asphalt presents an increased fire and explosion hazard. A switch from storage of gasoline to storage of asphalt might result in increased stress on the container leading to its failure. Changes of product involving different grades of gasoline might not be a material change and thus not require amendment of the Plan if the differing grades of gasoline do not substantially change the conditions of storage and potential for discharge. If the change of product is not a material change, it must be documented either in the Plan or in a log book or appendix which accompanies the SPCC plan.

11. Question. Section 112.7(h)(1). Secondary containment is required for the largest compartment of a truck. This is a problem in "frost-belt" states; especially for plants with limited space. In bulk plants with limited area and seasonal or weather-related restrictions, are there alternative compliance alternatives? What is the process of approval of alternatives?

Answer. See the answer to question #1. If no method of secondary containment is practicable because of engineering considerations, the owner or operator must provide a contingency plan following the requirements of 40 CFR part 109, and provide a written commitment of manpower, equipment, and materials required to expeditiously control and remove any quantity of oil discharged that may be harmful. The owner or operator must also conduct such other actions as are required by §112.7(d).

There is no alternative to containment other that those described above. The approval of the method of containment is a function of the engineer certifying the SPCC plan.

12. Question. Section 112.7(c). In the rule, containment areas must be capable of containing oil; in the preamble, they must be "sufficiently impervious to contain oil" and "it is assumed to construct secondary containment systems of impervious soil." Some inspectors allow cement; some require liners; some allow clay. Please clarify to prevent disparate regional enforcement.

Answer. Dikes, berms, or retaining walls must be sufficiently impervious to contain oil. The purpose of secondary containment is to contain oil from escaping the facility and reaching the environment. An owner or operator of a facility should have flexibility in how he prevents a discharge as described in §112.1(b), and any method of containment which achieves that end is sufficient.

Similarly, because the purpose of the "sufficiently impervious" standard is to prevent discharges as described in §112.1(b), dikes, berms, or retaining walls must be capable of containing oil and preventing such discharges. Discharges as described in §112.1(b) may result from direct discharges from containers, or from discharges from containers to groundwater that travel through the groundwater to navigable waters.

Effective containment means that the dike, berm, or retaining wall must be capable of containing oil and sufficiently impervious to prevent discharges from the containment system until it is cleaned up. The same holds true for containment floors or bottoms; they must be able to contain oil to prevent a discharge as described in §112.1(b). However, "effective containment" does not mean that liners are required for secondary containment areas. Liners are an option for meeting the secondary containment requirements, but are not required by the rule.

If you are the owner or operator of a facility subject to this part, you must prepare a Plan in accordance with good engineering practice. A complete description of how secondary containment is designed, implemented, and maintained to meet the standard of sufficiently impervious is necessary. In order to document that secondary containment is sufficiently impervious and sufficiently strong to contain oil until it is cleaned up, the Plan must describe how the secondary containment is designed to meet that standard. A written description of the sufficiently impervious standard is not only necessary for design and implementation, but will aid owners or operators of facilities in determining which practices will be necessary to maintain the standard of sufficiently impervious. Control and/or removal of vegetation may be necessary to maintain the impervious integrity of the secondary containment. Repairs of excavations or other penetrations through secondary containment will need to be conducted in accordance with good engineering practices in order to maintain the standard of sufficiently impervious. The owner or operator should monitor such imperviousness for effectiveness, in order to be sure that the method chosen remains impervious to contain oil.

13. Question. If most SPCC Plans must be amended and thus require a PE seal, there will be a high demand for PEs. Since a certain amount of scrutiny and time is associated with each seal, the cost to obtain a PE certification would likely escalate significantly if all must be completed by February 2003.

Answer. All SPCC Plans will require amendment. Some Plans will require amendment only to include the new PE attestations required by §112.3(d).

We doubt that PE costs will escalate because of the rule. Many small facilities will drop out of the SPCC universe. Also, we extended the time for Plan amendment and implementation in the rule from a proposed 60 days because we agreed with commenters that more time was necessary. The owner or operator of an existing facility now has up to six months to amend his Plan, and to up six more months to implement any amendment. Therefore, we believe that the extended time period is sufficient to secure necessary certifications at a reasonable cost.

14. Question. Can EPA provide guidance materials (guidance factsheets, compliance checklists, brochures, workshops, internet-based guidelines, etc.) to help Marketers

understand the requirements.

Answer. Yes, EPA will provide guidance materials. Some are already available on our website (www.epa.gov/oilspill); more are planned. We expect, in conjunction with Regional staff, to conduct extensive public education and outreach on the requirements of the revised rule, and how to comply with it.

15. Question. The rule is extremely long and difficult to read. Small businesses do not have the time nor resources to address them. Additionally, interpretations, both verbal and written, are conflicting. Given the number and type of clarifications needed, as well as the time involved in effecting changes once clarified, can the compliance deadline be extended to one year? If the deadline cannot be extended, can EPA issue guidance which states that inspections will not be conducted until after September of 2003 or later to prevent undue enforcement while resolving the issues, or in the event of third party lawsuits?

Answer. We wrote the rule in plain English to facilitate comprehension. The rule and preamble are long precisely because they answer many questions and provide many clarifications.

In response to public comments, we have already extended the compliance deadlines to one year for most facilities, as we noted above. We cannot commit to delaying inspections while compliance is ongoing. However, during any transitional grace period, owners and operators are still subject to enforcement for failure to have a required Plan, or for failure to prepare or implement a required Plan.

Again thank you for your memorandum. Please do not hesitate to contact me again if you have further questions. We are committed to working with small business to enhance rule compliance. Please contact Hugo Fleischman, Oil Program Center, Office of Emergency and Remedial Response, 703-603-8769, if you have any questions concerning this memorandum.

APPENDIX 20

SPCC REGULATIONS

SP001 STANDARD

engine on a public vessel) and any discharges of such oil accumulated in the bilges of a vessel discharged in compliance with MARPOL 73/78, Annex I, as provided in 33 CFR part 151, subpart A;

(b) Other discharges of oil permitted under MARPOL 73/78, Annex I, as provided in 33 CFR part 151, subpart A; and

(c) Any discharge of oil explicitly permitted by the Administrator in connection with research, demonstration projects, or studies relating to the prevention, control, or abatement of oil pollution.

[61 FR 7421, Feb. 28, 1996]

§ 110.6 Notice.

Any person in charge of a vessel or of an onshore or offshore facility shall, as soon as he or she has knowledge of any discharge of oil from such vessel or facility in violation of section 311(b)(3) of the Act, immediately notify the National Response Center (NRC) (800–424–8802; in the Washington, DC metropolitan area, 202–426–2675). If direct reporting to the NRC is not practicable, reports may be made to the Coast Guard or EPA predesignated On-Scene Coordinator (OSC) for the geographic area where the discharge occurs. All such reports shall be promptly relayed to the NRC. If it is not possible to notify the NRC or the predesignated OCS immediately, reports may be made immediately to the nearest Coast Guard unit, provided that the person in charge of the vessel or onshore or offshore facility notifies the NRC as soon as possible. The reports shall be made in accordance with such procedures as the Secretary of Transportation may prescribe. The procedures for such notice are set forth in U.S. Coast Guard regulations, 33 CFR part 153, subpart B and in the National Oil and Hazardous Substances Pollution Contingency Plan, 40 CFR part 300, subpart E.

(Approved by the Office of Management and Budget under control number 2050–0046)

[52 FR 10719, Apr. 2, 1987. Redesignated and amended at 61 FR 7421, Feb. 28, 1996; 61 FR 14032, Mar. 29, 1996]

PART 112—OIL POLLUTION PREVENTION

Sec.

Subpart A—Applicability, Definitions, and General Requirements For All Facilities and All Types of Oils

112.1 General applicability.
112.2 Definitions.
112.3 Requirement to prepare and implement a Spill Prevention, Control, and Countermeasure Plan.
112.4 Amendment of Spill Prevention, Control, and Countermeasure Plan by Regional Administrator.
112.5 Amendment of Spill Prevention, Control, and Countermeasure Plan by owners or operators.
112.6 [Reserved]
112.7 General requirements for Spill Prevention, Control, and Countermeasure Plans.

Subpart B—Requirements for Petroleum Oils and Non-Petroleum Oils, Except Animal Fats and Oils and Greases, and Fish and Marine Mammal Oils; and Vegetable Oils (Including Oils from Seeds, Nuts, Fruits, and Kernels)

112.8 Spill Prevention, Control, and Countermeasure Plan requirements for onshore facilities (excluding production facilities).
112.9 Spill Prevention, Control, and Countermeasure Plan requirements for onshore oil production facilities.
112.10 Spill Prevention, Control, and Countermeasure Plan requirements for onshore oil drilling and workover facilities.
112.11 Spill Prevention, Control, and Countermeasure Plan requirements for offshore oil drilling, production, or workover facilities.

Subpart C—Requirements for Animal Fats and Oils and Greases, and Fish and Marine Mammal Oils; and for Vegetable Oils, Including Oils from Seeds, Nuts, Fruits and Kernels

112.12 Spill Prevention, Control, and Countermeasure Plan requirements for onshore facilities (excluding production facilities).
112.13 Spill Prevention, Control, and Countermeasure Plan requirements for onshore oil production facilities.
112.14 Spill Prevention, Control, and Countermeasure Plan requirements for onshore oil drilling and workover facilities.

112.15 Spill Prevention, Control, and Countermeasure Plan requirements for offshore oil drilling, production, or workover facilities.

Subpart D—Response Requirements

112.20 Facility response plans.
112.21 Facility response training and drills/exercises.

APPENDIX A TO PART 112—MEMORANDUM OF UNDERSTANDING BETWEEN THE SECRETARY OF TRANSPORTATION AND THE ADMINISTRATOR OF THE ENVIRONMENTAL PROTECTION AGENCY

APPENDIX B TO PART 112—MEMORANDUM OF UNDERSTANDING AMONG THE SECRETARY OF THE INTERIOR, SECRETARY OF TRANSPORTATION, AND ADMINISTRATOR OF THE ENVIRONMENTAL PROTECTION AGENCY

APPENDIX C TO PART 112—SUBSTANTIAL HARM CRITERIA

APPENDIX D TO PART 112—DETERMINATION OF A WORST CASE DISCHARGE PLANNING VOLUME

APPENDIX E TO PART 112—DETERMINATION AND EVALUATION OF REQUIRED RESPONSE RESOURCES FOR FACILITY RESPONSE PLANS

APPENDIX F TO PART 112—FACILITY-SPECIFIC RESPONSE PLAN

AUTHORITY: 33 U.S.C. 1251 *et seq.*; 33 U.S.C. 2720; E.O. 12777 (October 18, 1991), 3 CFR, 1991 Comp., p. 351.

SOURCE: 38 FR 34165, Dec. 11, 1973, unless otherwise noted.

EDITORIAL NOTE: Nomenclature changes to part 112 appear at 65 FR 40798, June 30, 2000.

Subpart A—Applicability, Definitions, and General Requirements for All Facilities and All Types of Oils

SOURCE: 67 FR 47140, July 17, 2002, unless otherwise noted.

§ 112.1 General applicability.

(a)(1) This part establishes procedures, methods, equipment, and other requirements to prevent the discharge of oil from non-transportation-related onshore and offshore facilities into or upon the navigable waters of the United States or adjoining shorelines, or into or upon the waters of the contiguous zone, or in connection with activities under the Outer Continental Shelf Lands Act or the Deepwater Port Act of 1974, or that may affect natural resources belonging to, appertaining to, or under the exclusive management authority of the United States (including resources under the Magnuson Fishery Conservation and Management Act).

(2) As used in this part, words in the singular also include the plural and words in the masculine gender also include the feminine and vice versa, as the case may require.

(b) Except as provided in paragraph (d) of this section, this part applies to any owner or operator of a non-transportation-related onshore or offshore facility engaged in drilling, producing, gathering, storing, processing, refining, transferring, distributing, using, or consuming oil and oil products, which due to its location, could reasonably be expected to discharge oil in quantities that may be harmful, as described in part 110 of this chapter, into or upon the navigable waters of the United States or adjoining shorelines, or into or upon the waters of the contiguous zone, or in connection with activities under the Outer Continental Shelf Lands Act or the Deepwater Port Act of 1974, or that may affect natural resources belonging to, appertaining to, or under the exclusive management authority of the United States (including resources under the Magnuson Fishery Conservation and Management Act) that has oil in:

(1) Any aboveground container;

(2) Any completely buried tank as defined in § 112.2;

(3) Any container that is used for standby storage, for seasonal storage, or for temporary storage, or not otherwise ''permanently closed'' as defined in § 112.2;

(4) Any ''bunkered tank'' or ''partially buried tank'' as defined in § 112.2, or any container in a vault, each of which is considered an aboveground storage container for purposes of this part.

(c) As provided in section 313 of the Clean Water Act (CWA), departments, agencies, and instrumentalities of the Federal government are subject to this part to the same extent as any person.

(d) Except as provided in paragraph (f) of this section, this part does not apply to:

(1) The owner or operator of any facility, equipment, or operation that is

not subject to the jurisdiction of the Environmental Protection Agency (EPA) under section 311(j)(1)(C) of the CWA, as follows:

(i) Any onshore or offshore facility, that due to its location, could not reasonably be expected to have a discharge as described in paragraph (b) of this section. This determination must be based solely upon consideration of the geographical and location aspects of the facility (such as proximity to navigable waters or adjoining shorelines, land contour, drainage, etc.) and must exclude consideration of man-made features such as dikes, equipment or other structures, which may serve to restrain, hinder, contain, or otherwise prevent a discharge as described in paragraph (b) of this section.

(ii) Any equipment, or operation of a vessel or transportation-related onshore or offshore facility which is subject to the authority and control of the U.S. Department of Transportation, as defined in the Memorandum of Understanding between the Secretary of Transportation and the Administrator of EPA, dated November 24, 1971 (Appendix A of this part).

(iii) Any equipment, or operation of a vessel or onshore or offshore facility which is subject to the authority and control of the U.S. Department of Transportation or the U.S. Department of the Interior, as defined in the Memorandum of Understanding between the Secretary of Transportation, the Secretary of the Interior, and the Administrator of EPA, dated November 8, 1993 (Appendix B of this part).

(2) Any facility which, although otherwise subject to the jurisdiction of EPA, meets both of the following requirements:

(i) The completely buried storage capacity of the facility is 42,000 gallons or less of oil. For purposes of this exemption, the completely buried storage capacity of a facility excludes the capacity of a completely buried tank, as defined in §112.2, and connected underground piping, underground ancillary equipment, and containment systems, that is currently subject to all of the technical requirements of part 280 of this chapter or all of the technical requirements of a State program approved under part 281 of this chapter. The completely buried storage capacity of a facility also excludes the capacity of a container that is ''permanently closed,'' as defined in §112.2.

(ii) The aggregate aboveground storage capacity of the facility is 1,320 gallons or less of oil. For purposes of this exemption, only containers of oil with a capacity of 55 gallons or greater are counted. The aggregate aboveground storage capacity of a facility excludes the capacity of a container that is ''permanently closed,'' as defined in §112.2.

(3) Any offshore oil drilling, production, or workover facility that is subject to the notices and regulations of the Minerals Management Service, as specified in the Memorandum of Understanding between the Secretary of Transportation, the Secretary of the Interior, and the Administrator of EPA, dated November 8, 1993 (Appendix B of this part).

(4) Any completely buried storage tank, as defined in §112.2, and connected underground piping, underground ancillary equipment, and containment systems, at any facility, that is subject to all of the technical requirements of part 280 of this chapter or a State program approved under part 281 of this chapter, except that such a tank must be marked on the facility diagram as provided in §112.7(a)(3), if the facility is otherwise subject to this part.

(5) Any container with a storage capacity of less than 55 gallons of oil.

(6) Any facility or part thereof used exclusively for wastewater treatment and not used to satisfy any requirement of this part. The production, recovery, or recycling of oil is not wastewater treatment for purposes of this paragraph.

(e) This part establishes requirements for the preparation and implementation of Spill Prevention, Control, and Countermeasure (SPCC) Plans. SPCC Plans are designed to complement existing laws, regulations, rules, standards, policies, and procedures pertaining to safety standards, fire prevention, and pollution prevention rules. The purpose of an SPCC Plan is to form a comprehensive Federal/State spill prevention program

that minimizes the potential for discharges. The SPCC Plan must address all relevant spill prevention, control, and countermeasures necessary at the specific facility. Compliance with this part does not in any way relieve the owner or operator of an onshore or an offshore facility from compliance with other Federal, State, or local laws.

(f) Notwithstanding paragraph (d) of this section, the Regional Administrator may require that the owner or operator of any facility subject to the jurisdiction of EPA under section 311(j) of the CWA prepare and implement an SPCC Plan, or any applicable part, to carry out the purposes of the CWA.

(1) Following a preliminary determination, the Regional Administrator must provide a written notice to the owner or operator stating the reasons why he must prepare an SPCC Plan, or applicable part. The Regional Administrator must send such notice to the owner or operator by certified mail or by personal delivery. If the owner or operator is a corporation, the Regional Administrator must also mail a copy of such notice to the registered agent, if any and if known, of the corporation in the State where the facility is located.

(2) Within 30 days of receipt of such written notice, the owner or operator may provide information and data and may consult with the Agency about the need to prepare an SPCC Plan, or applicable part.

(3) Within 30 days following the time under paragraph (b)(2) of this section within which the owner or operator may provide information and data and consult with the Agency about the need to prepare an SPCC Plan, or applicable part, the Regional Administrator must make a final determination regarding whether the owner or operator is required to prepare and implement an SPCC Plan, or applicable part. The Regional Administrator must send the final determination to the owner or operator by certified mail or by personal delivery. If the owner or operator is a corporation, the Regional Administrator must also mail a copy of the final determination to the registered agent, if any and if known, of the corporation in the State where the facility is located.

(4) If the Regional Administrator makes a final determination that an SPCC Plan, or applicable part, is necessary, the owner or operator must prepare the Plan, or applicable part, within six months of that final determination and implement the Plan, or applicable part, as soon as possible, but not later than one year after the Regional Administrator has made a final determination.

(5) The owner or operator may appeal a final determination made by the Regional Administrator requiring preparation and implementation of an SPCC Plan, or applicable part, under this paragraph. The owner or operator must make the appeal to the Administrator of EPA within 30 days of receipt of the final determination under paragraph (b)(3) of this section from the Regional Administrator requiring preparation and/or implementation of an SPCC Plan, or applicable part. The owner or operator must send a complete copy of the appeal to the Regional Administrator at the time he makes the appeal to the Administrator. The appeal must contain a clear and concise statement of the issues and points of fact in the case. In the appeal, the owner or operator may also provide additional information. The additional information may be from any person. The Administrator may request additional information from the owner or operator. The Administrator must render a decision within 60 days of receiving the appeal or additional information submitted by the owner or operator and must serve the owner or operator with the decision made in the appeal in the manner described in paragraph (f)(1) of this section.

§ 112.2 Definitions.

For the purposes of this part:

Adverse weather means weather conditions that make it difficult for response equipment and personnel to clean up or remove spilled oil, and that must be considered when identifying response systems and equipment in a response plan for the applicable operating environment. Factors to consider include significant wave height as specified in Appendix E to this part (as appropriate), ice conditions, temperatures, weather-related visibility, and

currents within the area in which the systems or equipment is intended to function.

Alteration means any work on a container involving cutting, burning, welding, or heating operations that changes the physical dimensions or configuration of the container.

Animal fat means a non-petroleum oil, fat, or grease of animal, fish, or marine mammal origin.

Breakout tank means a container used to relieve surges in an oil pipeline system or to receive and store oil transported by a pipeline for reinjection and continued transportation by pipeline.

Bulk storage container means any container used to store oil. These containers are used for purposes including, but not limited to, the storage of oil prior to use, while being used, or prior to further distribution in commerce. Oil-filled electrical, operating, or manufacturing equipment is not a bulk storage container.

Bunkered tank means a container constructed or placed in the ground by cutting the earth and re-covering the container in a manner that breaks the surrounding natural grade, or that lies above grade, and is covered with earth, sand, gravel, asphalt, or other material. A bunkered tank is considered an aboveground storage container for purposes of this part.

Completely buried tank means any container completely below grade and covered with earth, sand, gravel, asphalt, or other material. Containers in vaults, bunkered tanks, or partially buried tanks are considered aboveground storage containers for purposes of this part.

Complex means a facility possessing a combination of transportation-related and non-transportation-related components that is subject to the jurisdiction of more than one Federal agency under section 311(j) of the CWA.

Contiguous zone means the zone established by the United States under Article 24 of the Convention of the Territorial Sea and Contiguous Zone, that is contiguous to the territorial sea and that extends nine miles seaward from the outer limit of the territorial area.

Contract or other approved means means:

(1) A written contractual agreement with an oil spill removal organization that identifies and ensures the availability of the necessary personnel and equipment within appropriate response times; and/or

(2) A written certification by the owner or operator that the necessary personnel and equipment resources, owned or operated by the facility owner or operator, are available to respond to a discharge within appropriate response times; and/or

(3) Active membership in a local or regional oil spill removal organization that has identified and ensures adequate access through such membership to necessary personnel and equipment to respond to a discharge within appropriate response times in the specified geographic area; and/or

(4) Any other specific arrangement approved by the Regional Administrator upon request of the owner or operator.

Discharge includes, but is not limited to, any spilling, leaking, pumping, pouring, emitting, emptying, or dumping of oil, but excludes discharges in compliance with a permit under section 402 of the CWA; discharges resulting from circumstances identified, reviewed, and made a part of the public record with respect to a permit issued or modified under section 402 of the CWA, and subject to a condition in such permit; or continuous or anticipated intermittent discharges from a point source, identified in a permit or permit application under section 402 of the CWA, that are caused by events occurring within the scope of relevant operating or treatment systems. For purposes of this part, the term discharge shall not include any discharge of oil that is authorized by a permit issued under section 13 of the River and Harbor Act of 1899 (33 U.S.C. 407).

Facility means any mobile or fixed, onshore or offshore building, structure, installation, equipment, pipe, or pipeline (other than a vessel or a public vessel) used in oil well drilling operations, oil production, oil refining, oil storage, oil gathering, oil processing, oil transfer, oil distribution, and waste treatment, or in which oil is used, as described in Appendix A to this part. The boundaries of a facility depend on

several site-specific factors, including, but not limited to, the ownership or operation of buildings, structures, and equipment on the same site and the types of activity at the site.

Fish and wildlife and sensitive environments means areas that may be identified by their legal designation or by evaluations of Area Committees (for planning) or members of the Federal On-Scene Coordinator's spill response structure (during responses). These areas may include wetlands, National and State parks, critical habitats for endangered or threatened species, wilderness and natural resource areas, marine sanctuaries and estuarine reserves, conservation areas, preserves, wildlife areas, wildlife refuges, wild and scenic rivers, recreational areas, national forests, Federal and State lands that are research national areas, heritage program areas, land trust areas, and historical and archaeological sites and parks. These areas may also include unique habitats such as aquaculture sites and agricultural surface water intakes, bird nesting areas, critical biological resource areas, designated migratory routes, and designated seasonal habitats.

Injury means a measurable adverse change, either long- or short-term, in the chemical or physical quality or the viability of a natural resource resulting either directly or indirectly from exposure to a discharge, or exposure to a product of reactions resulting from a discharge.

Maximum extent practicable means within the limitations used to determine oil spill planning resources and response times for on-water recovery, shoreline protection, and cleanup for worst case discharges from onshore non-transportation-related facilities in adverse weather. It includes the planned capability to respond to a worst case discharge in adverse weather, as contained in a response plan that meets the requirements in §112.20 or in a specific plan approved by the Regional Administrator.

Navigable waters means the waters of the United States, including the territorial seas.

(1) The term includes:

(i) All waters that are currently used, were used in the past, or may be susceptible to use in interstate or foreign commerce, including all waters subject to the ebb and flow of the tide;

(ii) All interstate waters, including interstate wetlands;

(iii) All other waters such as intrastate lakes, rivers, streams (including intermittent streams), mudflats, sandflats, wetlands, sloughs, prairie potholes, wet meadows, playa lakes, or natural ponds, the use, degradation, or destruction of which could affect interstate or foreign commerce including any such waters:

(A) That are or could be used by interstate or foreign travelers for recreational or other purposes; or

(B) From which fish or shellfish are or could be taken and sold in interstate or foreign commerce; or,

(C) That are or could be used for industrial purposes by industries in interstate commerce;

(iv) All impoundments of waters otherwise defined as waters of the United States under this section;

(v) Tributaries of waters identified in paragraphs (1)(i) through (iv) of this definition;

(vi) The territorial sea; and

(vii) Wetlands adjacent to waters (other than waters that are themselves wetlands) identified in paragraph (1) of this definition.

(2) Waste treatment systems, including treatment ponds or lagoons designed to meet the requirements of the CWA (other than cooling ponds which also meet the criteria of this definition) are not waters of the United States. Navigable waters do not include prior converted cropland. Notwithstanding the determination of an area's status as prior converted cropland by any other Federal agency, for the purposes of the CWA, the final authority regarding CWA jurisdiction remains with EPA.

Non-petroleum oil means oil of any kind that is not petroleum-based, including but not limited to: Fats, oils, and greases of animal, fish, or marine mammal origin; and vegetable oils, including oils from seeds, nuts, fruits, and kernels.

Offshore facility means any facility of any kind (other than a vessel or public vessel) located in, on, or under any of the navigable waters of the United

States, and any facility of any kind that is subject to the jurisdiction of the United States and is located in, on, or under any other waters.

Oil means oil of any kind or in any form, including, but not limited to: fats, oils, or greases of animal, fish, or marine mammal origin; vegetable oils, including oils from seeds, nuts, fruits, or kernels; and, other oils and greases, including petroleum, fuel oil, sludge, synthetic oils, mineral oils, oil refuse, or oil mixed with wastes other than dredged spoil.

Oil Spill Removal Organization means an entity that provides oil spill response resources, and includes any for-profit or not-for-profit contractor, cooperative, or in-house response resources that have been established in a geographic area to provide required response resources.

Onshore facility means any facility of any kind located in, on, or under any land within the United States, other than submerged lands.

Owner or operator means any person owning or operating an onshore facility or an offshore facility, and in the case of any abandoned offshore facility, the person who owned or operated or maintained the facility immediately prior to such abandonment.

Partially buried tank means a storage container that is partially inserted or constructed in the ground, but not entirely below grade, and not completely covered with earth, sand, gravel, asphalt, or other material. A partially buried tank is considered an aboveground storage container for purposes of this part.

Permanently closed means any container or facility for which:

(1) All liquid and sludge has been removed from each container and connecting line; and

(2) All connecting lines and piping have been disconnected from the container and blanked off, all valves (except for ventilation valves) have been closed and locked, and conspicuous signs have been posted on each container stating that it is a permanently closed container and noting the date of closure.

Person includes an individual, firm, corporation, association, or partnership.

Petroleum oil means petroleum in any form, including but not limited to crude oil, fuel oil, mineral oil, sludge, oil refuse, and refined products.

Production facility means all structures (including but not limited to wells, platforms, or storage facilities), piping (including but not limited to flowlines or gathering lines), or equipment (including but not limited to workover equipment, separation equipment, or auxiliary non-transportation-related equipment) used in the production, extraction, recovery, lifting, stabilization, separation or treating of oil, or associated storage or measurement, and located in a single geographical oil or gas field operated by a single operator.

Regional Administrator means the Regional Administrator of the Environmental Protection Agency, in and for the Region in which the facility is located.

Repair means any work necessary to maintain or restore a container to a condition suitable for safe operation, other than that necessary for ordinary, day-to-day maintenance to maintain the functional integrity of the container and that does not weaken the container.

Spill Prevention, Control, and Countermeasure Plan; SPCC Plan, or Plan means the document required by § 112.3 that details the equipment, workforce, procedures, and steps to prevent, control, and provide adequate countermeasures to a discharge.

Storage capacity of a container means the shell capacity of the container.

Transportation-related and non-transportation-related, as applied to an onshore or offshore facility, are defined in the Memorandum of Understanding between the Secretary of Transportation and the Administrator of the Environmental Protection Agency, dated November 24, 1971, (Appendix A of this part).

United States means the States, the District of Columbia, the Commonwealth of Puerto Rico, the Commonwealth of the Northern Mariana Islands, Guam, American Samoa, the U.S. Virgin Islands, and the Pacific Island Governments.

Vegetable oil means a non-petroleum oil or fat of vegetable origin, including

but not limited to oils and fats derived from plant seeds, nuts, fruits, and kernels.

Vessel means every description of watercraft or other artificial contrivance used, or capable of being used, as a means of transportation on water, other than a public vessel.

Wetlands means those areas that are inundated or saturated by surface or groundwater at a frequency or duration sufficient to support, and that under normal circumstances do support, a prevalence of vegetation typically adapted for life in saturated soil conditions. Wetlands generally include playa lakes, swamps, marshes, bogs, and similar areas such as sloughs, prairie potholes, wet meadows, prairie river overflows, mudflats, and natural ponds.

Worst case discharge for an onshore non-transportation-related facility means the largest foreseeable discharge in adverse weather conditions as determined using the worksheets in Appendix D to this part.

§ 112.3 Requirement to prepare and implement a Spill Prevention, Control, and Countermeasure Plan.

The owner or operator of an onshore or offshore facility subject to this section must prepare a Spill Prevention, Control, and Countermeasure Plan (hereafter ''SPCC Plan'' or ''Plan),'' in writing, and in accordance with § 112.7, and any other applicable section of this part.

(a) If your onshore or offshore facility was in operation on or before August 16, 2002, you must maintain your Plan, but must amend it, if necessary to ensure compliance with this part, on or before February 17, 2006, and must implement the amended Plan as soon as possible, but not later than August 18, 2006. If your onshore or offshore facility becomes operational after August 16, 2002, through August 18, 2006, and could reasonably be expected to have a discharge as described in § 112.1(b), you must prepare a Plan on or before August 18, 2006, and fully implement it as soon as possible, but not later than August 18, 2006.

(b) If you are the owner or operator of an onshore or offshore facility that becomes operational after August 18, 2006, and could reasonably be expected to have a discharge as described in § 112.1(b), you must prepare and implement a Plan before you begin operations.

(c) If you are the owner or operator of an onshore or offshore mobile facility, such as an onshore drilling or workover rig, barge mounted offshore drilling or workover rig, or portable fueling facility, you must prepare, implement, and maintain a facility Plan as required by this section. You must maintain your Plan, but must amend and implement it, if necessary to ensure compliance with this part, on or before August 18, 2006. If your onshore or offshore mobile facility becomes operational after August 18, 2006, and could reasonably be expected to have a discharge as described in § 112.1(b), you must prepare and implement a Plan before you begin operations. This provision does not require that you prepare a new Plan each time you move the facility to a new site. The Plan may be a general Plan. When you move the mobile or portable facility, you must locate and install it using the discharge prevention practices outlined in the Plan for the facility. The Plan is applicable only while the facility is in a fixed (non-transportation) operating mode.

(d) A licensed Professional Engineer must review and certify a Plan for it to be effective to satisfy the requirements of this part.

(1) By means of this certification the Professional Engineer attests:

(i) That he is familiar with the requirements of this part ;

(ii) That he or his agent has visited and examined the facility;

(iii) That the Plan has been prepared in accordance with good engineering practice, including consideration of applicable industry standards, and with the requirements of this part;

(iv) That procedures for required inspections and testing have been established; and

(v) That the Plan is adequate for the facility.

(2) Such certification shall in no way relieve the owner or operator of a facility of his duty to prepare and fully implement such Plan in accordance with the requirements of this part.

(e) If you are the owner or operator of a facility for which a Plan is required under this section, you must:

(1) Maintain a complete copy of the Plan at the facility if the facility is normally attended at least four hours per day, or at the nearest field office if the facility is not so attended, and

(2) Have the Plan available to the Regional Administrator for on-site review during normal working hours.

(f) *Extension of time.* (1) The Regional Administrator may authorize an extension of time for the preparation and full implementation of a Plan, or any amendment thereto, beyond the time permitted for the preparation, implementation, or amendment of a Plan under this part, when he finds that the owner or operator of a facility subject to this section, cannot fully comply with the requirements as a result of either nonavailability of qualified personnel, or delays in construction or equipment delivery beyond the control and without the fault of such owner or operator or his agents or employees.

(2) If you are an owner or operator seeking an extension of time under paragraph (f)(1) of this section, you may submit a written extension request to the Regional Administrator. Your request must include:

(i) A full explanation of the cause for any such delay and the specific aspects of the Plan affected by the delay;

(ii) A full discussion of actions being taken or contemplated to minimize or mitigate such delay; and

(iii) A proposed time schedule for the implementation of any corrective actions being taken or contemplated, including interim dates for completion of tests or studies, installation and operation of any necessary equipment, or other preventive measures. In addition you may present additional oral or written statements in support of your extension request.

(3) The submission of a written extension request under paragraph (f)(2) of this section does not relieve you of your obligation to comply with the requirements of this part. The Regional Administrator may request a copy of your Plan to evaluate the extension request. When the Regional Administrator authorizes an extension of time for particular equipment or other specific aspects of the Plan, such extension does not affect your obligation to comply with the requirements related to other equipment or other specific aspects of the Plan for which the Regional Administrator has not expressly authorized an extension.

[67 FR 47140, July 17, 2002, as amended at 68 FR 1351, Jan. 9, 2003; 68 FR 18894, Apr. 17, 2003; 69 FR 48798, Aug. 11, 2004]

§ 112.4 Amendment of Spill Prevention, Control, and Countermeasure Plan by Regional Administrator.

If you are the owner or operator of a facility subject to this part, you must:

(a) Notwithstanding compliance with § 112.3, whenever your facility has discharged more than 1,000 U.S. gallons of oil in a single discharge as described in § 112.1(b), or discharged more than 42 U.S. gallons of oil in each of two discharges as described in § 112.1(b), occurring within any twelve month period, submit the following information to the Regional Administrator within 60 days from the time the facility becomes subject to this section:

(1) Name of the facility;

(2) Your name;

(3) Location of the facility;

(4) Maximum storage or handling capacity of the facility and normal daily throughput;

(5) Corrective action and countermeasures you have taken, including a description of equipment repairs and replacements;

(6) An adequate description of the facility, including maps, flow diagrams, and topographical maps, as necessary;

(7) The cause of such discharge as described in § 112.1(b), including a failure analysis of the system or subsystem in which the failure occurred;

(8) Additional preventive measures you have taken or contemplated to minimize the possibility of recurrence; and

(9) Such other information as the Regional Administrator may reasonably require pertinent to the Plan or discharge.

(b) Take no action under this section until it applies to your facility. This section does not apply until the expiration of the time permitted for the initial preparation and implementation of

the Plan under § 112.3, but not including any amendments to the Plan.

(c) Send to the appropriate agency or agencies in charge of oil pollution control activities in the State in which the facility is located a complete copy of all information you provided to the Regional Administrator under paragraph (a) of this section. Upon receipt of the information such State agency or agencies may conduct a review and make recommendations to the Regional Administrator as to further procedures, methods, equipment, and other requirements necessary to prevent and to contain discharges from your facility.

(d) Amend your Plan, if after review by the Regional Administrator of the information you submit under paragraph (a) of this section, or submission of information to EPA by the State agency under paragraph (c) of this section, or after on-site review of your Plan, the Regional Administrator requires that you do so. The Regional Administrator may require you to amend your Plan if he finds that it does not meet the requirements of this part or that amendment is necessary to prevent and contain discharges from your facility.

(e) Act in accordance with this paragraph when the Regional Administrator proposes by certified mail or by personal delivery that you amend your SPCC Plan. If the owner or operator is a corporation, he must also notify by mail the registered agent of such corporation, if any and if known, in the State in which the facility is located. The Regional Administrator must specify the terms of such proposed amendment. Within 30 days from receipt of such notice, you may submit written information, views, and arguments on the proposed amendment. After considering all relevant material presented, the Regional Administrator must either notify you of any amendment required or rescind the notice. You must amend your Plan as required within 30 days after such notice, unless the Regional Administrator, for good cause, specifies another effective date. You must implement the amended Plan as soon as possible, but not later than six months after you amend your Plan, unless the Regional Administrator specifies another date.

(f) If you appeal a decision made by the Regional Administrator requiring an amendment to an SPCC Plan, send the appeal to the EPA Administrator in writing within 30 days of receipt of the notice from the Regional Administrator requiring the amendment under paragraph (e) of this section. You must send a complete copy of the appeal to the Regional Administrator at the time you make the appeal. The appeal must contain a clear and concise statement of the issues and points of fact in the case. It may also contain additional information from you, or from any other person. The EPA Administrator may request additional information from you, or from any other person. The EPA Administrator must render a decision within 60 days of receiving the appeal and must notify you of his decision.

§ 112.5 Amendment of Spill Prevention, Control, and Countermeasure Plan by owners or operators.

If you are the owner or operator of a facility subject to this part, you must:

(a) Amend the SPCC Plan for your facility in accordance with the general requirements in § 112.7, and with any specific section of this part applicable to your facility, when there is a change in the facility design, construction, operation, or maintenance that materially affects its potential for a discharge as described in § 112.1(b). Examples of changes that may require amendment of the Plan include, but are not limited to: commissioning or decommissioning containers; replacement, reconstruction, or movement of containers; reconstruction, replacement, or installation of piping systems; construction or demolition that might alter secondary containment structures; changes of product or service; or revision of standard operation or maintenance procedures at a facility. An amendment made under this section must be prepared within six months, and implemented as soon as possible, but not later than six months following preparation of the amendment.

(b) Notwithstanding compliance with paragraph (a) of this section, complete a review and evaluation of the SPCC Plan at least once every five years from the date your facility becomes

subject to this part; or, if your facility was in operation on or before August 16, 2002, five years from the date your last review was required under this part. As a result of this review and evaluation, you must amend your SPCC Plan within six months of the review to include more effective prevention and control technology if the technology has been field-proven at the time of the review and will significantly reduce the likelihood of a discharge as described in § 112.1(b) from the facility. You must implement any amendment as soon as possible, but not later than six months following preparation of any amendment. You must document your completion of the review and evaluation, and must sign a statement as to whether you will amend the Plan, either at the beginning or end of the Plan or in a log or an appendix to the Plan. The following words will suffice, ''I have completed review and evaluation of the SPCC Plan for (name of facility) on (date), and will (will not) amend the Plan as a result.''

(c) Have a Professional Engineer certify any technical amendment to your Plan in accordance with § 112.3(d).

§ 112.6 [Reserved]

§ 112.7 General requirements for Spill Prevention, Control, and Countermeasure Plans.

If you are the owner or operator of a facility subject to this part you must prepare a Plan in accordance with good engineering practices. The Plan must have the full approval of management at a level of authority to commit the necessary resources to fully implement the Plan. You must prepare the Plan in writing. If you do not follow the sequence specified in this section for the Plan, you must prepare an equivalent Plan acceptable to the Regional Administrator that meets all of the applicable requirements listed in this part, and you must supplement it with a section cross-referencing the location of requirements listed in this part and the equivalent requirements in the other prevention plan. If the Plan calls for additional facilities or procedures, methods, or equipment not yet fully operational, you must discuss these items in separate paragraphs, and must explain separately the details of installation and operational start-up. As detailed elsewhere in this section, you must also:

(a)(1) Include a discussion of your facility's conformance with the requirements listed in this part.

(2) Comply with all applicable requirements listed in this part. Your Plan may deviate from the requirements in paragraphs (g), (h)(2) and (3), and (i) of this section and the requirements in subparts B and C of this part, except the secondary containment requirements in paragraphs (c) and (h)(1) of this section, and §§ 112.8(c)(2), 112.8(c)(11), 112.9(c)(2), 112.10(c), 112.12(c)(2), 112.12(c)(11), 112.13(c)(2), and 112.14(c), where applicable to a specific facility, if you provide equivalent environmental protection by some other means of spill prevention, control, or countermeasure. Where your Plan does not conform to the applicable requirements in paragraphs (g), (h)(2) and (3), and (i) of this section, or the requirements of subparts B and C of this part, except the secondary containment requirements in paragraphs (c) and (h)(1) of this section, and §§ 112.8(c)(2), 112.8(c)(11), 112.9(c)(2), 112.10(c), 112.12(c)(2), 112.12(c)(11), 112.13(c)(2), and 112.14(c), you must state the reasons for nonconformance in your Plan and describe in detail alternate methods and how you will achieve equivalent environmental protection. If the Regional Administrator determines that the measures described in your Plan do not provide equivalent environmental protection, he may require that you amend your Plan, following the procedures in § 112.4(d) and (e).

(3) Describe in your Plan the physical layout of the facility and include a facility diagram, which must mark the location and contents of each container. The facility diagram must include completely buried tanks that are otherwise exempted from the requirements of this part under § 112.1(d)(4). The facility diagram must also include all transfer stations and connecting pipes. You must also address in your Plan:

(i) The type of oil in each container and its storage capacity;

(ii) Discharge prevention measures including procedures for routine handling of products (loading, unloading, and facility transfers, *etc.*);

(iii) Discharge or drainage controls such as secondary containment around containers and other structures, equipment, and procedures for the control of a discharge;

(iv) Countermeasures for discharge discovery, response, and cleanup (both the facility's capability and those that might be required of a contractor);

(v) Methods of disposal of recovered materials in accordance with applicable legal requirements; and

(vi) Contact list and phone numbers for the facility response coordinator, National Response Center, cleanup contractors with whom you have an agreement for response, and all appropriate Federal, State, and local agencies who must be contacted in case of a discharge as described in §112.1(b).

(4) Unless you have submitted a response plan under §112.20, provide information and procedures in your Plan to enable a person reporting a discharge as described in §112.1(b) to relate information on the exact address or location and phone number of the facility; the date and time of the discharge, the type of material discharged; estimates of the total quantity discharged; estimates of the quantity discharged as described in §112.1(b); the source of the discharge; a description of all affected media; the cause of the discharge; any damages or injuries caused by the discharge; actions being used to stop, remove, and mitigate the effects of the discharge; whether an evacuation may be needed; and, the names of individuals and/or organizations who have also been contacted.

(5) Unless you have submitted a response plan under §112.20, organize portions of the Plan describing procedures you will use when a discharge occurs in a way that will make them readily usable in an emergency, and include appropriate supporting material as appendices.

(b) Where experience indicates a reasonable potential for equipment failure (such as loading or unloading equipment, tank overflow, rupture, or leakage, or any other equipment known to be a source of a discharge), include in your Plan a prediction of the direction, rate of flow, and total quantity of oil which could be discharged from the facility as a result of each type of major equipment failure.

(c) Provide appropriate containment and/or diversionary structures or equipment to prevent a discharge as described in §112.1(b). The entire containment system, including walls and floor, must be capable of containing oil and must be constructed so that any discharge from a primary containment system, such as a tank or pipe, will not escape the containment system before cleanup occurs. At a minimum, you must use one of the following prevention systems or its equivalent:

(1) For onshore facilities:

(i) Dikes, berms, or retaining walls sufficiently impervious to contain oil;

(ii) Curbing;

(iii) Culverting, gutters, or other drainage systems;

(iv) Weirs, booms, or other barriers;

(v) Spill diversion ponds;

(vi) Retention ponds; or

(vii) Sorbent materials.

(2) For offshore facilities:

(i) Curbing or drip pans; or

(ii) Sumps and collection systems.

(d) If you determine that the installation of any of the structures or pieces of equipment listed in paragraphs (c) and (h)(1) of this section, and §§112.8(c)(2), 112.8(c)(11), 112.9(c)(2), 112.10(c), 112.12(c)(2), 112.12(c)(11), 112.13(c)(2), and 112.14(c) to prevent a discharge as described in §112.1(b) from any onshore or offshore facility is not practicable, you must clearly explain in your Plan why such measures are not practicable; for bulk storage containers, conduct both periodic integrity testing of the containers and periodic integrity and leak testing of the valves and piping; and, unless you have submitted a response plan under §112.20, provide in your Plan the following:

(1) An oil spill contingency plan following the provisions of part 109 of this chapter.

(2) A written commitment of manpower, equipment, and materials required to expeditiously control and remove any quantity of oil discharged that may be harmful.

(e) *Inspections, tests, and records.* Conduct inspections and tests required by this part in accordance with written procedures that you or the certifying engineer develop for the facility. You must keep these written procedures and a record of the inspections and tests, signed by the appropriate supervisor or inspector, with the SPCC Plan for a period of three years. Records of inspections and tests kept under usual and customary business practices will suffice for purposes of this paragraph.

(f) *Personnel, training, and discharge prevention procedures.* (1) At a minimum, train your oil-handling personnel in the operation and maintenance of equipment to prevent discharges; discharge procedure protocols; applicable pollution control laws, rules, and regulations; general facility operations; and, the contents of the facility SPCC Plan.

(2) Designate a person at each applicable facility who is accountable for discharge prevention and who reports to facility management.

(3) Schedule and conduct discharge prevention briefings for your oil-handling personnel at least once a year to assure adequate understanding of the SPCC Plan for that facility. Such briefings must highlight and describe known discharges as described in §112.1(b) or failures, malfunctioning components, and any recently developed precautionary measures.

(g) *Security (excluding oil production facilities).* (1) Fully fence each facility handling, processing, or storing oil, and lock and/or guard entrance gates when the facility is not in production or is unattended.

(2) Ensure that the master flow and drain valves and any other valves permitting direct outward flow of the container's contents to the surface have adequate security measures so that they remain in the closed position when in non-operating or non-standby status.

(3) Lock the starter control on each oil pump in the ''off'' position and locate it at a site accessible only to authorized personnel when the pump is in a non-operating or non-standby status.

(4) Securely cap or blank-flange the loading/unloading connections of oil pipelines or facility piping when not in service or when in standby service for an extended time. This security practice also applies to piping that is emptied of liquid content either by draining or by inert gas pressure.

(5) Provide facility lighting commensurate with the type and location of the facility that will assist in the:

(i) Discovery of discharges occurring during hours of darkness, both by operating personnel, if present, and by non-operating personnel (the general public, local police, etc.); and

(ii) Prevention of discharges occurring through acts of vandalism.

(h) *Facility tank car and tank truck loading/unloading rack (excluding offshore facilities).* (1) Where loading/unloading area drainage does not flow into a catchment basin or treatment facility designed to handle discharges, use a quick drainage system for tank car or tank truck loading and unloading areas. You must design any containment system to hold at least the maximum capacity of any single compartment of a tank car or tank truck loaded or unloaded at the facility.

(2) Provide an interlocked warning light or physical barrier system, warning signs, wheel chocks, or vehicle break interlock system in loading/unloading areas to prevent vehicles from departing before complete disconnection of flexible or fixed oil transfer lines.

(3) Prior to filling and departure of any tank car or tank truck, closely inspect for discharges the lowermost drain and all outlets of such vehicles, and if necessary, ensure that they are tightened, adjusted, or replaced to prevent liquid discharge while in transit.

(i) If a field-constructed aboveground container undergoes a repair, alteration, reconstruction, or a change in service that might affect the risk of a discharge or failure due to brittle fracture or other catastrophe, or has discharged oil or failed due to brittle fracture failure or other catastrophe, evaluate the container for risk of discharge or failure due to brittle fracture or other catastrophe, and as necessary, take appropriate action.

(j) In addition to the minimal prevention standards listed under this section, include in your Plan a complete

discussion of conformance with the applicable requirements and other effective discharge prevention and containment procedures listed in this part or any applicable more stringent State rules, regulations, and guidelines.

Subpart B—Requirements for Petroleum Oils and Non-Petroleum Oils, Except Animal Fats and Oils and Greases, and Fish and Marine Mammal Oils; and Vegetable Oils (Including Oils from Seeds, Nuts, Fruits, and Kernels)

SOURCE: 67 FR 47146, July 17, 2002, unless otherwise noted.

§ 112.8 Spill Prevention, Control, and Countermeasure Plan requirements for onshore facilities (excluding production facilities).

If you are the owner or operator of an onshore facility (excluding a production facility), you must:

(a) Meet the general requirements for the Plan listed under § 112.7, and the specific discharge prevention and containment procedures listed in this section.

(b) *Facility drainage.* (1) Restrain drainage from diked storage areas by valves to prevent a discharge into the drainage system or facility effluent treatment system, except where facility systems are designed to control such discharge. You may empty diked areas by pumps or ejectors; however, you must manually activate these pumps or ejectors and must inspect the condition of the accumulation before starting, to ensure no oil will be discharged.

(2) Use valves of manual, open-and-closed design, for the drainage of diked areas. You may not use flapper-type drain valves to drain diked areas. If your facility drainage drains directly into a watercourse and not into an on-site wastewater treatment plant, you must inspect and may drain uncontaminated retained stormwater, as provided in paragraphs (c)(3)(ii), (iii), and (iv) of this section.

(3) Design facility drainage systems from undiked areas with a potential for a discharge (such as where piping is located outside containment walls or where tank truck discharges may occur outside the loading area) to flow into ponds, lagoons, or catchment basins designed to retain oil or return it to the facility. You must not locate catchment basins in areas subject to periodic flooding.

(4) If facility drainage is not engineered as in paragraph (b)(3) of this section, equip the final discharge of all ditches inside the facility with a diversion system that would, in the event of an uncontrolled discharge, retain oil in the facility.

(5) Where drainage waters are treated in more than one treatment unit and such treatment is continuous, and pump transfer is needed, provide two ''lift'' pumps and permanently install at least one of the pumps. Whatever techniques you use, you must engineer facility drainage systems to prevent a discharge as described in § 112.1(b) in case there is an equipment failure or human error at the facility.

(c) *Bulk storage containers.* (1) Not use a container for the storage of oil unless its material and construction are compatible with the material stored and conditions of storage such as pressure and temperature.

(2) Construct all bulk storage container installations so that you provide a secondary means of containment for the entire capacity of the largest single container and sufficient freeboard to contain precipitation. You must ensure that diked areas are sufficiently impervious to contain discharged oil. Dikes, containment curbs, and pits are commonly employed for this purpose. You may also use an alternative system consisting of a drainage trench enclosure that must be arranged so that any discharge will terminate and be safely confined in a facility catchment basin or holding pond.

(3) Not allow drainage of uncontaminated rainwater from the diked area into a storm drain or discharge of an effluent into an open watercourse, lake, or pond, bypassing the facility treatment system unless you:

(i) Normally keep the bypass valve sealed closed.

(ii) Inspect the retained rainwater to ensure that its presence will not cause a discharge as described in § 112.1(b).

(iii) Open the bypass valve and reseal it following drainage under responsible supervision; and

(iv) Keep adequate records of such events, for example, any records required under permits issued in accordance with §§122.41(j)(2) and 122.41(m)(3) of this chapter.

(4) Protect any completely buried metallic storage tank installed on or after January 10, 1974 from corrosion by coatings or cathodic protection compatible with local soil conditions. You must regularly leak test such completely buried metallic storage tanks.

(5) Not use partially buried or bunkered metallic tanks for the storage of oil, unless you protect the buried section of the tank from corrosion. You must protect partially buried and bunkered tanks from corrosion by coatings or cathodic protection compatible with local soil conditions.

(6) Test each aboveground container for integrity on a regular schedule, and whenever you make material repairs. The frequency of and type of testing must take into account container size and design (such as floating roof, skid-mounted, elevated, or partially buried). You must combine visual inspection with another testing technique such as hydrostatic testing, radiographic testing, ultrasonic testing, acoustic emissions testing, or another system of non-destructive shell testing. You must keep comparison records and you must also inspect the container's supports and foundations. In addition, you must frequently inspect the outside of the container for signs of deterioration, discharges, or accumulation of oil inside diked areas. Records of inspections and tests kept under usual and customary business practices will suffice for purposes of this paragraph.

(7) Control leakage through defective internal heating coils by monitoring the steam return and exhaust lines for contamination from internal heating coils that discharge into an open watercourse, or pass the steam return or exhaust lines through a settling tank, skimmer, or other separation or retention system.

(8) Engineer or update each container installation in accordance with good engineering practice to avoid discharges. You must provide at least one of the following devices:

(i) High liquid level alarms with an audible or visual signal at a constantly attended operation or surveillance station. In smaller facilities an audible air vent may suffice.

(ii) High liquid level pump cutoff devices set to stop flow at a predetermined container content level.

(iii) Direct audible or code signal communication between the container gauger and the pumping station.

(iv) A fast response system for determining the liquid level of each bulk storage container such as digital computers, telepulse, or direct vision gauges. If you use this alternative, a person must be present to monitor gauges and the overall filling of bulk storage containers.

(v) You must regularly test liquid level sensing devices to ensure proper operation.

(9) Observe effluent treatment facilities frequently enough to detect possible system upsets that could cause a discharge as described in §112.1(b).

(10) Promptly correct visible discharges which result in a loss of oil from the container, including but not limited to seams, gaskets, piping, pumps, valves, rivets, and bolts. You must promptly remove any accumulations of oil in diked areas.

(11) Position or locate mobile or portable oil storage containers to prevent a discharge as described in §112.1(b). You must furnish a secondary means of containment, such as a dike or catchment basin, sufficient to contain the capacity of the largest single compartment or container with sufficient freeboard to contain precipitation.

(d) *Facility transfer operations, pumping, and facility process.* (1) Provide buried piping that is installed or replaced on or after August 16, 2002, with a protective wrapping and coating. You must also cathodically protect such buried piping installations or otherwise satisfy the corrosion protection standards for piping in part 280 of this chapter or a State program approved under part 281 of this chapter. If a section of buried line is exposed for any reason, you must carefully inspect it for deterioration. If you find corrosion damage,

you must undertake additional examination and corrective action as indicated by the magnitude of the damage.

(2) Cap or blank-flange the terminal connection at the transfer point and mark it as to origin when piping is not in service or is in standby service for an extended time.

(3) Properly design pipe supports to minimize abrasion and corrosion and allow for expansion and contraction.

(4) Regularly inspect all aboveground valves, piping, and appurtenances. During the inspection you must assess the general condition of items, such as flange joints, expansion joints, valve glands and bodies, catch pans, pipeline supports, locking of valves, and metal surfaces. You must also conduct integrity and leak testing of buried piping at the time of installation, modification, construction, relocation, or replacement.

(5) Warn all vehicles entering the facility to be sure that no vehicle will endanger aboveground piping or other oil transfer operations.

§ 112.9 Spill Prevention, Control, and Countermeasure Plan requirements for onshore oil production facilities.

If you are the owner or operator of an onshore production facility, you must:

(a) Meet the general requirements for the Plan listed under § 112.7, and the specific discharge prevention and containment procedures listed under this section.

(b) *Oil production facility drainage.* (1) At tank batteries and separation and treating areas where there is a reasonable possibility of a discharge as described in § 112.1(b), close and seal at all times drains of dikes or drains of equivalent measures required under § 112.7(c)(1), except when draining uncontaminated rainwater. Prior to drainage, you must inspect the diked area and take action as provided in § 112.8(c)(3)(ii), (iii), and (iv). You must remove accumulated oil on the rainwater and return it to storage or dispose of it in accordance with legally approved methods.

(2) Inspect at regularly scheduled intervals field drainage systems (such as drainage ditches or road ditches), and oil traps, sumps, or skimmers, for an accumulation of oil that may have resulted from any small discharge. You must promptly remove any accumulations of oil.

(c) *Oil production facility bulk storage containers.* (1) Not use a container for the storage of oil unless its material and construction are compatible with the material stored and the conditions of storage.

(2) Provide all tank battery, separation, and treating facility installations with a secondary means of containment for the entire capacity of the largest single container and sufficient freeboard to contain precipitation. You must safely confine drainage from undiked areas in a catchment basin or holding pond.

(3) Periodically and upon a regular schedule visually inspect each container of oil for deterioration and maintenance needs, including the foundation and support of each container that is on or above the surface of the ground.

(4) Engineer or update new and old tank battery installations in accordance with good engineering practice to prevent discharges. You must provide at least one of the following:

(i) Container capacity adequate to assure that a container will not overfill if a pumper/gauger is delayed in making regularly scheduled rounds.

(ii) Overflow equalizing lines between containers so that a full container can overflow to an adjacent container.

(iii) Vacuum protection adequate to prevent container collapse during a pipeline run or other transfer of oil from the container.

(iv) High level sensors to generate and transmit an alarm signal to the computer where the facility is subject to a computer production control system.

(d) *Facility transfer operations, oil production facility.* (1) Periodically and upon a regular schedule inspect all aboveground valves and piping associated with transfer operations for the general condition of flange joints, valve glands and bodies, drip pans, pipe supports, pumping well polish rod stuffing boxes, bleeder and gauge valves, and other such items.

(2) Inspect saltwater (oil field brine) disposal facilities often, particularly

following a sudden change in atmospheric temperature, to detect possible system upsets capable of causing a discharge.

(3) Have a program of flowline maintenance to prevent discharges from each flowline.

§ 112.10 Spill Prevention, Control, and Countermeasure Plan requirements for onshore oil drilling and workover facilities.

If you are the owner or operator of an onshore oil drilling and workover facility, you must:

(a) Meet the general requirements listed under § 112.7, and also meet the specific discharge prevention and containment procedures listed under this section.

(b) Position or locate mobile drilling or workover equipment so as to prevent a discharge as described in § 112.1(b).

(c) Provide catchment basins or diversion structures to intercept and contain discharges of fuel, crude oil, or oily drilling fluids.

(d) Install a blowout prevention (BOP) assembly and well control system before drilling below any casing string or during workover operations. The BOP assembly and well control system must be capable of controlling any well-head pressure that may be encountered while that BOP assembly and well control system are on the well.

§ 112.11 Spill Prevention, Control, and Countermeasure Plan requirements for offshore oil drilling, production, or workover facilities.

If you are the owner or operator of an offshore oil drilling, production, or workover facility, you must:

(a) Meet the general requirements listed under § 112.7, and also meet the specific discharge prevention and containment procedures listed under this section.

(b) Use oil drainage collection equipment to prevent and control small oil discharges around pumps, glands, valves, flanges, expansion joints, hoses, drain lines, separators, treaters, tanks, and associated equipment. You must control and direct facility drains toward a central collection sump to prevent the facility from having a discharge as described in § 112.1(b). Where drains and sumps are not practicable, you must remove oil contained in collection equipment as often as necessary to prevent overflow.

(c) For facilities employing a sump system, provide adequately sized sump and drains and make available a spare pump to remove liquid from the sump and assure that oil does not escape. You must employ a regularly scheduled preventive maintenance inspection and testing program to assure reliable operation of the liquid removal system and pump start-up device. Redundant automatic sump pumps and control devices may be required on some installations.

(d) At facilities with areas where separators and treaters are equipped with dump valves which predominantly fail in the closed position and where pollution risk is high, specially equip the facility to prevent the discharge of oil. You must prevent the discharge of oil by:

(1) Extending the flare line to a diked area if the separator is near shore;

(2) Equipping the separator with a high liquid level sensor that will automatically shut in wells producing to the separator; or

(3) Installing parallel redundant dump valves.

(e) Equip atmospheric storage or surge containers with high liquid level sensing devices that activate an alarm or control the flow, or otherwise prevent discharges.

(f) Equip pressure containers with high and low pressure sensing devices that activate an alarm or control the flow.

(g) Equip containers with suitable corrosion protection.

(h) Prepare and maintain at the facility a written procedure within the Plan for inspecting and testing pollution prevention equipment and systems.

(i) Conduct testing and inspection of the pollution prevention equipment and systems at the facility on a scheduled periodic basis, commensurate with the complexity, conditions, and circumstances of the facility and any other appropriate regulations. You

must use simulated discharges for testing and inspecting human and equipment pollution control and countermeasure systems.

(j) Describe in detailed records surface and subsurface well shut-in valves and devices in use at the facility for each well sufficiently to determine their method of activation or control, such as pressure differential, change in fluid or flow conditions, combination of pressure and flow, manual or remote control mechanisms.

(k) Install a BOP assembly and well control system during workover operations and before drilling below any casing string. The BOP assembly and well control system must be capable of controlling any well-head pressure that may be encountered while the BOP assembly and well control system are on the well.

(l) Equip all manifolds (headers) with check valves on individual flowlines.

(m) Equip the flowline with a high pressure sensing device and shut-in valve at the wellhead if the shut-in well pressure is greater than the working pressure of the flowline and manifold valves up to and including the header valves. Alternatively you may provide a pressure relief system for flowlines.

(n) Protect all piping appurtenant to the facility from corrosion, such as with protective coatings or cathodic protection.

(o) Adequately protect sub-marine piping appurtenant to the facility against environmental stresses and other activities such as fishing operations.

(p) Maintain sub-marine piping appurtenant to the facility in good operating condition at all times. You must periodically and according to a schedule inspect or test such piping for failures. You must document and keep a record of such inspections or tests at the facility.

Subpart C—Requirements for Animal Fats and Oils and Greases, and Fish and Marine Mammal Oils; and for Vegetable Oils, including Oils from Seeds, Nuts, Fruits, and Kernels.

SOURCE: 67 FR 57149, July 17, 2002, unless otherwise noted.

§ 112.12 Spill Prevention, Control, and Countermeasure Plan requirements for onshore facilities (excluding production facilities)

If you are the owner or operator of an onshore facility (excluding a production facility), you must:

(a) Meet the general requirements for the Plan listed under § 112.7, and the specific discharge prevention and containment procedures listed in this section.

(b) *Facility drainage.* (1) Restrain drainage from diked storage areas by valves to prevent a discharge into the drainage system or facility effluent treatment system, except where facility systems are designed to control such discharge. You may empty diked areas by pumps or ejectors; however, you must manually activate these pumps or ejectors and must inspect the condition of the accumulation before starting, to ensure no oil will be discharged.

(2) Use valves of manual, open-and-closed design, for the drainage of diked areas. You may not use flapper-type drain valves to drain diked areas. If your facility drainage drains directly into a watercourse and not into an on-site wastewater treatment plant, you must inspect and may drain uncontaminated retained stormwater, subject to the requirements of paragraphs (c)(3)(ii), (iii), and (iv) of this section.

(3) Design facility drainage systems from undiked areas with a potential for a discharge (such as where piping is located outside containment walls or where tank truck discharges may occur outside the loading area) to flow into ponds, lagoons, or catchment basins designed to retain oil or return it to the facility. You must not locate

catchment basins in areas subject to periodic flooding.

(4) If facility drainage is not engineered as in paragraph (b)(3) of this section, equip the final discharge of all ditches inside the facility with a diversion system that would, in the event of an uncontrolled discharge, retain oil in the facility.

(5) Where drainage waters are treated in more than one treatment unit and such treatment is continuous, and pump transfer is needed, provide two ''lift'' pumps and permanently install at least one of the pumps. Whatever techniques you use, you must engineer facility drainage systems to prevent a discharge as described in §112.1(b) in case there is an equipment failure or human error at the facility.

(c) *Bulk storage containers.* (1) Not use a container for the storage of oil unless its material and construction are compatible with the material stored and conditions of storage such as pressure and temperature.

(2) Construct all bulk storage container installations so that you provide a secondary means of containment for the entire capacity of the largest single container and sufficient freeboard to contain precipitation. You must ensure that diked areas are sufficiently impervious to contain discharged oil. Dikes, containment curbs, and pits are commonly employed for this purpose. You may also use an alternative system consisting of a drainage trench enclosure that must be arranged so that any discharge will terminate and be safely confined in a facility catchment basin or holding pond.

(3) Not allow drainage of uncontaminated rainwater from the diked area into a storm drain or discharge of an effluent into an open watercourse, lake, or pond, bypassing the facility treatment system unless you:

(i) Normally keep the bypass valve sealed closed.

(ii) Inspect the retained rainwater to ensure that its presence will not cause a discharge as described in §112.1(b).

(iii) Open the bypass valve and reseal it following drainage under responsible supervision; and

(iv) Keep adequate records of such events, for example, any records required under permits issued in accordance with §§122.41(j)(2) and 122.41(m)(3) of this chapter.

(4) Protect any completely buried metallic storage tank installed on or after January 10, 1974 from corrosion by coatings or cathodic protection compatible with local soil conditions. You must regularly leak test such completely buried metallic storage tanks.

(5) Not use partially buried or bunkered metallic tanks for the storage of oil, unless you protect the buried section of the tank from corrosion. You must protect partially buried and bunkered tanks from corrosion by coatings or cathodic protection compatible with local soil conditions.

(6) Test each aboveground container for integrity on a regular schedule, and whenever you make material repairs. The frequency of and type of testing must take into account container size and design (such as floating roof, skid-mounted, elevated, or partially buried). You must combine visual inspection with another testing technique such as hydrostatic testing, radiographic testing, ultrasonic testing, acoustic emissions testing, or another system of non-destructive shell testing. You must keep comparison records and you must also inspect the container's supports and foundations. In addition, you must frequently inspect the outside of the container for signs of deterioration, discharges, or accumulation of oil inside diked areas. Records of inspections and tests kept under usual and customary business practices will suffice for purposes of this paragraph.

(7) Control leakage through defective internal heating coils by monitoring the steam return and exhaust lines for contamination from internal heating coils that discharge into an open watercourse, or pass the steam return or exhaust lines through a settling tank, skimmer, or other separation or retention system.

(8) Engineer or update each container installation in accordance with good engineering practice to avoid discharges. You must provide at least one of the following devices:

(i) High liquid level alarms with an audible or visual signal at a constantly

attended operation or surveillance station. In smaller facilities an audible air vent may suffice.

(ii) High liquid level pump cutoff devices set to stop flow at a predetermined container content level.

(iii) Direct audible or code signal communication between the container gauger and the pumping station.

(iv) A fast response system for determining the liquid level of each bulk storage container such as digital computers, telepulse, or direct vision gauges. If you use this alternative, a person must be present to monitor gauges and the overall filling of bulk storage containers.

(v) You must regularly test liquid level sensing devices to ensure proper operation.

(9) Observe effluent treatment facilities frequently enough to detect possible system upsets that could cause a discharge as described in § 112.1(b).

(10) Promptly correct visible discharges which result in a loss of oil from the container, including but not limited to seams, gaskets, piping, pumps, valves, rivets, and bolts. You must promptly remove any accumulations of oil in diked areas.

(11) Position or locate mobile or portable oil storage containers to prevent a discharge as described in § 112.1(b). You must furnish a secondary means of containment, such as a dike or catchment basin, sufficient to contain the capacity of the largest single compartment or container with sufficient freeboard to contain precipitation.

(d) *Facility transfer operations, pumping, and facility process.* (1) Provide buried piping that is installed or replaced on or after August 16, 2002, with a protective wrapping and coating. You must also cathodically protect such buried piping installations or otherwise satisfy the corrosion protection standards for piping in part 280 of this chapter or a State program approved under part 281 of this chapter. If a section of buried line is exposed for any reason, you must carefully inspect it for deterioration. If you find corrosion damage, you must undertake additional examination and corrective action as indicated by the magnitude of the damage.

(2) Cap or blank-flange the terminal connection at the transfer point and mark it as to origin when piping is not in service or is in standby service for an extended time.

(3) Properly design pipe supports to minimize abrasion and corrosion and allow for expansion and contraction.

(4) Regularly inspect all aboveground valves, piping, and appurtenances. During the inspection you must assess the general condition of items, such as flange joints, expansion joints, valve glands and bodies, catch pans, pipeline supports, locking of valves, and metal surfaces. You must also conduct integrity and leak testing of buried piping at the time of installation, modification, construction, relocation, or replacement.

(5) Warn all vehicles entering the facility to be sure that no vehicle will endanger aboveground piping or other oil transfer operations.

§ 112.13 Spill Prevention, Control, and Countermeasure Plan requirements for onshore oil production facilities.

If you are the owner or operator of an onshore production facility, you must:

(a) Meet the general requirements for the Plan listed under § 112.7, and the specific discharge prevention and containment procedures listed under this section.

(b) *Oil production facility drainage.* (1) At tank batteries and separation and treating areas where there is a reasonable possibility of a discharge as described in § 112.1(b), close and seal at all times drains of dikes or drains of equivalent measures required under § 112.7(c)(1), except when draining uncontaminated rainwater. Prior to drainage, you must inspect the diked area and take action as provided in § 112.12(c)(3)(ii), (iii), and (iv). You must remove accumulated oil on the rainwater and return it to storage or dispose of it in accordance with legally approved methods.

(2) Inspect at regularly scheduled intervals field drainage systems (such as drainage ditches or road ditches), and oil traps, sumps, or skimmers, for an accumulation of oil that may have resulted from any small discharge. You must promptly remove any accumulations of oil.

(c) *Oil production facility bulk storage containers.* (1) Not use a container for

the storage of oil unless its material and construction are compatible with the material stored and the conditions of storage.

(2) Provide all tank battery, separation, and treating facility installations with a secondary means of containment for the entire capacity of the largest single container and sufficient freeboard to contain precipitation. You must safely confine drainage from undiked areas in a catchment basin or holding pond.

(3) Periodically and upon a regular schedule visually inspect each container of oil for deterioration and maintenance needs, including the foundation and support of each container that is on or above the surface of the ground.

(4) Engineer or update new and old tank battery installations in accordance with good engineering practice to prevent discharges. You must provide at least one of the following:

(i) Container capacity adequate to assure that a container will not overfill if a pumper/gauger is delayed in making regularly scheduled rounds.

(ii) Overflow equalizing lines between containers so that a full container can overflow to an adjacent container.

(iii) Vacuum protection adequate to prevent container collapse during a pipeline run or other transfer of oil from the container.

(iv) High level sensors to generate and transmit an alarm signal to the computer where the facility is subject to a computer production control system.

(d) *Facility transfer operations, oil production facility.* (1) Periodically and upon a regular schedule inspect all aboveground valves and piping associated with transfer operations for the general condition of flange joints, valve glands and bodies, drip pans, pipe supports, pumping well polish rod stuffing boxes, bleeder and gauge valves, and other such items.

(2) Inspect saltwater (oil field brine) disposal facilities often, particularly following a sudden change in atmospheric temperature, to detect possible system upsets capable of causing a discharge.

(3) Have a program of flowline maintenance to prevent discharges from each flowline.

§ 112.14 Spill Prevention, Control, and Countermeasure Plan requirements for onshore oil drilling and workover facilities.

If you are the owner or operator of an onshore oil drilling and workover facility, you must:

(a) Meet the general requirements listed under § 112.7, and also meet the specific discharge prevention and containment procedures listed under this section.

(b) Position or locate mobile drilling or workover equipment so as to prevent a discharge as described in § 112.1(b).

(c) Provide catchment basins or diversion structures to intercept and contain discharges of fuel, crude oil, or oily drilling fluids.

(d) Install a blowout prevention (BOP) assembly and well control system before drilling below any casing string or during workover operations. The BOP assembly and well control system must be capable of controlling any well-head pressure that may be encountered while that BOP assembly and well control system are on the well.

§ 112.15 Spill Prevention, Control, and Countermeasure Plan requirements for offshore oil drilling, production, or workover facilities.

If you are the owner or operator of an offshore oil drilling, production, or workover facility, you must:

(a) Meet the general requirements listed under § 112.7, and also meet the specific discharge prevention and containment procedures listed under this section.

(b) Use oil drainage collection equipment to prevent and control small oil discharges around pumps, glands, valves, flanges, expansion joints, hoses, drain lines, separators, treaters, tanks, and associated equipment. You must control and direct facility drains toward a central collection sump to prevent the facility from having a discharge as described in § 112.1(b). Where drains and sumps are not practicable,

you must remove oil contained in collection equipment as often as necessary to prevent overflow.

(c) For facilities employing a sump system, provide adequately sized sump and drains and make available a spare pump to remove liquid from the sump and assure that oil does not escape. You must employ a regularly scheduled preventive maintenance inspection and testing program to assure reliable operation of the liquid removal system and pump start-up device. Redundant automatic sump pumps and control devices may be required on some installations.

(d) At facilities with areas where separators and treaters are equipped with dump valves which predominantly fail in the closed position and where pollution risk is high, specially equip the facility to prevent the discharge of oil. You must prevent the discharge of oil by:

(1) Extending the flare line to a diked area if the separator is near shore;

(2) Equipping the separator with a high liquid level sensor that will automatically shut in wells producing to the separator; or

(3) Installing parallel redundant dump valves.

(e) Equip atmospheric storage or surge containers with high liquid level sensing devices that activate an alarm or control the flow, or otherwise prevent discharges.

(f) Equip pressure containers with high and low pressure sensing devices that activate an alarm or control the flow.

(g) Equip containers with suitable corrosion protection.

(h) Prepare and maintain at the facility a written procedure within the Plan for inspecting and testing pollution prevention equipment and systems.

(i) Conduct testing and inspection of the pollution prevention equipment and systems at the facility on a scheduled periodic basis, commensurate with the complexity, conditions, and circumstances of the facility and any other appropriate regulations. You must use simulated discharges for testing and inspecting human and equipment pollution control and countermeasure systems.

(j) Describe in detailed records surface and subsurface well shut-in valves and devices in use at the facility for each well sufficiently to determine their method of activation or control, such as pressure differential, change in fluid or flow conditions, combination of pressure and flow, manual or remote control mechanisms.

(k) Install a BOP assembly and well control system during workover operations and before drilling below any casing string. The BOP assembly and well control system must be capable of controlling any well-head pressure that may be encountered while that BOP assembly and well control system are on the well.

(l) Equip all manifolds (headers) with check valves on individual flowlines.

(m) Equip the flowline with a high pressure sensing device and shut-in valve at the wellhead if the shut-in well pressure is greater than the working pressure of the flowline and manifold valves up to and including the header valves. Alternatively you may provide a pressure relief system for flowlines.

(n) Protect all piping appurtenant to the facility from corrosion, such as with protective coatings or cathodic protection.

(o) Adequately protect sub-marine piping appurtenant to the facility against environmental stresses and other activities such as fishing operations.

(p) Maintain sub-marine piping appurtenant to the facility in good operating condition at all times. You must periodically and according to a schedule inspect or test such piping for failures. You must document and keep a record of such inspections or tests at the facility.

Subpart D—Response Requirements

§ 112.20 Facility response plans.

(a) The owner or operator of any non-transportation-related onshore facility that, because of its location, could reasonably be expected to cause substantial harm to the environment by discharging oil into or on the navigable waters or adjoining shorelines shall prepare and submit a facility response

plan to the Regional Administrator, according to the following provisions:

(1) For the owner or operator of a facility in operation on or before February 18, 1993 who is required to prepare and submit a response plan under 33 U.S.C. 1321(j)(5), the Oil Pollution Act of 1990 (Pub. L. 101–380, 33 U.S.C. 2701 *et seq.*) requires the submission of a response plan that satisfies the requirements of 33 U.S.C. 1321(j)(5) no later than February 18, 1993.

(i) The owner or operator of an existing facility that was in operation on or before February 18, 1993 who submitted a response plan by February 18, 1993 shall revise the response plan to satisfy the requirements of this section and resubmit the response plan or updated portions of the response plan to the Regional Administrator by February 18, 1995.

(ii) The owner or operator of an existing facility in operation on or before February 18, 1993 who failed to submit a response plan by February 18, 1993 shall prepare and submit a response plan that satisfies the requirements of this section to the Regional Administrator before August 30, 1994.

(2) The owner or operator of a facility in operation on or after August 30, 1994 that satisfies the criteria in paragraph (f)(1) of this section or that is notified by the Regional Administrator pursuant to paragraph (b) of this section shall prepare and submit a facility response plan that satisfies the requirements of this section to the Regional Administrator.

(i) For a facility that commenced operations after February 18, 1993 but prior to August 30, 1994, and is required to prepare and submit a response plan based on the criteria in paragraph (f)(1) of this section, the owner or operator shall submit the response plan or updated portions of the response plan, along with a completed version of the response plan cover sheet contained in Appendix F to this part, to the Regional Administrator prior to August 30, 1994.

(ii) For a newly constructed facility that commences operation after August 30, 1994, and is required to prepare and submit a response plan based on the criteria in paragraph (f)(1) of this section, the owner or operator shall submit the response plan, along with a completed version of the response plan cover sheet contained in Appendix F to this part, to the Regional Administrator prior to the start of operations (adjustments to the response plan to reflect changes that occur at the facility during the start-up phase of operations must be submitted to the Regional Administrator after an operational trial period of 60 days).

(iii) For a facility required to prepare and submit a response plan after August 30, 1994, as a result of a planned change in design, construction, operation, or maintenance that renders the facility subject to the criteria in paragraph (f)(1) of this section, the owner or operator shall submit the response plan, along with a completed version of the response plan cover sheet contained in Appendix F to this part, to the Regional Administrator before the portion of the facility undergoing change commences operations (adjustments to the response plan to reflect changes that occur at the facility during the start-up phase of operations must be submitted to the Regional Administrator after an operational trial period of 60 days).

(iv) For a facility required to prepare and submit a response plan after August 30, 1994, as a result of an unplanned event or change in facility characteristics that renders the facility subject to the criteria in paragraph (f)(1) of this section, the owner or operator shall submit the response plan, along with a completed version of the response plan cover sheet contained in Appendix F to this part, to the Regional Administrator within six months of the unplanned event or change.

(3) In the event the owner or operator of a facility that is required to prepare and submit a response plan uses an alternative formula that is comparable to one contained in Appendix C to this part to evaluate the criterion in paragraph (f)(1)(ii)(B) or (f)(1)(ii)(C) of this section, the owner or operator shall attach documentation to the response plan cover sheet contained in Appendix F to this part that demonstrates the reliability and analytical soundness of the alternative formula.

(4) *Preparation and submission of response plans—Animal fat and vegetable oil facilities.* The owner or operator of any non-transportation-related facility that handles, stores, or transports animal fats and vegetable oils must prepare and submit a facility response plan as follows:

(i) *Facilities with approved plans.* The owner or operator of a facility with a facility response plan that has been approved under paragraph (c) of this section by July 31, 2000 need not prepare or submit a revised plan except as otherwise required by paragraphs (b), (c), or (d) of this section.

(ii) *Facilities with plans that have been submitted to the Regional Administrator.* Except for facilities with approved plans as provided in paragraph (a)(4)(i) of this section, the owner or operator of a facility that has submitted a response plan to the Regional Administrator prior to July 31, 2000 must review the plan to determine if it meets or exceeds the applicable provisions of this part. An owner or operator need not prepare or submit a new plan if the existing plan meets or exceeds the applicable provisions of this part. If the plan does not meet or exceed the applicable provisions of this part, the owner or operator must prepare and submit a new plan by September 28, 2000.

(iii) *Newly regulated facilities.* The owner or operator of a newly constructed facility that commences operation after July 31, 2000 must prepare and submit a plan to the Regional Administrator in accordance with paragraph (a)(2)(ii) of this section. The plan must meet or exceed the applicable provisions of this part. The owner or operator of an existing facility that must prepare and submit a plan after July 31, 2000 as a result of a planned or unplanned change in facility characteristics that causes the facility to become regulated under paragraph (f)(1) of this section, must prepare and submit a plan to the Regional Administrator in accordance with paragraph (a)(2)(iii) or (iv) of this section, as appropriate. The plan must meet or exceed the applicable provisions of this part.

(iv) *Facilities amending existing plans.* The owner or operator of a facility submitting an amended plan in accordance with paragraph (d) of this section after July 31, 2000, including plans that had been previously approved, must also review the plan to determine if it meets or exceeds the applicable provisions of this part. If the plan does not meet or exceed the applicable provisions of this part, the owner or operator must revise and resubmit revised portions of an amended plan to the Regional Administrator in accordance with paragraph (d) of this section, as appropriate. The plan must meet or exceed the applicable provisions of this part.

(b)(1) The Regional Administrator may at any time require the owner or operator of any non-transportation-related onshore facility to prepare and submit a facility response plan under this section after considering the factors in paragraph (f)(2) of this section. If such a determination is made, the Regional Administrator shall notify the facility owner or operator in writing and shall provide a basis for the determination. If the Regional Administrator notifies the owner or operator in writing of the requirement to prepare and submit a response plan under this section, the owner or operator of the facility shall submit the response plan to the Regional Administrator within six months of receipt of such written notification.

(2) The Regional Administrator shall review plans submitted by such facilities to determine whether the facility could, because of its location, reasonably be expected to cause significant and substantial harm to the environment by discharging oil into or on the navigable waters or adjoining shorelines.

(c) The Regional Administrator shall determine whether a facility could, because of its location, reasonably be expected to cause significant and substantial harm to the environment by discharging oil into or on the navigable waters or adjoining shorelines, based on the factors in paragraph (f)(3) of this section. If such a determination is made, the Regional Administrator shall notify the owner or operator of the facility in writing and:

(1) Promptly review the facility response plan;

(2) Require amendments to any response plan that does not meet the requirements of this section;

(3) Approve any response plan that meets the requirements of this section; and

(4) Review each response plan periodically thereafter on a schedule established by the Regional Administrator provided that the period between plan reviews does not exceed five years.

(d)(1) The owner or operator of a facility for which a response plan is required under this part shall revise and resubmit revised portions of the response plan within 60 days of each facility change that materially may affect the response to a worst case discharge, including:

(i) A change in the facility's configuration that materially alters the information included in the response plan;

(ii) A change in the type of oil handled, stored, or transferred that materially alters the required response resources;

(iii) A material change in capabilities of the oil spill removal organization(s) that provide equipment and personnel to respond to discharges of oil described in paragraph (h)(5) of this section;

(iv) A material change in the facility's spill prevention and response equipment or emergency response procedures; and

(v) Any other changes that materially affect the implementation of the response plan.

(2) Except as provided in paragraph (d)(1) of this section, amendments to personnel and telephone number lists included in the response plan and a change in the oil spill removal organization(s) that does not result in a material change in support capabilities do not require approval by the Regional Administrator. Facility owners or operators shall provide a copy of such changes to the Regional Administrator as the revisions occur.

(3) The owner or operator of a facility that submits changes to a response plan as provided in paragraph (d)(1) or (d)(2) of this section shall provide the EPA-issued facility identification number (where one has been assigned) with the changes.

(4) The Regional Administrator shall review for approval changes to a response plan submitted pursuant to paragraph (d)(1) of this section for a facility determined pursuant to paragraph (f)(3) of this section to have the potential to cause significant and substantial harm to the environment.

(e) If the owner or operator of a facility determines pursuant to paragraph (a)(2) of this section that the facility could not, because of its location, reasonably be expected to cause substantial harm to the environment by discharging oil into or on the navigable waters or adjoining shorelines, the owner or operator shall complete and maintain at the facility the certification form contained in Appendix C to this part and, in the event an alternative formula that is comparable to one contained in Appendix C to this part is used to evaluate the criterion in paragraph (f)(1)(ii)(B) or (f)(1)(ii)(C) of this section, the owner or operator shall attach documentation to the certification form that demonstrates the reliability and analytical soundness of the comparable formula and shall notify the Regional Administrator in writing that an alternative formula was used.

(f)(1) A facility could, because of its location, reasonably be expected to cause substantial harm to the environment by discharging oil into or on the navigable waters or adjoining shorelines pursuant to paragraph (a)(2) of this section, if it meets any of the following criteria applied in accordance with the flowchart contained in Attachment C-I to Appendix C to this part:

(i) The facility transfers oil over water to or from vessels and has a total oil storage capacity greater than or equal to 42,000 gallons; or

(ii) The facility's total oil storage capacity is greater than or equal to 1 million gallons, and one of the following is true:

(A) The facility does not have secondary containment for each aboveground storage area sufficiently large to contain the capacity of the largest aboveground oil storage tank within each storage area plus sufficient freeboard to allow for precipitation;

(B) The facility is located at a distance (as calculated using the appropriate formula in Appendix C to this part or a comparable formula) such that a discharge from the facility could cause injury to fish and wildlife and sensitive environments. For further description of fish and wildlife and sensitive environments, see Appendices I, II, and III of the ''Guidance for Facility and Vessel Response Plans: Fish and Wildlife and Sensitive Environments'' (see Appendix E to this part, section 13, for availability) and the applicable Area Contingency Plan prepared pursuant to section 311(j)(4) of the Clean Water Act;

(C) The facility is located at a distance (as calculated using the appropriate formula in Appendix C to this part or a comparable formula) such that a discharge from the facility would shut down a public drinking water intake; or

(D) The facility has had a reportable oil discharge in an amount greater than or equal to 10,000 gallons within the last 5 years.

(2)(i) To determine whether a facility could, because of its location, reasonably be expected to cause substantial harm to the environment by discharging oil into or on the navigable waters or adjoining shorelines pursuant to paragraph (b) of this section, the Regional Administrator shall consider the following:

(A) Type of transfer operation;

(B) Oil storage capacity;

(C) Lack of secondary containment;

(D) Proximity to fish and wildlife and sensitive environments and other areas determined by the Regional Administrator to possess ecological value;

(E) Proximity to drinking water intakes;

(F) Spill history; and

(G) Other site-specific characteristics and environmental factors that the Regional Administrator determines to be relevant to protecting the environment from harm by discharges of oil into or on navigable waters or adjoining shorelines.

(ii) Any person, including a member of the public or any representative from a Federal, State, or local agency who believes that a facility subject to this section could, because of its location, reasonably be expected to cause substantial harm to the environment by discharging oil into or on the navigable waters or adjoining shorelines may petition the Regional Administrator to determine whether the facility meets the criteria in paragraph (f)(2)(i) of this section. Such petition shall include a discussion of how the factors in paragraph (f)(2)(i) of this section apply to the facility in question. The RA shall consider such petitions and respond in an appropriate amount of time.

(3) To determine whether a facility could, because of its location, reasonably be expected to cause significant and substantial harm to the environment by discharging oil into or on the navigable waters or adjoining shorelines, the Regional Administrator may consider the factors in paragraph (f)(2) of this section as well as the following:

(i) Frequency of past discharges;

(ii) Proximity to navigable waters;

(iii) Age of oil storage tanks; and

(iv) Other facility-specific and Region-specific information, including local impacts on public health.

(g)(1) All facility response plans shall be consistent with the requirements of the National Oil and Hazardous Substance Pollution Contingency Plan (40 CFR part 300) and applicable Area Contingency Plans prepared pursuant to section 311(j)(4) of the Clean Water Act. The facility response plan should be coordinated with the local emergency response plan developed by the local emergency planning committee under section 303 of Title III of the Superfund Amendments and Reauthorization Act of 1986 (42 U.S.C. 11001 et seq.). Upon request, the owner or operator should provide a copy of the facility response plan to the local emergency planning committee or State emergency response commission.

(2) The owner or operator shall review relevant portions of the National Oil and Hazardous Substances Pollution Contingency Plan and applicable Area Contingency Plan annually and, if necessary, revise the facility response plan to ensure consistency with these plans.

(3) The owner or operator shall review and update the facility response

plan periodically to reflect changes at the facility.

(h) A response plan shall follow the format of the model facility-specific response plan included in Appendix F to this part, unless you have prepared an equivalent response plan acceptable to the Regional Administrator to meet State or other Federal requirements. A response plan that does not follow the specified format in Appendix F to this part shall have an emergency response action plan as specified in paragraphs (h)(1) of this section and be supplemented with a cross-reference section to identify the location of the elements listed in paragraphs (h)(2) through (h)(10) of this section. To meet the requirements of this part, a response plan shall address the following elements, as further described in Appendix F to this part:

(1) *Emergency response action plan.* The response plan shall include an emergency response action plan in the format specified in paragraphs (h)(1)(i) through (viii) of this section that is maintained in the front of the response plan, or as a separate document accompanying the response plan, and that includes the following information:

(i) The identity and telephone number of a qualified individual having full authority, including contracting authority, to implement removal actions;

(ii) The identity of individuals or organizations to be contacted in the event of a discharge so that immediate communications between the qualified individual identified in paragraph (h)(1) of this section and the appropriate Federal officials and the persons providing response personnel and equipment can be ensured;

(iii) A description of information to pass to response personnel in the event of a reportable discharge;

(iv) A description of the facility's response equipment and its location;

(v) A description of response personnel capabilities, including the duties of persons at the facility during a response action and their response times and qualifications;

(vi) Plans for evacuation of the facility and a reference to community evacuation plans, as appropriate;

(vii) A description of immediate measures to secure the source of the discharge, and to provide adequate containment and drainage of discharged oil; and

(viii) A diagram of the facility.

(2) *Facility information.* The response plan shall identify and discuss the location and type of the facility, the identity and tenure of the present owner and operator, and the identity of the qualified individual identified in paragraph (h)(1) of this section.

(3) *Information about emergency response.* The response plan shall include:

(i) The identity of private personnel and equipment necessary to remove to the maximum extent practicable a worst case discharge and other discharges of oil described in paragraph (h)(5) of this section, and to mitigate or prevent a substantial threat of a worst case discharge (To identify response resources to meet the facility response plan requirements of this section, owners or operators shall follow Appendix E to this part or, where not appropriate, shall clearly demonstrate in the response plan why use of Appendix E of this part is not appropriate at the facility and make comparable arrangements for response resources);

(ii) Evidence of contracts or other approved means for ensuring the availability of such personnel and equipment;

(iii) The identity and the telephone number of individuals or organizations to be contacted in the event of a discharge so that immediate communications between the qualified individual identified in paragraph (h)(1) of this section and the appropriate Federal official and the persons providing response personnel and equipment can be ensured;

(iv) A description of information to pass to response personnel in the event of a reportable discharge;

(v) A description of response personnel capabilities, including the duties of persons at the facility during a response action and their response times and qualifications;

(vi) A description of the facility's response equipment, the location of the equipment, and equipment testing;

(vii) Plans for evacuation of the facility and a reference to community evacuation plans, as appropriate;

(viii) A diagram of evacuation routes; and

(ix) A description of the duties of the qualified individual identified in paragraph (h)(1) of this section, that include:

(A) Activate internal alarms and hazard communication systems to notify all facility personnel;

(B) Notify all response personnel, as needed;

(C) Identify the character, exact source, amount, and extent of the release, as well as the other items needed for notification;

(D) Notify and provide necessary information to the appropriate Federal, State, and local authorities with designated response roles, including the National Response Center, State Emergency Response Commission, and Local Emergency Planning Committee;

(E) Assess the interaction of the discharged substance with water and/or other substances stored at the facility and notify response personnel at the scene of that assessment;

(F) Assess the possible hazards to human health and the environment due to the release. This assessment must consider both the direct and indirect effects of the release (i.e., the effects of any toxic, irritating, or asphyxiating gases that may be generated, or the effects of any hazardous surface water runoffs from water or chemical agents used to control fire and heat-induced explosion);

(G) Assess and implement prompt removal actions to contain and remove the substance released;

(H) Coordinate rescue and response actions as previously arranged with all response personnel;

(I) Use authority to immediately access company funding to initiate cleanup activities; and

(J) Direct cleanup activities until properly relieved of this responsibility.

(4) *Hazard evaluation.* The response plan shall discuss the facility's known or reasonably identifiable history of discharges reportable under 40 CFR part 110 for the entire life of the facility and shall identify areas within the facility where discharges could occur and what the potential effects of the discharges would be on the affected environment. To assess the range of areas potentially affected, owners or operators shall, where appropriate, consider the distance calculated in paragraph (f)(1)(ii) of this section to determine whether a facility could, because of its location, reasonably be expected to cause substantial harm to the environment by discharging oil into or on the navigable waters or adjoining shorelines.

(5) *Response planning levels.* The response plan shall include discussion of specific planning scenarios for:

(i) A worst case discharge, as calculated using the appropriate worksheet in Appendix D to this part. In cases where the Regional Administrator determines that the worst case discharge volume calculated by the facility is not appropriate, the Regional Administrator may specify the worst case discharge amount to be used for response planning at the facility. For complexes, the worst case planning quantity shall be the larger of the amounts calculated for each component of the facility;

(ii) A discharge of 2,100 gallons or less, provided that this amount is less than the worst case discharge amount. For complexes, this planning quantity shall be the larger of the amounts calculated for each component of the facility; and

(iii) A discharge greater than 2,100 gallons and less than or equal to 36,000 gallons or 10 percent of the capacity of the largest tank at the facility, whichever is less, provided that this amount is less than the worst case discharge amount. For complexes, this planning quantity shall be the larger of the amounts calculated for each component of the facility.

(6) *Discharge detection systems.* The response plan shall describe the procedures and equipment used to detect discharges.

(7) *Plan implementation.* The response plan shall describe:

(i) Response actions to be carried out by facility personnel or contracted personnel under the response plan to ensure the safety of the facility and to mitigate or prevent discharges described in paragraph (h)(5) of this section or the substantial threat of such discharges;

(ii) A description of the equipment to be used for each scenario;

(iii) Plans to dispose of contaminated cleanup materials; and

(iv) Measures to provide adequate containment and drainage of discharged oil.

(8) *Self-inspection, drills/exercises, and response training.* The response plan shall include:

(i) A checklist and record of inspections for tanks, secondary containment, and response equipment;

(ii) A description of the drill/exercise program to be carried out under the response plan as described in § 112.21;

(iii) A description of the training program to be carried out under the response plan as described in § 112.21; and

(iv) Logs of discharge prevention meetings, training sessions, and drills/exercises. These logs may be maintained as an annex to the response plan.

(9) *Diagrams.* The response plan shall include site plan and drainage plan diagrams.

(10) *Security systems.* The response plan shall include a description of facility security systems.

(11) *Response plan cover sheet.* The response plan shall include a completed response plan cover sheet provided in Section 2.0 of Appendix F to this part.

(i)(1) In the event the owner or operator of a facility does not agree with the Regional Administrator's determination that the facility could, because of its location, reasonably be expected to cause substantial harm or significant and substantial harm to the environment by discharging oil into or on the navigable waters or adjoining shorelines, or that amendments to the facility response plan are necessary prior to approval, such as changes to the worst case discharge planning volume, the owner or operator may submit a request for reconsideration to the Regional Administrator and provide additional information and data in writing to support the request. The request and accompanying information must be submitted to the Regional Administrator within 60 days of receipt of notice of the Regional Administrator's original decision. The Regional Administrator shall consider the request and render a decision as rapidly as practicable.

(2) In the event the owner or operator of a facility believes a change in the facility's classification status is warranted because of an unplanned event or change in the facility's characteristics (i.e., substantial harm or significant and substantial harm), the owner or operator may submit a request for reconsideration to the Regional Administrator and provide additional information and data in writing to support the request. The Regional Administrator shall consider the request and render a decision as rapidly as practicable.

(3) After a request for reconsideration under paragraph (i)(1) or (i)(2) of this section has been denied by the Regional Administrator, an owner or operator may appeal a determination made by the Regional Administrator. The appeal shall be made to the EPA Administrator and shall be made in writing within 60 days of receipt of the decision from the Regional Administrator that the request for reconsideration was denied. A complete copy of the appeal must be sent to the Regional Administrator at the time the appeal is made. The appeal shall contain a clear and concise statement of the issues and points of fact in the case. It also may contain additional information from the owner or operator, or from any other person. The EPA Administrator may request additional information from the owner or operator, or from any other person. The EPA Administrator shall render a decision as rapidly as practicable and shall notify the owner or operator of the decision.

[59 FR 34098, July 1, 1994, as amended at 65 FR 40798, June 30, 2000; 66 FR 34560, June 29, 2001; 67 FR 47151, July 17, 2002]

§ 112.21 Facility response training and drills/exercises.

(a) The owner or operator of any facility required to prepare a facility response plan under § 112.20 shall develop and implement a facility response training program and a drill/exercise program that satisfy the requirements of this section. The owner or operator shall describe the programs in the response plan as provided in § 112.20(h)(8).

STANDARD FOR THE INSPECTION OF ABOVEGROUND STORAGE TANKS

SP001
ISSUED SEPTEMBER 2011
5th EDITION

Steel Tank Institute
A Division of STI/SPFA
944 Donata Court
Lake Zurich, IL 60047
847/438-8265
Fax: 847/438-8766
www.steeltank.com

COPYRIGHT© 2011 Steel Tank Institute

TABLE OF CONTENTS

SECTION	TITLE	PAGE
	Preface	2
1.0	General	3
2.0	Definitions	4
3.0	Safety Considerations	7
4.0	AST Inspector Qualifications	9
5.0	Inspection Schedule	10
6.0	Periodic AST Inspections	11
7.0	Formal External Inspection Guidelines	12
8.0	Formal Internal Inspection Guidelines	14
9.0	Leak Testing Methods	15
10.0	Suitability for Continued Service	15
11.0	Recordkeeping	16
	References	17
	Appendix A – Supplemental Technical Information	18
	Appendix B – Inspection of Field-Erected ASTs	22
	Appendix C – Periodic Inspection Checklists	25
	Disclaimer	40

COPYRIGHT© 2011 Steel Tank Institute

PREFACE

The Steel Tank Institute (STI), formed in 1916, is a not-for-profit organization whose purpose is to secure co-operative action in advancing by all lawful means the common purposes of its members and to promote activities designed to enable the industry to conduct itself with the greatest economy and efficiency. It is further the purpose of STI to cooperate with other industries, organizations and government bodies in the development of reliable standards which advance industry manufacturing techniques to solve market-related problems.

This Standard was developed by the Steel Tank Institute AST Inspection Standards Committee, comprised of the following members and alternates:

Chuck Travelstead, Chair
Brown-Minneapolis Tank
Innovative Tank Solutions
Albuquerque, NM

Bill Herdman, Co-Chair
Kennedy Tank & Manufacturing Co.
Indianapolis, IN

John Albert
Missouri Department of Agriculture
Weights and Measures Division
Jefferson City, MO

Steve Allwein
Morrison Brothers Co.
Severna Park, MD

Alan Bakeberg
South Dakota Petroleum Release
Compensation Fund
Pierre, SD

Bill Baker
Pennsylvania Department of Environmental Protection
Harrisburg, PA

Greg Bareta, PE
Wisconsin Department of Commerce
Bureau of Storage Tank Regulation
Madison, WI

Matt Bjornson
Motor Fuels Division Director, PMAA
Bjornson Oil Company
Cavalier, ND

Dr. Barbara Carr
US EPA Region V
Chicago, IL

Roger Claff, PE
American Petroleum Institute
Washington, DC

Dave Darling, PE
American Coatings Association
Washington, DC

Carl Greer, Jr.
Service Welding & Machine Company
Louisville, KY

Kevin Kupitz
Tank Consultants, Inc.
Lake in the Hills, IL

Tim Laughlin, PE
North Carolina Petroleum Marketers Association
Raleigh, NC

Gary Morris, PE
ExxonMobil Refining and Supply Company
Yardley, PA

Phil Myers, PE
PEMY Consulting
Pleasant Hill, CA

Tim Woofter
Stanwade Metal Products, Inc.
Hartford, OH

Jim O'Day
O'Day Equipment, Inc.
Fargo, ND

Troy Swackhammer
U.S. EPA Oil Center
Washington, DC

Sonny Underwood
Mid-South Steel Products, Inc.
Cape Girardeau, MO

Wiley Wilhelm, PE
LCMF, LLC
Anchorage, AK

Dana Schmidt, PE
Staff Liaison, Steel Tank Institute
Lake Zurich, IL

COPYRIGHT© 2011 Steel Tank Institute

1.0 GENERAL

1.1 This Standard provides inspection and evaluation criteria required to determine the suitability for continued service of aboveground storage tanks (AST) until the next scheduled inspection. The purpose of conducting inspections is to identify the condition of and changes to the AST.

1.2 This Standard is intended for use by organizations and/or individuals who are knowledgeable and experienced in aboveground tank inspection. Note that the items included in this Standard are minimum requirements; other documents may have requirements that are more stringent. When applicable federal, state and local laws and regulations concerning tank inspection are more stringent than the requirements of this Standard, then these laws and regulations shall apply.

1.3 OTHER STANDARDS

1.3.1 Only aboveground tanks included in the scope of this Standard are applicable for inspection per this Standard.

1.3.2 Other standards, recommended practices and other equivalent engineering and best practices exist that provide alternative inspection requirements for tanks defined within the scope of this Standard and for tanks outside the scope of this Standard. For example, see API Standard 653, *Tank Inspection, Repair, Alteration, and Reconstruction*, for additional information pertaining to tanks built to API Standard 650 and API Specification 12C tanks; and API 12R1, *Recommended Practice for Setting, Maintenance, Inspection, Operation, and Repair of Tanks in Production Service*, for tanks employed in production service or other similar service.

1.4 OWNER'S RESPONSIBILITY

1.4.1 The owner is responsible for compliance with fire codes, local ordinances, and other applicable rules and regulations. The owner may want to retain assistance from specialists to aid in regulatory compliance, safe operations and installations in accordance with recognized industry standards.

1.4.2 The owner shall verify that persons working on ASTs understand and address the hazards associated with the contents of the ASTs, as well as safe entry and procedures associated with those ASTs.

1.4.3 The owner's inspector is responsible for performing the periodic AST inspections and documenting the results in accordance with this Standard.

1.4.4 The owner has the responsibility to address corrective actions identified in inspection reports.

1.5 SCOPE

1.5.1 This Standard applies to the inspection of aboveground storage tanks. These storage tanks include shop-fabricated tanks, field-erected tanks and portable containers as defined in this Standard, as well as their containment systems. The requirements for field-erected tanks are covered separately in Appendix B.

1.5.2 This Standard applies to ASTs storing stable, flammable and combustible liquids at atmospheric pressure with a specific gravity less than approximately 1.0.

1.5.3 This Standard applies to ASTs storing liquids with operating temperatures between ambient temperature and 200 degrees F (93.3°C).

1.6 At a minimum, the following tank components shall be inspected (as applicable):

- Primary tank
- Secondary tank
- Tank supports
- Tank anchors
- Tank foundation and external supports
- Tank gauges and alarms
- Overfill valves and alarms
- Insulation covering
- Tank appurtenances
- Normal vents
- Emergency vents
- Release prevention barriers
- Spill control systems

COPYRIGHT© 2011 Steel Tank Institute

2.0 DEFINITIONS

ABOVEGROUND STORAGE TANK (AST) – a tank or container designed to operate at pressures ranging from atmospheric pressure through a gauge pressure of one psig measured at the top of the tank. The tank may be sitting on the ground or set on supports, such as saddles, skids or legs, etc., and may be installed in a vault. Included are shop-fabricated tanks, field-erected tanks, and portable containers with a capacity of 55 U.S. gallons (208 liters) or greater.

CONTINUOUS RELEASE DETECTION METHOD (CRDM) – a means of detecting a release of liquid through inherent design. CRDM is passive because it does not require sensors or power to operate. Liquid releases are visually detected by facility operators. The system shall be designed in accordance with good engineering practice. Several acceptable and commonly used CRDM systems are as follows:

- Release prevention barrier (RPB) (described in definition of release prevention barrier).
- Secondary containment AST, including double-wall AST or double-bottom AST.
- Elevated AST, with or without release prevention barrier.

CORROSION RATE – the rate of degradation of materials due to chemical reactions with their environment. The rate of corrosion is established by the Certified Inspector as the maximum shell thickness loss divided by the operational service time.

CERTIFIED INSPECTOR – a tank inspector who meets the certification requirements identified in Section 4.2 of this Standard.

DOUBLE-WALL AST – An AST manufactured as a tank-within-a-tank. An interstitial (annular) space between the two tanks is formed, which allows for testing of both tanks for tightness as well as monitoring for leakage into the space.

ELEVATED AST – an AST which is not in contact with the ground and which is raised above the surface of the ground or bottom of a vault using tanks supports. An elevated AST allows for a visual external inspection of the bottom of the primary tank. Examples of elevated tanks are tanks constructed on grillage or grating, or tanks on supports.

FIELD-ERECTED AST – a welded carbon or stainless steel AST erected onsite where it will be used. For the purpose of this Standard, ASTs meeting either of the following descriptions are to be inspected as field-erected ASTs:

a. An AST where the nameplate (or other identifying means, such as accurate drawings) indicates that it is a field-erected AST. These are limited to a maximum shell height of 50 feet (15.24 meters) and a maximum diameter of 30 feet (9.14 meters).
b. An AST without a nameplate (or other identifying means such as accurate drawings) that is more than 50,000 U.S. gallons (189,271 liters) and a maximum shell height of 50 feet (15.24 meters) and a maximum diameter of 30 feet (9.14 meters).

FORMAL EXTERNAL INSPECTION (FEI) – a documented external inspection conducted by a Certified Inspector to assess the condition of the AST and determine its suitability for continued service without entry into the AST interior.

FORMAL INTERNAL INSPECTION (FII) - a documented internal inspection conducted by a Certified Inspector to assess the internal and external condition of the AST and determine its suitability for continued service. FII includes the inspection requirements of a Formal External Inspection. A Formal Internal Inspection satisfies the requirements of a Formal External Inspection and shall be considered equivalent to or better than a Formal External Inspection for the purposes of scheduling.

INSPECTION PLAN – a written plan developed by the owner or a Professional Engineer that details the inspection requirements for a facility.

COPYRIGHT© 2011 Steel Tank Institute

INTERSTICE – in a double-wall AST, the space between the primary tank and secondary tank; in a double-bottom AST, the space or void between the two bottoms. This space may be open or closed to the atmosphere and may be monitored or tested by vacuum or leak detection equipment or by visual inspection.

LEAK TESTING METHOD (LTM) – a point-in-time test method to determine if an AST is liquid-tight. Leak testing is not preventative: it provides an indication only if the AST's integrity has already been breached. Therefore, it may only be used as a tank integrity measure or as a supplement to other inspection procedures. LTMs may include the following technologies:

- Gas pressure decay (includes vacuum decay)
- Gas pressure soap bubble testing
- Gas tracers (e.g., helium tracer)
- Soil tracers (chemical marker)
- Mass measurement
- Level measurement
- Hydrostatic test

LOCKOUT/TAGOUT – a procedure for affixing lockout or tagout devices to energy isolating equipment and for otherwise disabling machines or equipment to prevent unexpected energization, startup or release of stored energy. The intent of the procedure is to prevent injury to employees and to comply with the following OSHA (Occupational Safety & Health Administration) regulations or their equivalent:

- 29 CFR part 1910.147, *The Control of Hazardous Energy (Lockout/Tagout)*
- 29 CFR part 1910.331 to 1910.333, *Electrical Lockout/Tagout.*

MAGNETIC FLUX LEAKAGE (MFL) – a method used to nondestructively inspect ferromagnetic materials such as a carbon steel floor plate. A magnetic field is applied to steel to near-saturation, so that it cannot hold any additional field. In the presence of a flaw (wall thinning), some of the magnetic flux escapes or "leaks" into the surrounding environment, where magnetic sensors detect it and quantitatively report a flaw signal. Once the flaw is detected and identified, an ultrasonic thickness scan (UTS) is required in the area to quantify the flaw. This method is commonly used on AST floors (MFL floorscan) to determine the underside condition of the tank floor.

MANWAY – an opening designed to allow personnel entry into an AST.

MICROBIAL-INFLUENCED/INDUCED CORROSION (MIC) – corrosion accelerated/caused by certain microbes. Depending on the type of bacteria, the degree of microbial activity, and the thickness and type of AST material, MIC is characterized by a high rate of corrosion. It sometimes penetrates tank walls and bottoms in two years or less. It is typically characterized by a ring-like pattern of cone or crater-shaped penetrations.

NONDESTRUCTIVE EXAMINATION (NDE) – the development and application of technical methods to examine materials and/or components in ways that do not impair future usefulness and serviceability, in order to detect, locate, measure, interpret and evaluate flaws.

OVERFILL PREVENTION - Systems, procedures or devices used to prevent liquid in ASTs from running over or spilling out of the AST during the filling process. A person who is physically present and in control of a shutoff device during the entire tank filling process is an acceptable procedure to achieve overfill protection.

OWNER - the legal entity having control and responsibility for the operation of the existing AST and storage facilities.

OWNER'S INSPECTOR – the owner or owner's designee responsible for conducting owner's periodic AST inspections.

PAINT FAILURE – significant peeling, cracking, spalling, blistering, pitting and chipping, etc. of the paint or coating on an AST, resulting in the exposure of the metal surface and corrosion of the tank shell.

COPYRIGHT© 2011 Steel Tank Institute

PERIODIC AST INSPECTION - a visual, documented inspection conducted by an owner's inspector, to assess the AST's general condition, without suspending AST operations or removing the AST from service.

PORTABLE CONTAINER - a closed AST having a liquid capacity equal to or greater than 55 U.S. gallons and not intended for fixed installation.

PRIMARY TANK – the tank in direct contact with the liquid stored.

PROFESSIONAL ENGINEER (PE) – a person who has fulfilled specific education and/or experience requirements under state licensure laws and has received a license to practice engineering.

RELEASE PREVENTION BARRIER (RPB) – a liquid containment barrier that is installed under the AST. Its purpose is to divert leaks toward the perimeter of the AST where they can be easily detected, as well as to prevent liquid from contaminating the environment. RPBs are composed of materials compatible with the liquid stored in the AST and meet appropriate engineering standards. Examples are steel (as in steel double-bottom tanks), concrete, elastomeric liners or other suitable materials, provided the above criteria are met.

REMOTE IMPOUNDING - a spill control system that uses a sloped spillway to channel liquid releases away from an AST to a contained collection area that is remote from important facilities, adjoining property or waterways. The containment area is sized for the capacity of the largest AST plus sufficient freeboard to allow for precipitation. For the purposes of this Standard, remote impounding is equivalent to secondary containment. Remote impounding is further defined in NFPA 30.

SECONDARY CONTAINMENT SYSTEM - provides a secondary means of containment for the entire volumetric capacity of the largest single AST within a common dike/berm plus sufficient freeboard to contain precipitation. The secondary containment system is to be designed to contain a spill until it can be discovered and cleaned up. It must be constructed according to accepted good engineering practices. (Note: See NFPA 30 and/or 40 CFR Part 112 and other local requirements for additional definitions.)

SECONDARY CONTAINMENT DIKE/BERM – a spill control system consisting of walls and a floor completely surrounding single/multiple ASTs. It provides a secondary means of containment for the entire capacity of the largest single AST plus sufficient freeboard to contain precipitation and the displacement volume present below the dike wall of other ASTs in the containment area. The secondary containment dike/berm is to be constructed according to accepted good engineering practices.

SECONDARY CONTAINMENT AST – an AST with an integral secondary containment dike. These dikes may be pans, boxes or containers, and are designed to contain the contents of the primary tank if it fails. A secondary containment AST may be open or closed to the atmosphere. If precipitation cannot readily enter the integral secondary containment, then the containment need only be sized for the primary tank volume. If precipitation can enter the secondary containment, then the secondary containment is sized to contain the primary tank volume plus with sufficient freeboard to contain precipitation.

SECONDARY TANK – the outer wall of a double-wall AST.

SHELL – for the purposes of this Standard, the AST shell includes the roof, bottom, head or wall of the AST.

SHOP-FABRICATED – a welded carbon or stainless steel AST fabricated in a manufacturing facility, or an AST not otherwise identified as field-erected with a volume less than or equal to 50,000 U.S. gallons (189,271 liters).

SINGLE-WALL AST – an AST with only one wall or shell.

COPYRIGHT© 2011 Steel Tank Institute

SPILL CONTROL - a means of preventing a release of liquid to the environment, including adjoining property and waterways. Spill control methods include :

- Remote impounding
- Secondary containment dike/berm
- Secondary containment AST
- Secondary containment system

SUITABILITY FOR CONTINUED SERVICE – the determination that an AST's condition is adequate for continued use based on the criteria presented in this Standard.

TANK IN CONTACT WITH THE GROUND – an AST that does not include a release prevention barrier and has some part of its primary tank shell in direct contact with the ground or soil. Therefore, direct inspection of all exterior surfaces of the AST cannot be conducted from the tank exterior.

TANK SUPPORTS – structures designed to elevate an AST above the ground. These include saddles, skids, beams, legs, and similar structures.

ULTRASONIC TESTING SCAN (UTS) – an ultrasonic scan to evaluate the corrosion on the opposite side of the inspection surface using an ultrasonic flaw detector. This inspection is to be performed by an NDT examiner certified in accordance with ASNT-TC-1A (or equivalent), per paragraph 4.3.2 of this Standard.

ULTRASONIC THICKNESS TESTING (UTT) – a point thickness reading taken by a competent person, per paragraph 4.3.3 of this Standard, utilizing a digital ultrasonic thickness meter.

3.0 SAFETY CONSIDERATIONS

3.1 The hazards associated with cleaning, entry, inspection, testing, maintenance or other aspects of ASTs are significant. Safety considerations and controls should be established prior to undertaking physical activities associated with ASTs.

3.2 This Standard does not address all applicable health and safety risks and precautions with respect to particular materials, conditions or procedures. Information concerning safety and health risks and precautions should be obtained from applicable standards, regulations, and suppliers of materials and material safety data sheets.

3.3 The following activities may be regulated. Consideration to the relevant requirements and best management practices shall be included in an inspection:

- Breaking lines, isolating, and release of equipment
- General work permit
- Hot work
- Lockout/tagout
- Gas testing
- Contractor safety
- Respiratory protection
- Tank cleaning, repair, and dismantling
- Confined space entry

3.4 Plans to enter an AST require development or use of appropriate safety procedures, precautions and requirements. The owner, the contractors and all persons associated with the AST inspection, cleaning or entry, shall review these safety procedures prior to the start of work.

3.4.1 Before the inspection begins, check for the accumulation of harmful vapors around and in the AST. Refer to the following documents for additional information:

- NFPA 326, *Standard for the Safeguarding of Tanks and Containers for Entry, Cleaning or Repair*
- API RP 2015, *Requirements for Safe Entry and Cleaning of Petroleum Storage Tanks*

COPYRIGHT© 2011 Steel Tank Institute

- API RP 2016, *Guidelines and Procedures for Entering and Cleaning Petroleum Storage Tanks*

3.4.2 Each AST entry requires an Emergency Action Plan (EAP). The owner and contractor must develop the EAP together. The EAP describes the actions required for personal safety from fire and other emergencies and includes the following requirements, as well as others:

- SCBA (self contained breathing apparatus) and lifelines on site, as well as rescuers trained in their use.
- Establishment and review of emergency escape routes and procedures with authorized entrants.
- Establishment of an assembly area and procedures to account for all authorized entrants after emergency evacuation is complete.
- Establishment of rescue and first-aid duties for those authorized entrants assigned to perform them.

3.4.3 After plans, procedures and administrative controls are in place and before entering the AST, isolate the AST by locking out and tagging all energy sources associated with the AST. Line isolation shall be at the closest practical flange to the equipment or space. Lockout/tagout establishes a procedure for affixing lockout or tagout devices to energy-isolating equipment and for otherwise disabling machines or equipment to prevent unexpected energization, startup or release of stored energy. Its intent is to prevent injury to employees, and to comply with the following OSHA regulations or their equivalent:

- 29 CFR part 1910.147, *The Control of Hazardous Energy (Lockout/Tagout*)
- 29 CFR part 1910.331 to 1910.333, *Electrical Lockout/Tagout*
- 29 CFR part 1910.146, *Permit-required Confined Spaces*

3.4.4 The atmosphere inside the space must be tested and confirmed safe before authorized entrants may enter without wearing supplied-air respiratory protection or SCBA. Continuous atmospheric monitoring is best. At minimum, test the space for the following, and in the following order:

3.4.4.1 Oxygen

3.4.4.2 Flammable vapors

3.4.4.3 Toxics

3.5 Inspect the roof and support structures for soundness. Inspect stairs, ladders and platforms to determine that they can safely support equipment and people before accessing them. Corrosion may first attack the deck plate at the edge of a fixed roof and at the rafters in the center of the roof. Therefore, in addition to entry hazards, there are those associated with the access to AST roofs. For AST roofs where one side is not visible, it may be necessary to check the plate thickness with ultrasonic instrument or hammer test it to verify its adequacy. If there is a doubt, place planks that span structural members on the roof and walk on the planks instead of directly on the roof. These same hazards may also apply to other AST walking surfaces, such as the surfaces of floating roofs. Guidance for this is covered in API RP 2016, *Guidelines and Procedures for Entering and Cleaning Petroleum Storage Tanks*.

3.6 A safety analysis shall be conducted prior to a leak test. Some leak testing scenarios may be hazardous. For example, the leak test methods referenced in 9.1.1 require that either an inert gas be used or that the tank be thoroughly cleaned and gas free prior to testing and pressurizing an AST. Combining hydrocarbons with air generates a potentially hazardous atmosphere. Each test method may have unique hazards; these shall be considered and addressed in a pre-test safety plan prior to testing activities. A qualified person shall review the safety plan.

COPYRIGHT© 2011 Steel Tank Institute

4.0 AST INSPECTOR QUALIFICATIONS

4.1 OWNER'S INSPECTOR QUALIFICATIONS

4.1.1 Periodic Inspections are to be performed by an owner's inspector.

4.1.2 The personnel performing these inspections shall be knowledgeable about storage facility operations, the type of AST and its associated components, and characteristics of the liquid stored. Owner's inspectors must also be familiar with pumping, piping and valve operations of the AST system.

4.2 CERTIFIED INSPECTOR QUALIFICATIONS

4.2.1 Formal External (FEI) and Formal Internal Inspections (FII) are to be performed by a Certified Inspector.

4.2.2 A Certified Inspector shall be certified by one or more of the following:

4.2.2.1 American Petroleum Institute (API) Standard 653 *Authorized Inspector Certification with STI SP001 Adjunct Certification*.

4.2.2.2 Steel Tank Institute (STI) *Certified SP001 AST Tank System Inspector*.

4.2.2.3 Additional certifications as may be required by individual states or other governing bodies.

4.3 NDT EXAMINER QUALIFICATIONS

4.3.1 Non-destructive test (NDT) examiner personnel performing non-destructive examinations shall meet the qualifications described below, but need not be certified in accordance with paragraph 4.2. The results of NDE work, however, must be considered in the evaluation of the tank by the Certified Inspector.

4.3.2 NDT personnel referenced within this Standard shall be qualified in accordance with their employer's written practices, which must be in accordance with the American Society for Nondestructive Testing's (ASNT) document SNT-TC-1A, *Personnel Qualification and Certification in Nondestructive Testing*," unless otherwise noted within this Standard.

4.3.2.1 Referenced within this Standard are the following nondestructive techniques. All inspectors performing the following inspection methods shall be certified per 4.3.2.

- MT – Magnetic particle testing
- RT – Radiographic testing
- UT – Ultrasonic testing
- MFL – Magnetic flux leakage
- PT – Penetrant testing

4.3.3 Testing personnel performing ultrasonic thickness (UTT) point readings are required to have the minimum training described in this paragraph to operate a digital ultrasonic thickness meter. A digital ultrasonic thickness meter is an ultrasonic unit which is only used to obtain a point thickness reading displaying the resulting specimen thickness. It does not cover the use of ultrasonic flaw detectors or interpretation of an A, B or C scan unit readout.

4.3.3.1 The operator of the digital ultrasonic thickness unit must be trained for a minimum of one hour by a person competent in the operation, calibration and set-up of the unit. Training is usually performed by the manufacturer or manufacturer's representative upon delivery of the unit. This training shall be documented and specifically state that the trainee has received at least one hour of training in the proper operation, calibration and set up of the unit. The unit manufacturer and model shall be noted on the documentation. The trainer shall sign his name on the documentation to attest that the training has been completed and the trainee is now proficient in the use of that ultrasonic digital meter. At the time of training, the trainee shall have all of the tools and materials needed to carry out the proper function of the meter. These tools and materials are as follows:

- Step wedge of the correct thickness range and material for the desired application.
- Ultrasonic couplant appropriate for the desired application.
- Ultrasonic transducer of the correct type, frequency and diameter for the desired application.

COPYRIGHT© 2011 Steel Tank Institute

4.3.3.2 Testing personnel shall be aware of the many factors that affect performance and accuracy of a digital thickness meter, such as:

- Equipment calibration
- Surface roughness of test specimen
- Coupling technique
- Couplant
- Curvature of test piece
- Taper or eccentricity of the test specimen
- Acoustic properties of the material to be tested
- Temperature of the test specimen

4.3.3.3 Surface coatings can have a significant effect on the performance and accuracy of the thickness reading. It is recommended that the surface coating be removed in test areas. Alternatively, there are digital thickness meters specifically made for inspection of metal through coatings; these can be used without removal of the coating.

5.0 INSPECTION SCHEDULE

5.1 The owner shall use the AST's type, size and type of installation, corrosion rate and previous inspection history, if any, to develop a schedule of applicable types of inspections for each AST, per Table 5.5. The interval for the initial inspection shall begin from the AST's initial service date, if known. For the purposes of this requirement, the initial service date is the date on which liquid was first placed in the tank. If the initial service date is not known, the owner shall be responsible for establishing and documenting the initial service date.

5.2 Owners who have an inspection plan shall use this Standard to establish inspection criteria for ASTs described in this Standard, using the AST type, size and previous inspection history, type of installation and corrosion rate.

5.3 Certified inspectors using this Standard to conduct inspections shall use the AST type, size, previous inspection history, type of installation, corrosion rate and the schedule determined by the owner,.

5.4 **AST CATEGORIES USED IN TABLE 5.5**

5.4.1 Category 1 - ASTs with spill control, and with CRDM

5.4.2 Category 2 - ASTs with spill control and without CRDM

5.4.3 Category 3 - ASTs without spill control and without CRDM

5.4.4 Table 5.4 shows some typical tank types and their corresponding AST category

TABLE 5.4 EXAMPLE TANK CONFIGURATION AND AST CATEGORY

Tank Configuration	Tank has CRDM?	Tank has Spill Control?	AST Category
Single wall AST in contact with ground	no	no	3
Single wall AST in contact with ground	no	yes	2
Elevated tank	yes	yes	1
AST with RPB	yes	yes	1
AST with double-bottom	yes	yes	1
Double-wall AST with overfill prevention	yes	yes	1
Double-wall AST without overfill prevention	yes	no	3
Vertical tank resting on concrete (conforms with definition of RPB)	yes	yes	1
Vertical tank resting on concrete (conforms with definition of RPB)	yes	no	3

COPYRIGHT© 2011 Steel Tank Institute

5.4 **IN TABLE 5.5 USE THE FOLLOWING DESIGNATIONS:**

5.5.1 P – Periodic AST inspection
Refer to Section 6

5.5.2 E – Formal External Inspection by Certified Inspector
Refer to Section 7

5.5.3 I – Formal Internal Inspection by Certified Inspector
Refer to Section 8

5.5.4 L – leak test by owner or owner's designee
Refer to Section 9

5.5.5 ( ) indicates maximum inspection interval in years. For example, E (5) indicates Formal External Inspection every 5 years.

TABLE 5.5 TABLE OF INSPECTION SCHEDULES

AST Type and Size (U.S. gallons)		Category 1	Category 2	Category 3
Shop-Fabricated ASTs	0 – 1100 (0-4164 liters)	P	P	P, E&L(10)
	1101 - 5,000 (4168-18,927 liters)	P	P, E&L(10)	[P, E&L(5), I(10)] or [P, L(2), E(5)]
	5,001 - 30,000 (18,931-113,562 liters)	P, E(20)	[P, E(10), I(20)] or [P, E(5), L(10)]	[P, E&L(5), I(10)] or [P, L(1), E(5)]
	30,001 - 50,000 (113,566-189,271 liters)	P, E(20)	P, E&L(5), I(15)	P, E&L(5), I(10)
Portable Containers		P	P	P**

** Owner shall either discontinue use of portable container for storage or have the portable container DOT (Department of Transportation) tested and recertified per the following schedule (refer to Section 9.0):
Plastic portable container - every 7 years
Steel portable container - every 12 years
Stainless Steel portable container - every 17 years

6.0 PERIODIC AST INSPECTIONS

6.1 Periodic AST inspections are to be conducted by owner's inspector. Checklists for periodic AST inspections are found in Appendix C of this Standard. These are to be used as a guide for recording inspection data.

6.2 The owner's inspector must meet the requirements of paragraph 4.1.

6.3 Review prior inspection, repair and alteration data before each inspection. Note special conditions for a particular AST.

6.4 The owner's inspector is to complete the *STI SP001 AST Record* for each AST or tank site as designated in the checklists. Note special conditions and changes or alterations to the tank.

6.5 The owner's inspector is to complete the *STI SP001 Monthly Inspection Checklist* each month. Take note of instructions on the checklist. Note special conditions.

6.6 The owner's inspector is to complete the *STI SP001 Annual Inspection Checklist* each year. Take note of instructions on the checklist. Note special conditions.

6.7 For portable containers, the owner's inspector is to complete only the *STI SP001 Portable Container Monthly Inspection Checklist* each month. Take note of the instructions on the checklist. Note special conditions.

6.7.1 As an alternative, if documentation is kept on-site for each portable container that indicates how long each has been kept at the facility, then the owner's inspector is to complete only the *STI*

COPYRIGHT© 2011 Steel Tank Institute

SP001 Portable Container Monthly Inspection Checklist each month for containers onsite for 91 days or more. Take note of the instructions on the checklist. Note special conditions.

6.8 Additional requirements for field-erected tanks are included in Appendix B.

6.9 Refer to Section 10.0 for conditions that warrant immediate action.

6.10 By removing water or taking other corrective action on a regular basis, harmful MIC is prevented. Monitor for water accumulation monthly. If corrosion is found due to MIC, treat the AST with a proper biocide or otherwise sterilize the AST. In addition, take necessary steps to repair or remove the AST from service if warranted by the extent of the corrosion, per Section 10.0.

7.0 FORMAL EXTERNAL INSPECTION (FEI) GUIDELINES

7.1 GENERAL

7.1.1 Formal External Inspections are to be performed by Certified Inspectors, per paragraph 4.2.

7.1.2 These Guidelines are minimum inspection requirements. There are numerous AST configurations and components and it is the responsibility of the Certified Inspector to identify and properly inspect them to conform to the owner's requirements and/or industry standards. The inspector or the inspection company shall develop detailed checklists that identify, record and document all aspects of each inspection.

7.1.3 Review prior formal and periodic inspections, repair and alteration data before each inspection.

7.1.4 Record AST nameplate data, if available, and check the information included for accuracy against actual conditions. Record AST data, inspection findings, and problems identified.

7.1.5 Inspect the fabrication of the AST against applicable industry standards.

7.1.6 Inspect the AST foundations for indications of settlement, cracking, exposed rebar or general disrepair. Inspect for areas of wash-out and voids under the AST. Confirm that the ground is sloped away from the AST and that there is no soil resting against the side of the AST, covering parts of the shell or bottom extension. Inspect for standing water against the AST or the indication of drainage problems.

7.1.7 Visually inspect the condition of the AST's supports. Severe cracking or spalling of concrete supports shall be noted and evaluated. If there are pad plates between the supports and the shell, inspect the condition. Inspect the supports to be sure that they are sitting securely on the foundation or grade. If the supports are welded to the shell, inspect the welds for visible signs of stress or deterioration.

7.1.8 Identify and record the type and condition of the secondary containment, spill control and CRDM, if present.

7.1.8.1 Visually inspect the general condition of the containment area to be sure that it is in good condition and that there is not a breach in the containment structure. Note changes from the original design and installation information if available.

7.1.8.2 Inspect for foreign materials in the containment area. Inspect for liquid in the containment system and CRDM. If liquid is present, find the source and report findings. Record other ASTs or containers within the same containment area.

7.1.8.3 Make sure that the drain valves are operable and in good condition. Report penetrations through the secondary containment that may compromise the integrity of the containment area. Report penetrations that are likely to lead to failure of the secondary containment should the liquid level of water or liquid rise to these penetrations.

7.1.9 Inspect and verify the operability of ancillary equipment including the following items:

7.1.9.1 Inspect piping and piping connections for visible signs of stress or leakage, such as severe corrosion, rusted bolted connections or other severe degradation.

7.1.9.2 Inspect normal and emergency vents and pressure/vacuum devices. Verify that the devices are of adequate size and capacity, operable and in good condition. Refer to the device manufacturer's literature, typical industry venting requirements and other appropriate resources. Record the types and locations of these devices.

7.1.9.3 Inspect primary tank level gauge and secondary tank interstitial gauge for free movement and to determine if the floats, guides and attachments are in working order. Check that the liquid level gauge length is sized correctly for the tank diameter. Inspect the alarms connected to the level gauge for operability and for a complete loop and circuit from the primary sensor to the final annunciation or alarm point.

COPYRIGHT© 2011 Steel Tank Institute

7.1.10 Inspect the bonding and grounding system of the AST, if present. (Refer to NFPA 780 *Standard for the Installation of Lightning Protection Systems.*)

7.1.11 Inspect stairways, handrails and platforms for broken welds, bent members and corrosion.

7.1.12 Inspect the coating on the AST shell, heads and supports for paint failure.

7.2 **DETERMINE THE ORIGINAL SHELL THICKNESS OF THE AST**. Suggested methods are:

7.2.1 Review the original tank documentation, such as drawings and packing lists.

7.2.2 Consult the tank manufacturer.

7.2.3 Examine the tank labels for evidence of a widely accepted tank standard, such as Underwriters Laboratories Standard UL 142, etc. Consult the referenced standard to determine the minimum design shell thickness.

7.2.4 Measure the tank thickness of several areas of the tank that have no visible corrosion or pitting. The average of these measurements will result in a minimum shell thickness measurement.

7.3 **HORIZONTAL AST**- Requirements in addition to the applicable items in 7.1:

7.3.1 Inspect shell plates and welds for indications of exterior corrosion, buckling or distortion, as well as for cracking, pinholes or mechanical damage. Inspect the shell of the AST and the ancillary equipment for signs of distortion and stress.

7.3.1.1 Take and record UTT readings and the location of the reading of each plate or shell course in areas accessible without entering the AST. Readings must be concentrated in areas where corrosion is likely to occur. If significant internal corrosion is detected, further investigation using ultrasonic testing scans (UTS) is required. If applicable, include areas marked from previous readings. Refer to Section 10.0.

7.3.2 Inspect shell attachments for changes made after the AST was fabricated. Refer to previous drawings or make new sketches that show all the appurtenances, attachments and nozzle locations on the AST shell and heads or roof. Record repads (reinforcing plates) and/or insert plates. Inspect attachment welds for signs of stress and corrosion.

7.4 **VERTICAL OR RECTANGULAR AST** - Requirements in addition to the applicable items in 7.1:

7.4.1 Shell surface – Refer to 7.3.1 and 7.3.2

7.4.2 Shell attachments – Refer to 7.3.2

7.4.3 Vertical AST roof - Inspect for low areas on the roof and standing water that may corrode the roof areas. Inspect for paint failure, holes and corrosion. Take UTT readings on the roof and record results. If possible, measure thicknesses in previously measured areas for corrosion rate determination. If significant corrosion is detected, further investigation using ultrasonic testing scans (UTS) is required. Refer to Section 10.0

7.5 **DOUBLE-WALL AND DOUBLE-BOTTOM AST** - Requirements in addition to the applicable items in 7.1:

7.5.1 Verify that the leak detection equipment or method is operating, if the tank is so equipped.

7.5.2 Check for leaks or the presence of liquid in the interstice.

7.5.3 Double-bottom ASTs require UTT readings of areas that are single-wall as described in paragraph 7.3.1.1 above. Double-wall ASTs do not require UTT readings.

7.6 **INSULATED AST** - Requirements in addition to the applicable items in 7.1 to 7.4:

7.6.1 Remove the insulation in areas where mold or moisture is present or points where moisture is likely to accumulate and examine the metal surface for signs of signification corrosion. Consider the wicking effect of water in the insulation, particularly in the lower exterior portion of the tank shell.

7.6.2 If insulation damage is suspected, remove sections of the insulation to check for corrosion. Continue removing the insulation until the extent and nature of the corrosion has been established.

7.6.3 Take UTT readings of the shell and record results including, if applicable, areas marked from previous readings. If significant internal corrosion is detected, further investigation using ultrasonic testing scans (UTS) is required. Refer to Section 10.0

7.7 Additional requirements for field-erected ASTs are included in Appendix B.

7.8 In the final report, include field data, measurements, pictures, drawings, tables and an inspection summary. In the summary, identify unacceptable conditions and recommended corrective actions. Determine the suitability for continued service of the AST per Section 10.0. Include the next scheduled Formal External Inspection (FEI) or Formal Internal Inspection (FII), as applicable. Include the inspector's name and certification number in the report.

COPYRIGHT© 2011 Steel Tank Institute

8.0 FORMAL INTERNAL INSPECTION GUIDELINES

8.1 **GENERAL**

8.1.1 Formal Internal Inspections (FII) are to be performed by Certified Inspectors per paragraph 4.2.

8.1.2 These Guidelines are minimum inspection requirements. There are numerous AST configurations and components; it is the responsibility of the Certified Inspector to identify and properly inspect them to conform to the owner's requirements and/or industry standards. The inspector or the inspection company shall develop detailed checklists that identify, record and document all aspects of each inspection.

8.1.3 A Formal Internal Inspection includes the requirements of a Formal External Inspection with the addition of the requirements described below. Refer to paragraphs 7.1 to 7.7 for Formal External Inspection requirements.

8.1.4 Double-wall tanks and secondary containment tanks may be inspected by checking the interstice for liquid or by other equivalent methods.

8.1.5 For elevated ASTs where all external surfaces are accessible, the internal inspection requirements may be satisfied with an examination from the exterior by using such methods as UTS. For all other situations, entry into the interior of the AST is necessary to assess the condition of all surfaces.

8.2 **HORIZONTAL AST INTERNAL INSPECTION**

8.2.1 Identify, measure, inspect and record all AST internal appurtenances. Inspect for mechanical damage, corrosion, cracking, etc. Inspect for deteriorating or corroding internal attachments and piping. Take thickness readings of internal structures and record the readings.

8.2.2 Inspect the welds for cracking by visual inspection or, if necessary, by magnetic particle (MT) inspection or equivalent method.

8.2.3 Internal NDT Inspection

8.2.3.1 AST assessment:

8.2.3.1.1 Ultrasonic testing equipment that is capable of scanning the tank (UTS), rather than measuring only individual points (UTT), is the preferred method of testing. Personnel performing UTS are to be qualified per paragraph 4.3.2.

8.2.3.1.2 If ultrasonic testing equipment that is capable of scanning the tank (as described in 8.2.3.1.1) is not practical, use equipment that tests individual points. In this case, take UTT measurements of at least 15 points per each 12 inches x 12 inches (0.3 meters x 0.3 meters) square area of the shell that is in contact with the ground. Any questionable areas are to be assessed by UTS per 8.2.3.1.1.

8.2.3.2 Perform a vacuum box (VB) examination of questionable welds to check for leaks.

8.2.3.3 Refer to Section 10.0 for criteria for suitability for continued service.

8.3 **VERTICAL AND RECTANGULAR AST INTERNAL INSPECTION**

8.3.1 Identify, record, inspect and measure all AST internal surfaces and appurtenances. Inspect AST internals to check for mechanical damage, corrosion, cracking, etc. Check for deteriorating or corroding internal attachments and piping. Take thickness readings of internal structures and record the readings.

8.3.2 Inspect the welds for cracking by visual inspection or, if necessary, by magnetic particle (MT) inspection or equivalent method.

8.3.3 Internal NDT Inspection

8.3.3.1 AST floor thickness assessment is required as follows:

8.3.3.1.1 Complete coverage of the AST floor is recommended, due to random corrosion characteristics of metal in contact with the ground. Inspection of the AST floor is recommended using inspection methods capable of determining the underside floor condition, such as UTS, MFL followed by UTS of questionable areas, or other equivalent methods.

8.3.3.1.2 If ultrasonic testing equipment that is capable of scanning the tank (as described in 8.3.3.1.1) is not practical, use equipment that tests individual points. In this case, take UTT measurements of at least 15 points per each 12 inches x 12 inches (0.3 meters x 0.3 meters) square area of the shell that is in contact with the ground. Any questionable areas are to be assessed by UTS per 8.3.3.1.1.

8.3.3.2 Perform a vacuum box (VB) examination of questionable welds to check for leaks.

8.3.4 Refer to Section 10.0 for criteria for Suitability for Continued Service.

COPYRIGHT© 2011 Steel Tank Institute

8.4 Additional requirements for field-erected ASTs are included in Appendix B.

8.5 **REPORT** - In the final report, include field data, measurements, pictures, drawings, tables and an inspection summary. Identify in the summary unacceptable conditions and recommended corrective actions. Determine the suitability for continued service of the AST. Include the time until the next scheduled Formal External and/or Formal Internal Inspection, as applicable. Include the inspector's name and certification number in the report.

9.0 LEAK TESTING METHODS (LTM)

9.1 **SHOP-FABRICATED AST LEAK TESTING PROCEDURE**.

9.1.1 Consult the Steel Tank Institute Recommended Practice R912, *Installation Instructions for Shop Fabricated Stationary Aboveground Storage Tanks for Flammable, Combustible Liquids.* Air shall not be used for a pressure test and an inert gas shall be used instead. The introduction of a gas containing oxygen (such as air) to a tank that has previously held petroleum liquid can pose an explosion hazard.

9.1.2 Vacuum testing of the interstice of double-wall or double-bottom tanks is an option. Refer to the Steel Tank Institute Recommended Practice R912, *Installation Instructions for Shop Fabricated Stationary Aboveground Storage Tanks for Flammable, Combustible Liquids*.

9.2 **PORTABLE CONTAINERS LEAK TESTING PROCEDURE.** Refer to DOT Sections 49 CFR 173.28 (Reuse, reconditioning and remanufacturing of packagings - mainly for drums) and Part 178 - 49 CFR Subpart O - Testing of IBC's (section 178.803 Testing and certification of IBC's) and 49 CFR 180.605, or equivalent, for portable container testing and recertification.

9.2.1 See the definition of Leak Testing Methods for more information.

10.0 SUITABILITY FOR CONTINUED SERVICE

10.1 Evaluation for suitability for continued service is a result of Formal External and/or Internal Inspections performed by a Certified Inspector. This section describes the recommended actions to be taken by the owner as a result of these inspections. These conditions and others found during these inspections may require additional inspections or evaluations.

10.2 **FORMAL EXTERNAL AND INTERNAL INSPECTIONS** (refer to AST categories in Section 5.0)

10.2.1 MIC – For all tanks in Table 5.5, if evidence of MIC is found at any time, then corrections and repairs shall be promptly made to the AST. Refer to Steel Tank Institute SP031 *Standard for Repair of In-Service Shop Fabricated Aboveground Tanks for Storage of Combustible and Flammable Liquids* for alterations or repairs to an AST. Conduct the next Formal External or Formal Internal Inspection no more than two years after the discovery of MIC.

10.2.1.1 When Table 5.5 allows Formal External Inspections to be performed in lieu of Formal Internal Inspections, then conduct the next Formal External Inspection no more than two years after the discovery of MIC.

10.2.1.2 If the re-inspection confirms that MIC has been mitigated due to measures taken to eliminate it, such as regular and careful water removal and sterilization of the tank and piping systems, then the AST may be inspected according to Table 5.5.

10.2.2 Category 3 ASTs - If the shell thickness has been reduced to less than 75% of the original shell thickness, then the AST shall be taken out of service and repaired or replaced. Refer to Steel Tank Institute SP031 *Standard for Repair of Shop Fabricated Aboveground Tanks for Storage of Combustible and Flammable Liquids* for alterations or repairs to an AST. The Certified Inspector shall document in the report that the next Formal External or Formal Internal Inspection shall be within 5 years and each subsequent 5 years thereafter until the condition that caused the tank degradation has been fully corrected. When the tank degradation has been arrested or is in a steady-state condition, then follow the inspection intervals shown in Table 5.5 for subsequent inspections.

10.2.3 Category 2 ASTs – The AST shall be repaired or replaced if more than 3 square inches of any one square foot of the tank shell (i.e. approximately 2%) is found to be less than 75% of the original shell thickness or if the remaining shell thickness of an area is less than 50% of the original shell thickness at any point. Refer to Steel Tank Institute SP031 *Standard for Repair of Shop Fabricated Aboveground Tanks for Storage of Combustible and Flammable Liquids* for

COPYRIGHT© 2011 Steel Tank Institute

alterations or repairs to an AST. The Certified Inspector shall document in the report that the next Formal External or Formal Internal Inspection shall be within 5 years and each subsequent 5 years thereafter until the condition that caused the tank degradation has been fully corrected. When the tank degradation has been arrested or is in a steady-state condition, then follow the inspection intervals shown in Table 5.5 for subsequent inspections.

10.2.4 Category 1 ASTs - The AST shall be repaired or replaced if more than 3 square inches of any one square foot of the tank shell (i.e. approximately 2%) is found to be less than 50% of the original shell thickness or if the remaining shell thickness of an area is less than 25% of the original shell thickness at any point. Refer to Steel Tank Institute SP031 *Standard for Repair of Shop Fabricated Aboveground Tanks for Storage of Combustible and Flammable Liquids* for alterations or repairs to an AST. The Certified Inspector shall document in the report that the next Formal External or Formal Internal Inspection shall be within 5 years and each subsequent 5 years thereafter until the condition that caused the tank degradation has been fully corrected. When the tank degradation has been arrested or is in a steady-state condition, then follow the inspection intervals shown in Table 5.5 for subsequent inspections.

10.2.4.1 For Category 1 ASTs, alternatively, if the Certified Inspector establishes and documents a corrosion rate, the inspector may determine the next Formal External Inspection based upon corrosion rates. The calculated time until the next Formal External Inspection may exceed the values listed in Table 5.5 if corrosion rates allow.

10.2.4.2 Refer to API 575, *Inspection of Atmospheric and Low-Pressure Storage Tanks*, for some acceptable methods of determining corrosion rates.

10.2.4.3 Further, if the shell thickness is reduced anywhere to less than 25% of the original shell thickness, the AST shall be repaired or replaced. Refer to Steel Tank Institute SP031 *Standard for Repair of Shop Fabricated Aboveground Tanks for Storage of Combustible and Flammable Liquids* for alterations or repairs to an AST.

10.3 **OTHER TANK DAMAGE** – An AST subjected to damage caused by the following conditions requires evaluation by an engineer experienced in AST design or by a tank manufacturer who will jointly with the owner determine if an immediate Formal External or Internal Inspection is required:

- Fire - AST exposed to fire or flame impingement
- Natural disaster - AST exposed to flooding, hurricane force winds, etc. and has been lifted or damaged
- Excessive settlement - AST that has experienced excessive settlement
- Overpressure - AST exposed to excessive internal pressure caused by overfill or failure of venting devices or other reason
- Damage from cracking - AST with evidence of cracking of welds or of an AST surface

10.4 If a leak is discovered at any time by the owner or the inspector, the tank must be repaired, replaced or closed and removed from service, in accordance with accepted good engineering practice.

11.0 RECORDKEEPING

11.1 Retain each AST Record for the life of the AST.

11.2 Retain each Monthly Inspection Checklist for at least 36 months.

11.3 Retain each Annual Inspection Checklist for at least 36 months.

11.4 Retain each Portable Container Monthly Inspection Checklist for at least 36 months.

11.5 Retain all certified inspection reports for the life of the AST.

COPYRIGHT© 2011 Steel Tank Institute

REFERENCES

American Petroleum Institute:

- API Standard 341, *A Survey of Diked-area Liner Use at Aboveground Storage Tank Facilities*
- API Standard 575, *Inspection of Atmospheric and Low Pressure Storage Tanks*
- API Standard 650, *Welded Steel Tanks for Oil Storage*
- API Recommended Bulletin D16, *Suggested Procedure for Development of a Spill Prevention Control and Countermeasure Plan*
- API 12R1, *Recommended Practice for Setting, Maintenance, Inspection, Operation and Repair of Tanks in Production Service*
- API Standard 653, *Tank Inspection, Repair, Alteration, and Reconstruction*.
- API RP 2015, *Requirements for Safe Entry and Cleaning of Petroleum Storage Tanks*
- API RP 2016, *Guidelines and Procedures for Entering and Cleaning Petroleum Storage Tanks*

American Society for Nondestructive Testing

- ANSI/ASNT Recommended Practice No. ASNT-TC-1A, *Guideline to Personnel Qualification and Certification in NDT*

National Fire Protection Association:

- NFPA 30, *Flammable and Combustible Liquids*
- NFPA 326, *Standard for the Safeguarding of Tanks and Containers for Entry, Cleaning, or Repair*
- NFPA 780, *Standard for the Installation of Lightning Protection Systems*

Steel Tank Institute:

- SP031, *Standard for Repair of Shop Fabricated Aboveground Tanks for Storage of Combustible and Flammable Liquids*
- STI-R893, *Recommended Practice For External Corrosion Protection of Shop Fabricated Aboveground Tank Floors*
- STI-R912, *Installation Instructions for Shop Fabricated Stationary Aboveground Storage Tanks for Flammable, Combustible Liquids*

Underwriters Laboratories Inc.

- UL 142, *Steel Aboveground Tanks for Flammable and Combustible Liquids*

United States Environmental Protection Agency:

- EPA 40 CFR part 112, *Oil Pollution Prevention and Response; Non-Transportation-Related Onshore and Offshore Facilities*
- EPA 510-K-95-002, *Musts for USTs.A Summary of Federal Regulations for Underground Storage Tank Systems*

United States Department of Labor, Occupational Safety & Health Administration (OSHA)

- 29 CFR Part 1910.147, *The Control of Hazardous Energy (Lockout/Tagout),*
- 29 CFR Part 1910.331 to 1910.333, *Electrical Lockout/Tagout*

United States Department of Transportation

- DOT Sections 49 CFR 173.28, *Reuse, Reconditioning and Remanufacturing of Packaging,*
- DOT part 178-49 CFR Subpart O, *Testing of IBC's*
- DOT 49 CFR part 178.803, *Testing and certification of IBC's*
- DOT 49 CFR part 180.605, *Portable container Testing and Recertification*

COPYRIGHT© 2011 Steel Tank Institute

APPENDIX A
SUPPLEMENTAL TECHNICAL INFORMATION

1.0 TYPICAL AST DIAGRAMS

1.1 The diagram below shows terms commonly associated with ASTs. For the purposes of this Standard, all of these surfaces are called the "shell" of the AST to avoid confusion.

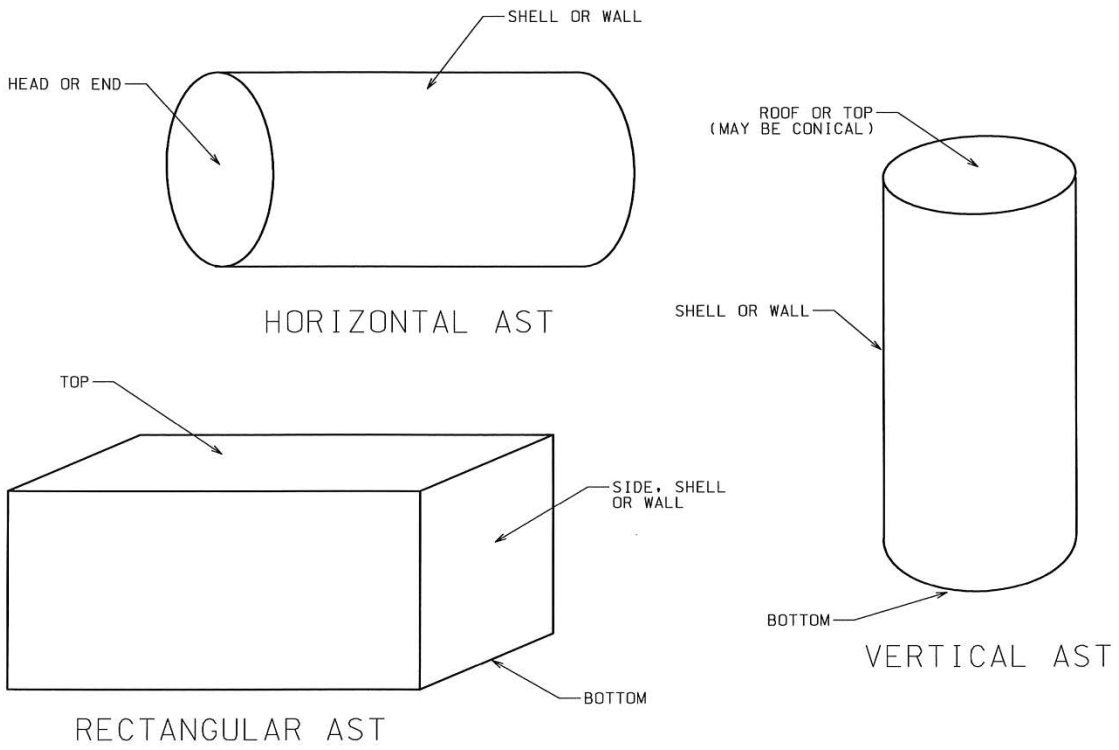

FIGURE A1.1

COPYRIGHT© 2011 Steel Tank Institute

1.2 The diagram below is included to assist in the identification of the appurtenances of an AST. A specific tank may include some or all of these appurtenances.

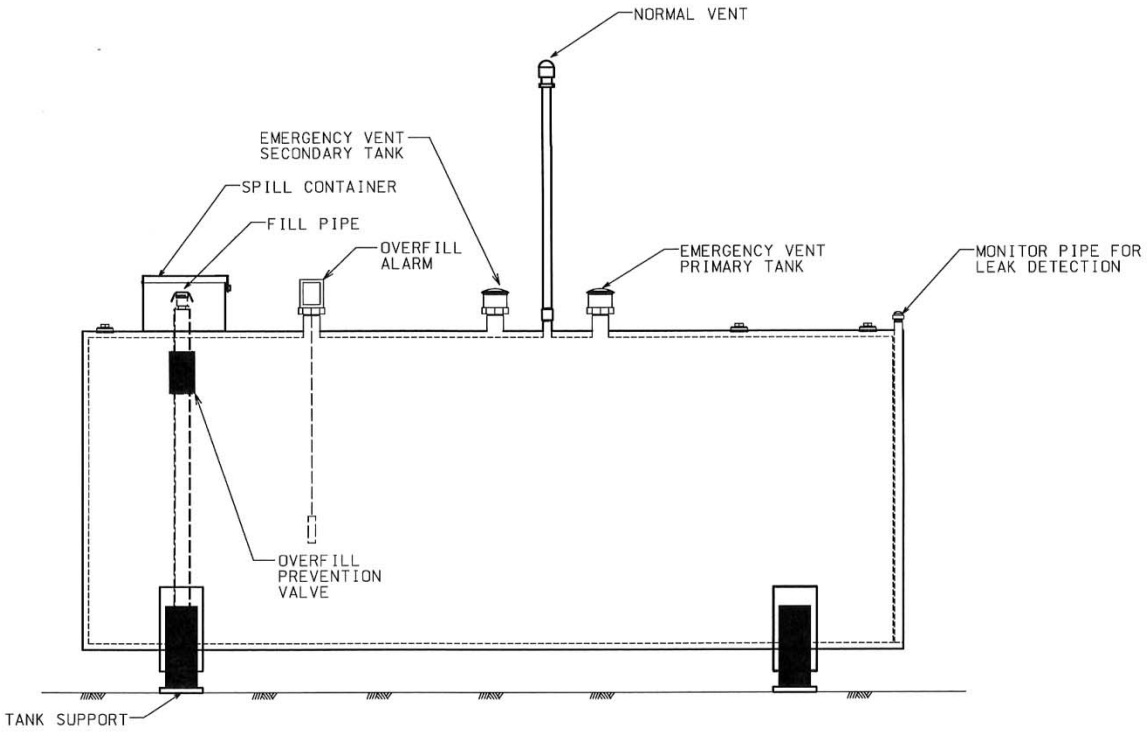

FIGURE A1.2

1.2.1 The purpose of these appurtenances is as follows:

1.2.1.1 Spill container – This tank accessory is designed to catch spills during tank filling operations. It typically has a lockable, hinged lid and allows spilled fluid to drain into the tank.

1.2.1.2 Tank vent – This tank accessory allows air to enter the tank when liquid is being withdrawn and exhausts air when the tank is being filled. This prevents damage to the tank due to too much pressure.

1.2.1.3 Overfill prevention valve – A specially designed device that provides positive shut-off at a predetermined value to prevent overfilling of an AST.

1.2.1.4 Overfill alarm – A device designed to alert personnel who are filling a tank when a predetermined level is reached.

1.2.1.5 Emergency vent (for primary and secondary tank) – These tank accessories prevent damage to the tank by allowing excess pressure to be vented. They are designed to relieve excess pressure in the event of an emergency, such as a fire.

1.2.1.6 Monitor pipe for leak detection –This pipe is installed in the air space (Interstice) between the primary tank and secondary tank of a double-wall tank. It is typically used with leak detection equipment to detect a leak in either the primary or the secondary tank.

1.2.1.7 Tank supports –These structures are used to elevate the tank off the ground.

COPYRIGHT© 2011 Steel Tank Institute

2.0 WATER INSIDE ASTS

2.1 The functional life of an AST can be significantly extended by regularly checking for water accumulation inside an AST and interstice of a double-wall AST and removing it or taking other corrective action.

2.2 Water affects the quality of some stored liquids; therefore, remove the water or take other corrective action on a regular basis.

2.3 Bacteria may develop in the water and in certain stored liquids, such as petroleum liquids, and initiate microbial activity. Microbial activity can cause the formation of undesirable by-products, such as sludge and slime. Such activity will corrode metals and deteriorate plastics and may affect product quality.

3.0 RELEASE MANAGEMENT SYSTEM (RMS)

3.1 One of the basic purposes of AST inspection Standards is to minimize the likelihood and consequences of leaks. Even small leaks over extended periods may have considerable impact on the environment. The use of industry Standards to prevent leaks is a fundamental principle of pollution prevention. Industry Standards cover the tank life cycle from construction, to ongoing inspection and maintenance, to final closure.

3.2 Applying RMS can reduce the likelihood and consequences of leaks. Typically, RMS is applied to provide additional integrity assurance against leaks.

3.3 In the context of this Standard, RMS specifically refers to two basic methodologies as defined below:

- Leak Testing Methods (LTM)
- Continuous Release Detection Methods (CRDM)

3.4 Experience has shown that long-term, slow leaks may develop and cause environmental damage in an AST that is in direct contact with the ground. These types of ASTs are subjected to the full hydrostatic pressure of the liquid on one side of the AST surface and are in direct contact with the ground on the other side of the AST surface. These ASTs may allow a slow leak over a long time with the full liquid hydrostatic pressure, which may go undetected and cause environmental damage. LTM is a layer of protection beyond conventional AST inspection practices that is most effective when applied to ASTs that are in direct contact with the soil and that do not have CRDMs. An LTM is ordinarily *not* necessary for tanks that have CRDMs (continuous release detection methods) such as elevated tanks, double-wall tanks, or tanks with release prevention barriers.

COPYRIGHT© 2011 Steel Tank Institute

3.5 Figure A3.5 shows RMS graphically.

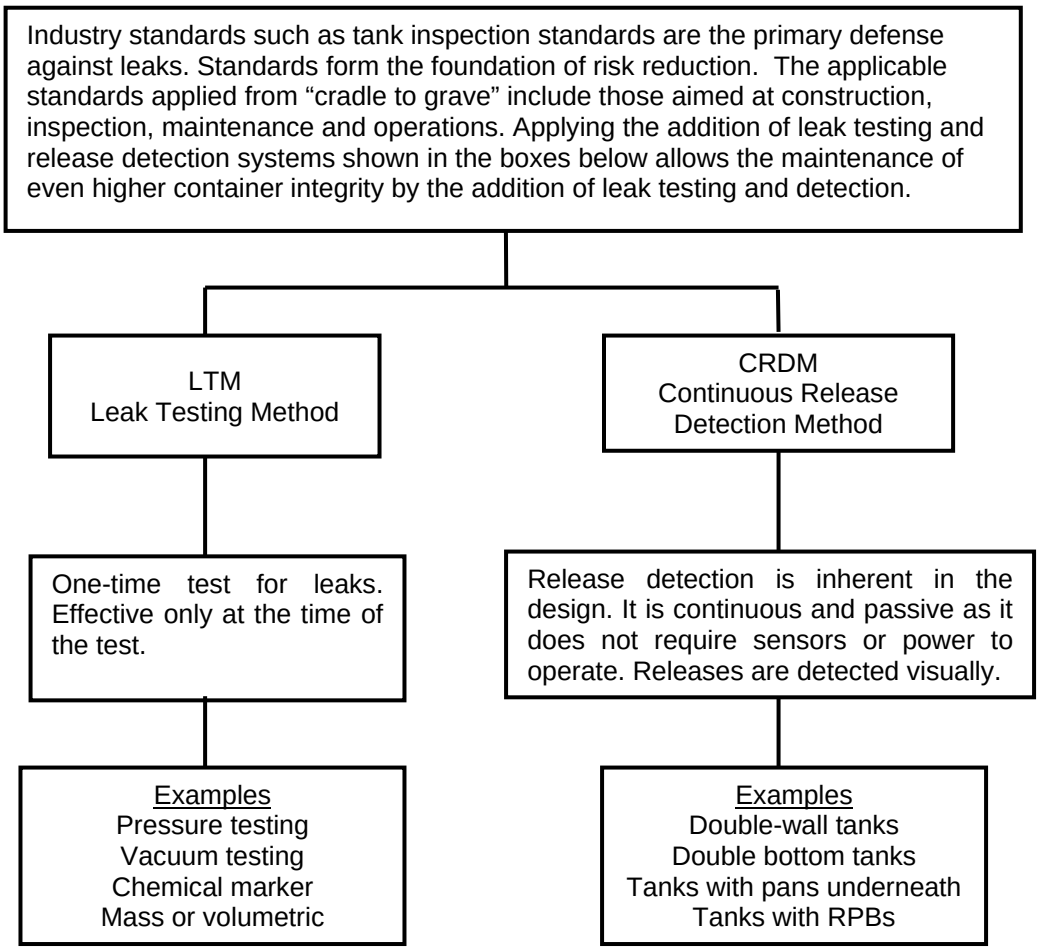

Figure A3.5
Release Detection Systems

4.0 REGULATIONS

4.1 The Federal EPA and some states have enacted regulations regarding the storage and handling of oils, both petroleum and non-petroleum, called the Spill Prevention Control and Countermeasures (SPCC) Rule under the authority of the Clean Water Act (40 CFR part 112). Entities regulated by these sections may use this Standard or others to inspect and determine the fitness of their storage systems. Refer to http://www.epa.gov/oilspill for more information and American Petroleum Institute's (API) Recommended Practice Bulletin D16, *Suggested Procedure for Development of a Spill Prevention Control and Countermeasure Plan.*

COPYRIGHT© 2011 Steel Tank Institute

APPENDIX B
INSPECTION OF FIELD-ERECTED ASTS

1.0 GENERAL

1.1 Purpose and Applicability – This Appendix addresses additional and special inspection requirements for field-erected tanks. Tanks larger than 30 feet (9.1 meters) in diameter or more than 50 feet (15.2 meters) high should be inspected according to an appropriate field-erected tank inspection standard. This Appendix is applicable only when specifically referenced by written contractual language between the owner and the inspector. Further, it is applicable only when not prohibited by the regulatory authority having jurisdiction. This Appendix specifies only those requirements which modify or exceed the requirements of the main body of the Standard.

1.2 Scope - This Appendix applies to steel ASTs that are as follows:

1.2.1 Welded and flat-bottom, cone-up or cone-down design.

1.2.2 Up to 30 feet (9.1 meters) in diameter and with a height of less than 50 feet (15.2 meters).

1.2.3 Fabricated with full-fusion, butt-welded shells and with lap-welded or butt-welded bottom plates.

1.2.4 Fabricated with a shell thickness of each course less than ½ inch and with original nominal bottom thickness plates equal to ¼ inch or 6 mm.

1.2.5 Built to a nationally recognized standard.

1.3 Brittle Fracture Assessment - Because the tank shells are under ½ inch thick, the risk of brittle fracture is minimal. Brittle fracture assessments and documentation are not required for tanks that fall within the scope of this Standard.

2.0 INSPECTIONS

2.1 Refer to the Table B2.1 below for the inspection timetable. Category 1, 2 and 3 as well as the P, E, I and L designations are described in the main body of the SP001 Standard. Note that the internal inspection intervals shown in this table are guiding values when corrosion rates are not determined, in accordance with recognized and accepted industry principles and practice.

2.1.1 When corrosion rates are established, the corrosion rates may govern the internal inspection interval, which may be shorter or longer than the values shown.

2.1.2 For Category 1 tanks, the maximum internal re-inspection interval is 30 years.

2.1.3 For Category 2 tanks, the maximum internal re-inspection interval is 20 years.

2.1.4 For Category 3 tanks, the maximum internal re-inspection interval may not be longer than shown in Table B2.1.

TABLE B2.1 TABLE OF INSPECTION SCHEDULES

AST Type and Size	Category 1	Category 2	Category 3
Field-erected AST	P, E(5), I(10)	P, E&L(5), I(10)	P, E&L(5), I(10)

2.2 Follow the requirements found in the main body of the SP001 Standard for Periodic Inspections, Formal External Inspections and Formal Internal Inspections and any additional requirements in this Appendix. Also, follow all the requirements of the Safety Section. Leak testing methods for field-erected tanks are currently under research by API and STI, and additional requirements will be added to SP001 in the future.

2.3 Below are additional inspection requirements for field-erected ASTs.

2.3.1 Vertical AST Floating Roof

2.3.1.1 For safety, make sure that the roof pontoons are free of liquid and harmful vapors and that the floating roof is properly stabilized against collapse. (See API 2016, *Guidelines and Procedures for*

COPYRIGHT© 2011 Steel Tank Institute

Entering and Cleaning Petroleum Storage Tanks.) Inspect the vapor space on top of the floating roof before gaining access.

2.3.1.2 For Formal Internal Inspections, inspect the seal for deterioration, holes, tears and cracks to determine the Suitability for Continued Service.

2.3.1.3 For external floating roofs, assess the condition of the outer roof rim plate by visual or ultrasonic methods. It may be necessary to assess the condition by performing ultrasonic inspection from the inside of the pontoon. Inspect that either the roof drain is open or the drain plug in the roof is open in case of unexpected rain. Inspect the roof legs for their contact with the floor and that the striker plates are present and in position. Inspect the roof legs for corrosion and damage.

2.3.1.4 Inspect for standing water on top of the roof and inspect the roof drainage system operation. Inspect the pontoons for presence of liquid.

2.4 Suitability for Continued Service

2.4.1 As an alternative to the criteria in the main body of SP001, and if the Certified Inspector is API 653 Certified, then the methods included in API 653 maybe used to evaluate the AST.

2.4.2 The minimum allowable remaining thickness is 0.1 inch (2.54 mm). In setting the next inspection interval based upon corrosion rates, neither the bottom nor the shell shall be allowed to corrode less than 0.1 inch.

2.4.2.1 The minimum required thickness of each shell course shall be according to:

$$t_{\min} = \frac{(H-1)DG}{10{,}000}$$

t_{min} = the minimum acceptable average thickness, in inches, for each course as calculated from the above formula. However, t_{min} shall not be less than 0.1 inch (2.54 mm) for any tank course.

D = nominal diameter of tank, feet.

H = height from the bottom of the shell course under consideration to the maximum liquid level when evaluating an entire shell course, feet.

G = largest specific gravity of the contents.

2.4.3 One method of determining the interval between Formal Internal Inspections required by the tank bottom assessment is as follows: (Corrosion rates shall be assumed constant for these calculations.)

$$MFIII = \frac{\min(RT_{bc}, RT_{ip}) - MRT}{(St\,\mathrm{Pr} + U\,\mathrm{Pr})}$$

MRT = minimum allowable remaining tank bottom thickness at the end of inspection interval which is 0.1 inch (2.54 mm).

MFIII = maximum Formal Internal Inspection interval (years to next internal inspection) not to exceed that allowed in paragraph 2.1 of this Appendix.

RT_{bc} = minimum remaining thickness from bottom side corrosion after repairs.

RT_{ip} = minimum remaining thickness from internal corrosion after repairs.

St Pr = maximum rate of corrosion not repaired on the top side. This value is zero for coated areas of the bottom. The expected life of the coating must equal or exceed MFIII to use *St* Pr = 0.

U Pr = maximum rate of corrosion on the bottom side. To calculate the corrosion rate, use the minimum remaining thickness after repairs. For tanks that have proven cathodic protection, the corrosion rate from the underside shall be *U* Pr = 0.002 inches per year (0.05 mm per year).

COPYRIGHT© 2011 Steel Tank Institute

Note: For areas of a bottom that have been scanned by the magnetic flux leakage (or exclusion) process, and do not have effective cathodic protection, the thickness used for calculating *U* Pr must be the lesser of the MFL threshold or the minimum thickness of corrosion areas that are not repaired. The MFL threshold is defined as the minimum remaining thickness to be detected in the areas inspected. This value should be predetermined by the owner based on the desired inspection interval.

2.4.4 Widely scattered pitting will not appreciably affect the strength of the tank shell and the tank may be allowed to continue operation provided that both of the following conditions are met:

2.4.4.1 Pit depths or thinning (with a diameter or maximum dimension of less than 2 inches (50.8 mm)) does not result in a remaining wall thickness of less than 0.05 inch (1.27 mm).

2.4.4.2 No pit or thinned area results in any area 2 inches (50.8 mm) in diameter or larger with a thickness less than 0.1 inch (2.54 mm).

COPYRIGHT© 2011 Steel Tank Institute

APPENDIX C
PERIODIC INSPECTION CHECKLISTS

COPYRIGHT© 2011 Steel Tank Institute

STI SP001 AST Record

OWNER INFORMATION	FACILITY INFORMATION	INSTALLER INFORMATION
Name	Name	Name
Number and Street	Number and Street	Number and Street
City, State, Zip Code	City, State, Zip Code	City, State, Zip Code

.

TANK ID _____

SPECIFICATION:

Design: ☐ UL _____ ☐ SWRI _____ ☐ Horizontal ☐ Vertical ☐ Rectangular

☐ API _____ ☐ Other _____

☐ Unknown

Manufacturer: Contents: Construction Date: Last Repair/Reconstruction Date:

Dimensions: Capacity: Last Change of Service Date:

Construction: ☐ Bare Steel ☐ Cathodically Protected (Check one: A. ☐ Galvanic or B. ☐ Impressed Current) Date Installed: _____

☐ Coated Steel ☐ Concrete ☐ Plastic/Fiberglass ☐ Other

☐ Double-Bottom ☐ Double-Wall ☐ Lined Date Installed: _____

Containment: ☐ Earthen Dike ☐ Steel Dike ☐ Concrete ☐ Synthetic Liner ☐ Other _____

CRDM: ☐ Date Installed: _____ Type: _____

Release Prevention Barrier: ☐ Date Installed: _____ Type: _____

TANK ID _____

SPECIFICATION:

Design: ☐ UL _____ ☐ SWRI _____ ☐ Horizontal ☐ Vertical ☐ Rectangular

☐ API _____ ☐ Other _____

☐ Unknown

Manufacturer: Contents: Construction Date: Last Repair/Reconstruction Date:

Dimensions: Capacity: Last Change of Service Date:

Construction: ☐ Bare Steel ☐ Cathodically Protected (Check one: A. ☐ Galvanic or B. ☐ Impressed Current) Date Installed: _____

☐ Coated Steel ☐ Concrete ☐ Plastic/Fiberglass ☐ Other

☐ Double-Bottom ☐ Double-Wall ☐ Lined Date Installed: _____

Containment: ☐ Earthen Dike ☐ Steel Dike ☐ Concrete ☐ Synthetic Liner ☐ Other _____

CRDM: ☐ Date Installed: Type:

Release Prevention Barrier: ☐ Date Installed: _____ Type: _____

TANK ID _____

SPECIFICATION:

Design: ☐ UL _____ ☐ SWRI _____ ☐ Horizontal ☐ Vertical ☐ Rectangular

☐ API _____

☐ Unknown ☐ Other _____

Manufacturer: Contents: Construction Date: Last Repair/Reconstruction Date:

Dimensions: Capacity: Last Change of Service Date:

Construction: ☐ Bare Steel ☐ Cathodically Protected (Check one: A. ☐ Galvanic or B. ☐ Impressed Current) Date Installed: _____

☐ Coated Steel ☐ Concrete ☐ Plastic/Fiberglass ☐ Other

☐ Double-Bottom ☐ Double-Wall ☐ Lined Date Installed: _____

Containment: ☐ Earthen Dike ☐ Steel Dike ☐ Concrete ☐ Synthetic Liner ☐ Other _____

CRDM: ☐ Date Installed: Type:

Release Prevention Barrier: ☐ Date Installed: _____ Type: _____

TANK ID _____

SPECIFICATION:

Design: ☐ UL _____ ☐ SWRI _____ ☐ Horizontal ☐ Vertical ☐ Rectangular

☐ API _____

☐ Unknown ☐ Other _____

Manufacturer: Contents: Construction Date: Last Repair/Reconstruction Date:

Dimensions: Capacity: Last Change of Service Date:

Construction: ☐ Bare Steel ☐ Cathodically Protected (Check one: A. ☐ Galvanic or B. ☐ Impressed Current) Date Installed: _____

☐ Coated Steel ☐ Concrete ☐ Plastic/Fiberglass ☐ Other

☐ Double-Bottom ☐ Double-Wall ☐ Lined Date Installed: _____

Containment: ☐ Earthen Dike ☐ Steel Dike ☐ Concrete ☐ Synthetic Liner ☐ Other _____

CRDM: ☐ Date Installed: Type:

Release Prevention Barrier: ☐ Date Installed: _____ Type: _____

TANK ID _____

SPECIFICATION:

Design: ☐ UL _____ ☐ SWRI _____ ☐ Horizontal ☐ Vertical ☐ Rectangular

☐ API _____

☐ Unknown ☐ Other _____

Manufacturer: Contents: Construction Date: Last Repair/Reconstruction Date:

Dimensions: Capacity: Last Change of Service Date:

Construction: ☐ Bare Steel ☐ Cathodically Protected (Check one: A. ☐ Galvanic or B. ☐ Impressed Current) Date Installed: _____

☐ Coated Steel ☐ Concrete ☐ Plastic/Fiberglass ☐ Other

☐ Double-Bottom ☐ Double-Wall ☐ Lined Date Installed: _____

Containment: ☐ Earthen Dike ☐ Steel Dike ☐ Concrete ☐ Synthetic Liner ☐ Other _____

CRDM: ☐ Date Installed: Type:

Release Prevention Barrier: ☐ Date Installed: _____ Type: _____

STI SP001 Monthly Inspection Checklist

General Inspection Information:

Inspection Date: _____ Retain Until Date: _____ (36 months from inspection date)

Prior Inspection Date: _____ Inspector Name: _____

Tanks Inspected (ID #'s): _____

Inspection Guidance:

- For equipment not included in this Standard, follow the manufacturer recommended inspection/testing schedules and procedures.
- The periodic AST Inspection is intended for monitoring the external AST condition and its containment structure. This visual inspection does not require a Certified Inspector. It shall be performed by an owner's inspector who is familiar with the site and can identify changes and developing problems.
- Upon discovery of water in the primary tank, secondary containment area, interstice, or spill container, remove promptly or take other corrective action. Before discharge to the environment, inspect the liquid for regulated products or other contaminants and disposed of it properly.
- (*) designates an item in a non-conformance status. This indicates that action is required to address a problem.
- Non-conforming items important to tank or containment integrity require evaluation by an engineer experienced in AST design, a Certified Inspector, or a tank manufacturer who will determine the corrective action. Note the non-conformance and corresponding corrective action in the comment section.
- Retain the completed checklists for 36 months.
- **In the event of severe weather (snow, ice, wind storms) or maintenance (such as painting) that could affect the operation of critical components (normal and emergency vents, valves), an inspection of these components is required as soon as the equipment is safely accessible after the event.**

Item	Task	Status	Comments
1.0 Tank Containment			
1.1 Containment structure	Check for water, debris, cracks or fire hazard	Yes* No N/A	
1.2 Primary tank	Check for water	Yes* No	
1.3 Containment drain valves	Operable and in a closed position	Yes No* N/A	
1.4 Pathways and entry	Clear and gates/doors operable	Yes No* N/A	
2.0 Leak Detection			
2.1 Tank	Visible signs of leakage	Yes* No	
2.2 Secondary Containment	Visible signs of leakage from tank into secondary containment	Yes* No	
2.3 Surrounding soil	Visible signs of leakage	Yes* No N/A	
2.4 Interstice	Visible signs of leakage	Yes* No N/A	

Item	Task	Status	Comments
3.0 Tank Equipment			
3.1 Valves	a. Check for leaks.	Yes* No N/A	
	b. Tank drain valves must be kept locked.	Yes* No N/A	
3.2 Spill containment boxes on fill pipe	a. Inspect for debris, residue, and water in the box and remove.	Yes* No N/A	
	b. Drain valves must be operable and closed.	Yes* No N/A	
3.3 Liquid level equipment	a. Both visual and mechanical devices must be inspected for physical damage.	Yes No* N/A	
	b. Check that the device is easily readable	Yes No* N/A	
3.4 Overfill equipment	a. If equipped with a "test" button, activate the audible horn or light to confirm operation. This could be battery powered. Replace the battery if needed	Yes No* N/A	
	b. If overfill valve is equipped with a mechanical test mechanism, actuate the mechanism to confirm operation.	Yes No* N/A	
3.5 Piping connections	Check for leaks, corrosion and damage	Yes* No	
4.0 Tank Attachments and Appurtenances			
4.1 Ladder and platform structure	Secure with no sign of severe corrosion or damage?	Yes No* N/A	
5.0 Other Conditions			
5.1 Are there other conditions that should be addressed for continued safe operation or that may affect the site spill prevention plan?		Yes* No	

Additional Comments:

STI SP001 Annual Inspection Checklist

General Inspection Information:

Inspection Date: _____ Retain Until Date: _____ (36 months from inspection date)

Prior Inspection Date: _____ Inspector Name: _____

Tanks Inspected (ID #'s): _____

Inspection Guidance:

- For equipment not included in this Standard, follow the manufacturer recommended inspection/testing schedules and procedures.
- The periodic AST Inspection is intended for monitoring the external AST condition and its containment structure. This visual inspection does not require a Certified Inspector. It shall be performed by an owner's inspector who is familiar with the site and can identify changes and developing problems.
- Remove promptly upon discovery standing water or liquid in the primary tank, secondary containment area, interstice, or spill container. Before discharge to the environment, inspect the liquid for regulated products or other contaminants and disposed of it properly.
- In order to comply with EPA SPCC (Spill Prevention, Control and Countermeasure) rules, a facility must regularly test liquid level sensing devices to ensure proper operation (40 CFR 112.8(c)(8)(v)).
- (*) designates an item in a non-conformance status. This indicates that action is required to address a problem.
- Non-conforming items important to tank or containment integrity require evaluation by an engineer experienced in AST design, a Certified Inspector, or a tank manufacturer who will determine the corrective action. Note the non-conformance and corresponding corrective action in the comment section.
- Retain the completed checklists for 36 months.
- Complete this checklist on an annual basis supplemental to the owner monthly-performed inspection checklists.
- **Note: If a change has occurred to the tank system or containment that may affect the SPCC plan, the condition should be evaluated against the current plan requirement by a Professional Engineer knowledgeable in SPCC development and implementation.**

Item	Task	Status	Comments
1.0 Tank Containment			
1.1 Containment structure	Check for: • Holes or cracks in containment wall or floor • Washout • Liner degradation • Corrosion • Leakage • Paint failure • Tank settling	Yes* No N/A	
2.0 Tank Foundation and Supports			
2.1 Foundation	Settlement or foundation washout?	Yes* No	
2.2 Concrete pad or ring wall	Cracking or spalling?	Yes* No N/A	

Item	Task	Status	Comments
2.3 Supports	Check for corrosion, paint failure, etc.	Yes* No N/A	
2.4 Water drainage	Water drains away from tank?	Yes No* N/A	
2.5 Tank grounding	Strap secured and in good condition?	Yes No* N/A	
3.0 Cathodic Protection			
3.1 Gavlvanic cathodic protection system	Confirm system is functional, includes the wire connections for galvanic systems	Yes No* N/A	
3.2 Impressed current system	a. Inspect the operational components (power switch, meters, and alarms).	Yes No* N/A	
	b. Record hour meter, ammeter and voltmeter readings.	Yes No* N/A	
4.0 Tank Shell, Heads, Roof			
4.1 Coating	Check for coating failure	Yes* No	
4.2 Steel condition	Check for: • Dents • Buckling • Bulging • Corrosion • Cracking	Yes* No	
4.3 Roof slope	Check for low points and standing water	Yes* No N/A	
5.0 Tank Equipment			
5.1 Vents	Verify that components are moving freely and vent passageways are not obstructed for: • Emergency vent covers • Pressure/vacuum vent poppets • Other moving vent components	Yes* No	

Item	Task	Status	Comments
5.2 Valves	Check the condition of all valves for leaks, corrosion and damage.	Yes* No	
5.2.1 Anti-siphon, check and gate valves	Cycle the valve open and closed and check for proper operation.	Yes No* N/A	
5.2.2 Pressure regulator valve	Check for proper operation. (Note that there may be small, 1/4 inch drain plugs in the bottom of the valve that are not visible by looking from above only)	Yes No* N/A	
5.2.3 Expansion relief valve	Check that the valve is in the proper orientation. (Note that fuel must be discharged back to the tank via a separate pipe or tubing.)	Yes No* N/A	
5.2.4 Solenoid valves	Cycle power to valve to check operation. (Electrical solenoids can be verified by listening to the plunger opening and closing. If no audible confirmation, the valve should be inspected for the presence and operation of the plunger.)	Yes No* N/A	
5.2.5 Fire and shear valves	a. Manually cycle the valve to ensure components are moving freely and that the valve handle or lever has clearance to allow valve to close completely.	Yes No* N/A	
	b. Valves must not be wired in open position.	Yes No* N/A	

Item	Task	Status	Comments
	c. Make sure fusible element is in place and correctly positioned.	Yes No* N/A	
	d. Be sure test ports are sealed with plug after testing is complete and no temporary test fixture or component remains connected to valve.	Yes No* N/A	
5.3 Interstitial leak detection equipment	Check condition of equipment, including: • The window is clean and clear in sight leak gauges. • The wire connections of electronic gauges for tightness and corrosion • Activate the test button, if applicable.	Yes No* N/A	
5.4 Spill containment boxes on fill pipe	a. If corrosion, damage, or wear has compromised the ability of the unit to perform spill containment functions, replace the unit.	Yes* No N/A	
	b. Inspect the connections to the AST for tightness, as well as the bolts, nuts, washers for condition and replace if necessary.	Yes* No N/A	
	c. Drain valves must be operable and closed	Yes* No N/A	
5.5 Strainer	a. Check that the strainer is clean and in good condition.	Yes No* N/A	

Item	Task	Status	Comments
5.5 Strainer	b. Access strainer basket and check cap and gasket seal as well as bolts.	Yes No* N/A	
5.6 Filter	a. Check that the filter is in good condition and is within the manufacturer's expected service life. Replace, if necessary.	Yes No* N/A	
	b. Check for leaks and decreased fuel flow	Yes No* N/A	
5.7 Flame arrestors	Follow manufacturer's instructions. Check for corrosion and blockage of air passages.	Yes* No N/A	
5.8 Leak detector for submersible pump systems	Test according to manufacturer's instructions and authority having jurisdiction (AHJ). Verify leak detectors are suited and properly installed for aboveground use.	Yes No* N/A	
5.9 Liquid level equipment	a. Has equipment been tested to ensure proper operation?	Yes No* N/A	
	b. Does equipment operate as required?	Yes No* N/A	
	c. Follow manufacturer's instructions	Yes No* N/A	
5.10 Overfill equipment	a. Follow manufacturer's instructions and regulatory requirements for inspection and functionality verification.	Yes No* N/A	
	b. Confirm device is suited for above ground use by the manufacturer	Yes No* N/A	

Item	Task	Status	Comments
6.0 Insulated Tanks			
6.1 Insulation	Check condition of insulation for: • Missing sections • Areas of moisture • Mold • Damage	Yes* No N/A	
6.2 Insulation cover or jacket	Check for damage that will allow water intrusion	Yes* No N/A	
7.0 Miscellaneous			
7.1 Electrical wiring and boxes	Are they in good condition?	Yes No* N/A	
7.2 Labels and tags	Ensure that all labels and tags are intact and readable.	Yes No* N/A	

Additional Comments:

STI SP001 Portable Container Monthly Inspection Checklist

General Inspection Information:

Inspection Date: _____ Retain Until Date: _____ (36 months from inspection date)

Prior Inspection Date: _____ Inspector Name: _____

Containers Inspected (ID #'s): _____

Inspection Guidance:

- For equipment not included in this Standard, follow the manufacturer recommended inspection/testing schedules and procedures.
- The periodic AST Inspection is intended for monitoring the external AST condition and its containment structure. This visual inspection does not require a Certified Inspector. It shall be performed by an owner's inspector who is familiar with the site and can identify changes and developing problems.
- (*) designates an item in a non-conformance status. This indicates that action is required to address a problem.
- Non-conforming items important to tank or containment integrity require evaluation by an engineer experienced in AST design, a Certified Inspector, or a tank manufacturer who will determine the corrective action. Note the non-conformance and corresponding corrective action in the comment section.
- Retain the completed checklists for 36 months.

Item	Area: _____		Area: _____		Area: _____		Area: _____	
1.0 AST Containment/Storage Area								
1.1 ASTs within designated storage area?	Yes	No*	Yes	No*	Yes	No*	Yes	No*
1.2 Debris, spills, or other fire hazards in containment or storage area?	Yes*	No	Yes*	No	Yes*	No	Yes*	No
1.3 Water in outdoor secondary containment?	Yes*	No	Yes*	No	Yes*	No	Yes*	No
1.4 Drain valves operable and in a closed position?	Yes	No*	Yes*	No	Yes*	No	Yes*	No
1.5 Egress pathways clear and gates/doors operable?	Yes	No*	Yes*	No	Yes*	No	Yes*	No

Item	Area: _____	Area: _____	Area: _____	Area: _____
2.0 Leak Detection				
2.1 Visible signs of leakage around the container or storage area?	Yes* No	Yes* No	Yes* No	Yes* No
3.0 Container				
3.0 Noticeable container distortions, buckling, denting or bulging?	Yes* No	Yes* No	Yes* No	Yes* No

Comments:

DISCLAIMER

Although the information in this document is believed accurate and reliable, STI and its committee members make no warranties, express or implied, including NO IMPLIED WARRANTY OF MERCHANTABILITY OR FITNESS FOR A PARTICULAR PURPOSE, as to any of the ideas, information or guidance in this Standard. STI and its committee members warn that the types of work described herein should be left to trained professionals. Federal, state and municipal laws, regulations and ordinances should be consulted. STI and its committee members shall not be liable in the event of any conflict between this Standard and such laws, regulations and ordinances. In no event, whether as a result of breach of warranty, breach of contract, negligence or otherwise, shall STI and its committee members be liable for any loss or damage, including without limitation, any special, incidental, indirect or consequential damage resulting from the use of or reliance on this Standard.

This Standard may be revised or withdrawn at any time without prior notice. This Standard does not necessarily address all of the applicable health and safety risks and precautions with respect to particular materials, conditions or procedures. Information concerning safety and health risks and precautions should be obtained from the applicable standards, regulations, suppliers of materials or material safety data sheets.

COPYRIGHT© 2011 Steel Tank Institute

APPENDIX 21

KENTUCKY UST GUIDANCE MEMO

Appendix 21

Guidance Document Regarding Underground Storage Tanks
Kentucky Regulations

Amendments to 401 KAR Chapter 42 became effective as of Sept. 13, 2006. These regulatory amendments affect both the technical and reimbursement aspects of the UST program.

Note - Links to documents are in PDF format unless otherwise noted.

401 KAR 42:005 - Definitions

401 KAR 42:011 - Scope of UST program

401 KAR 42:020 - Design, construction, installation and registration

- UST Facility Registration Form, DEP7112 (August 2006) in PDF or Word
- Certificate of Registration and Reimbursement Eligibility, DEP 7113 (August 2006)
- Interior Lining Inspection Form, DEP 8050 (August 2006)

401 KAR 42:030 - General operating requirements

- Galvanic (Sacrificial Anode) Cathodic Protection System Evaluation, DEP 8052, (January 2006)
- Impressed Current Cathodic Protection System Evaluation, DEP 8053, (January 2006)
- 60-Day Record of Rectifier Operation for Impressed Current Cathodic Protection System, DEP 8054, (January 2006)
- Outline for the Evaluation of Underground Storage Tank Cathodic Protection System

401 KAR 42:040 - UST system release detection

- Site Assessment Outline for External UST System Release Detection Methods (Groundwater, Vapor and Interstitial Monitoring) (August 2006)
- External UST System Release Detection Well Form, DEP Form 8051 (January 2006)

401 KAR 42:050 - Release reporting, investigation and confirmation

401 KAR 42:060 - UST system release response and corrective action for USTs containing petroleum or hazardous materials

- Site Check Outline, (August 2006)
- Site Investigation Outline, (August 2006)
- Corrective Action Plan Outline, (August 2006)
- UST System Release Response and Initial Abatement Requirements Outline, (August 2006)
- Site Investigation Checklist Form, DEP 8049 (August 2006)

401 KAR 42:070 - Out-of-service UST systems, temporary closure and permanent closure of UST systems, and change-in-service of UST systems

- Closure Outline (August 2006)
- Notice of Intent to Permanently Close Underground Storage Tank System, DEP 7114, (January 2006) in PDF or Word

- Closure Assessment Form, DEP 8055 (August 2006) in PDF or Word
- American Petroleum Institute Recommended Practice 1604, "Closure of Underground Petroleum Storage Tanks," (Reaffirmed 2001)
- American Petroleum Institute Recommended Practice 1631, "Interior Lining and Periodic Inspection of Underground Storage Tanks," (June 2001)
- American Petroleum Institute Publication 2015, "Requirements for Safe Entry and Cleaning of Petroleum Storage Tanks," (August 2001)

The documents published by the American Petroleum Institute can be accessed through the Institute's Web site.

401 KAR 42:080 - Classification of UST systems containing petroleum and listing of associated cleanup levels

- Classification Outline, (August 2006)
- Classification Guide, DEP 8056, (January 2006) in PDF or Word
- Affected Property Owner Consent Form, DEP 8057, (January 2006)
- Kentucky Guidance for Ambient Background Assessment, (January 2004)

401 KAR 42:090 - Financial responsibility

401 KAR 42:200 - UST owner registration fees

401 KAR 42:250 - Petroleum Storage Tank Environmental Assurance Fund reimbursement procedures

- Application for Assistance, DEP 6063, (August 2006) in PDF or Word
- Claim Request Form, DEP 6064, (January 2006) in PDF or Word
- Invoice Listing Form, DEP 6065, (January 2006) in PDF or Word
- Capital Equipment Claim Form, DEP 6070, (January 2006) in PDF or Word
- Capital Equipment Preapproval Purchase/Rental Request, DEP 6071, (January 2006) in PDF or Word
- Payment Verification Affidavit, DEP 6075, (January 2006) in PDF or Word
- Payment Waiver Form, DEP 6077, (January 2006) in PDF or Word
- Environmental Response Team Declared Emergency worksheet, DEP 6066A, (August 2006); Form DEP 6066A Instructions
- Initial Abatement & Free Product Recovery worksheet, DEP 6066B, (August 2006); Form DEP 6066B Instructions
- Initial and Intermediate Site Investigation and Site Check for Facilities worksheet, DEP 6066C, (August 2006); Form DEP 6066C Instructions
- Final Site Investigation for a Facility worksheet, DEP 6066D, (August 2006); Form DEP 6066D Instructions
- Over-Excavation worksheet, DEP 6066E, (August 2006); Form DEP 6066E Instructions
- Quarterly Monitoring Reports and System Maintenance worksheet, DEP 6066G, (August 2006); Form DEP 6066G Instructions
- Miscellaneous Tasks worksheet, DEP 6066H, (August 2006); Form DEP 6066H Instructions
- Facility Restoration worksheet, DEP 6066I, (August 2006); Form DEP 6066I Instructions
- Third Party Claim Form, DEP 6078 (January 2006) in PDF or Word
- Contactor Cost Outline (August 2006)

Guidance Document Regarding Underground Storage Tanks

401 KAR 42:290 - Ranking system

401 KAR 42:300 - Third-party claims

401 KAR 42:314 - Contractor certification for individuals

- Certified Contractor Application, DEP 6072, (January 2006) in PDF or Word

401 KAR 42:316 - Certification of contracting companies

- Certified Company or Partnership Application, DEP 6073, (January 2006) in PDF or Word

401 KAR 42:320 - Hearings (not amended in 2006)

401 KAR 42:330 - Small Owners' Tank Removal Account

- SOTRA Application for Assistance, DEP 6067 (August 2006) in PDF or Word
- SOTRA Claim Request, DEP 6068, (January 2006)

401 KAR 42:335 - Financial audits

401 KAR 42:340 - Laboratory certification

- Application for Laboratory Certification, DEP 6074, (January 2006) in PDF or Word

The American Association for Laboratory Accreditation, "Kentucky Underground Storage Tank Laboratory Accreditation Program Requirements," (September 2005)

Underground Storage Tank Branch
81 C. Michael Davenport Boulevard
Frankfort, KY 40601
Phone: 502-564-5981
Fax: 502-564-0094
E-mail: chip.mullins@ky.gov
E-mail: trenede.garrison@ky.gov

APPENDIX 22

GPP MEMOS

- **GPP GUIDANCE**
- **GPP CONTENT GUIDANCE**

PREPARING A GROUNDWATER PROTECTION PLAN

Revised June 2008

This guidance document is based on 401 KAR 5:037, Section 3(3) (a) through (g).

The activities that require the development and implementation of a Groundwater Protection Plan (GPP) are listed in Section 2, pages 4-6, of the regulation. Read this section thoroughly and note any of the listed activities that are or will be conducted at your site. You will want to read Section 2(3) and 2(4) to determine whether any of your activities may be excluded from the GPP requirement.

All the activities conducted at your site that require a GPP must be included in one GPP. Paper copies of Cabinet-written generic groundwater protection plans are available from the GPP Program or may be downloaded from the GPP Program Web site for the following activities:

1. On-site residential septic system
2. Domestic water well
3. Monitoring well
4. Water well driller
5. Home heating oil

Go to http://water.ky.gov/gw/gwprotection/gwplans. Click on Generic GPPs in the left-hand side bar. Fact sheets and mini-guidances are also listed in the left-hand side bar. The regulation and guidance may be accessed by clicking on the underlined words in the information on the right-hand side. If your facility operates an onsite septic system, water well, or monitoring well, you must include them in your GPP. To adapt the practices in the generic GPP to your particular GPP, contact Pat Keefe, Coordinator, GPP Program at (502) 564-3410 for instructions.

SITE SPECIFIC VS GENERIC GPPS

You are STRONGLY ADVISED to develop a site specific GPP, even if there are numerous facilities operating under one corporate name.

Site Specific GPPs

- are tailored to the site for which they are developed
- are not required to be submitted to the GPP Program for review, unless called in by a DEP inspector or the GPP Program Coordinator, or as a requirement in an Agreed Order

Generic GPPs

- must be approved by the EEC Cabinet prior to start up of the activity
- must be public noticed in two publications of widespread distribution
- must undergo a 30 day public comment period following public notification

USING THE GUIDANCE

Follow the Guidance Format.

Follow the format provided in the guidance to develop your GPP. Using this format will assure that most, if not all, of the information the GPP Program deems necessary for adequate review is included. It also organizes the information so that any member of the general public who asks to read your plan can follow it without needing additional explanation.

Use all Headings and Subheadings as stated in the Guidance.

Do not make up your own headings or subheadings. Use the headings and subheadings in the order provided in the guidance. Do not combine headings or leave out headings.

Provide all Information requested in the Guidance, where applicable.

Be sure that you have provided the information requested. The review process is delayed when necessary information has been omitted.

Do not reference SPCC or KPDES Best Management Practices (BMPs) Plans.

The GPP cannot contain broad referrals to SPCC or KPDES Stormwater BMP Plans. However, the practices in those plans that are protective of groundwater may be used in the GPP. See Section C of this guidance, 2nd bullet, page 4.

There are three special conditions that must be met in order to incorporate a program by reference. They are listed in Section C in this guidance.

The GPP must stand alone. The GPP may be a separate section or chapter in other BMP plans, but it must contain all the information required for a GPP. It cannot be included in bits and pieces throughout another BMP plan.

WHEN YOU HAVE COMPLETED THE GPP……

When you have completed your plan, review the draft to be sure that the GPP has addressed **all** the activities occurring at your site that are covered by the Groundwater Protection Plan Regulation and that you have provided **all** the information, where applicable, for each section.

Implement your GPP!

To be in compliance with 401 KAR 5:037 the GPP must be implemented **immediately** following development. This applies to **all** GPPs, even when a GPP is submitted to the GPP Program for review. Implementation does not depend upon approval by the Coordinator of the GPP Program. If your GPP is in review, continue to implement the practices in the submitted GPP. If changes are required, then the new practices should be implemented.

Submitting the GPP

Submittal of a site specific GPP for review by the GPP Program is optional unless:

1. required as part of an Agreed Order
2. stated by a DEP inspector as a requirement in a Notice of Violation
3. called in by letter by the Coordinator of the GPP Program.

To submit your GPP for review and approval, send one (1) copy of the GPP to Patricia Keefe, Coordinator, Groundwater Protection Plan Program, Watershed Management Branch, Kentucky Division of Water, 14 Reilly Road, Frankfort KY 40601. You will receive a letter stating that the GPP has been received.

Your initial GPP submittal and any further drafts **will not** be returned. Be sure you keep a copy of each draft so that required changes can be made. The approved draft will be retained in the GPP Program files. You will receive a letter stating the GPP has been approved.

It is not necessary to include the Groundwater Protection Regulation or this guidance document with the GPP when submitting it to the GPP Program for review.

If you have any questions, please contact Patricia Keefe, Coordinator, GPP Program, Watershed Management Branch, Kentucky Division of Water, 502/564-3410.

Section A. GENERAL INFORMATION

1. Name and Address of Facility

   a. Facility Name
   b. Facility Address
   c. County
   d. Latitude and longitude in degrees, minutes, and seconds
   e. Mailing Address of Facility, if different from Facility Address
   f. If facility is oil/gas production site, provide:
      1. Division of Oil & Gas permit numbers for ALL producing wells.
      2. Division of Water registration number for facility.

2. Person Developing GPP

   a. Name
   b. Address (business address, not home address unless business operates out of the home)
   c. Telephone Number (business phone, not home phone unless business operates out of the home)

3. Person Responsible for Implementing GPP

   a. Name
   b. Address (business address)
   c. Telephone Number

4. Location of Facility on Topographic Map

   Only a United States Geological Survey topographic map will be accepted. Copy the 8 1/2 x 11 inch section of the map that contains the location of your facility. Do not enlarge or reduce the size of the map. If that section does not have the name of the topographic quadrangle, please write it on the map. Mark your facility location with an X.

5. Brief Description of Facility Operation

Section B. ACTIVITIES THAT HAVE THE POTENTIAL TO POLLUTE GROUNDWATER

- In this section **list** all the activities that are conducted at your facility that require a GPP.

- List actual activities; do not quote the regulation.

  Say: store diesel fuel in 1,000-gallon underground storage tank.
  Don't say: "Storing, treating, disposing, or related handling of hazardous waste…….in tanks, drums, or other containers, or in piles."

- Include all activities at your site subject to the regulation, even if protective practices are already being implemented.

  For example, if an aboveground storage tank (AST) has secondary containment, it still must be listed as an activity subject to 401 KAR 5:037.

- Give complete details about aboveground and underground tanks, including

  1. Number of each type of tank
  2. Capacity of each tank
  3. Identification of contents of each tank

- Details about practices to protect groundwater should be addressed in the next section. The following is a **sample** listing of activities.

  1. Store diesel fuel in 500-gallon aboveground storage tank (AST)
  2. Operate septic system (constructed wetland or sewage lagoon)
  3. Apply fertilizer and herbicides to maintain golf course
  4. Store gasoline in 10,000-gallon underground storage tank (UST)

Section C. PRACTICES SELECTED TO PROTECT GROUNDWATER FROM POLLUTION

- For each activity listed in Section B, briefly describe the practice that will be used to protect groundwater. See Section 3(4)(a) through (p) and 5(a) through (e), pages 7-8 of 401 KAR 5:037 for the variety of types of practices that may be used. Note that (p) enables you to use other practices to protect groundwater that are not listed in Section 4.

- Practices given in SPCC or KPDES Best Management Plans may be used in the GPP provided that they are protective of groundwater. If you incorporate practices or information from those plans, you MUST state page numbers and sections in those plans in which those practices/information are found, and include the SPCC or BMP Plan.

- The Best Management Practices (BMPs) or practices you select must be described. Simply stating that BMPs will be used is too vague. You must briefly describe the practice and tell how it will protect groundwater.

- Information about secondary containment for ASTs must include the kind of material (metal, concrete, asphalt, compacted clay or dirt) making up the floor and berms (sides) of the containment area.

- If there is no secondary containment for an AST, state so.

- If any of your activities listed in Section B are regulated under another program, you may incorporate by reference the groundwater protection practices you are required to use by that program.

- There are special conditions that must be met to incorporate by reference. Only programs that meet **all 3** of the following conditions may be incorporated by reference. These conditions are :

    1. management and design standards;
    2. mandatory monitoring for groundwater pollution or leak detection methods; and
    3. a specific corrective action plan. (401 KAR 537, Section 3(7)(a) and (b).

- USTs are regulated by the Underground Storage Tanks Program. The practices required by this program are to be incorporated by reference. To do so, follow exactly the format below:

    a. Cite the UST regulation you're governed by.
    b. State that this regulation specifically requires the following:
        1. management and design standards;
        2. mandatory monitoring for groundwater pollution or leak detection methods; and
        3. a specific corrective action plan.
    c. The person responsible for implementing the plan must sign a statement that the facility is in compliance with the regulation cited in (a) above. Use the certification statement below:

    I (typed name) certify that this facility is in compliance with (regulation) .

    Signature
    Date

    Use the format shown above for incorporating protective practices of other programs. Be sure to replace the UST regulation with that of the regulation of the program being incorporated by reference.

Section D. IMPLEMENTATION SCHEDULE

- The GPP must be implemented immediately. Implementation does NOT depend upon approval of the GPP.

    Having a GPP, cabinet-approved or not, on file in an office somewhere does **NOT** keep a facility in compliance with 401 KAR 5:037. The GPP **must be** retained and implemented at the site for which it was developed.

- If all protective practices are already being implemented, state so. If protective equipment or devices (secondary containment structures, new ASTs with double walls and overfill alarms, etc.) must be ordered or built within budget constraints, list what is to be done and prospective date by which the protective practice will be completed.

Section E. EMPLOYEE TRAINING

- You are developing a Groundwater Protection Plan; therefore, training must focus on groundwater protection.

- Training must include educating the employees about the importance of groundwater protection.

  Training must include all aspects of the GPP. Briefly describe topics to be covered in training the employees about groundwater protection practices.

- State the frequency of training sessions—initial and refresher sessions. Be specific, such as initially on hire and biannually or annually. “When needed” or “frequently” are too vague.

Section F. INSPECTION SCHEDULE

Inspections are conducted to insure that the practices selected to prevent groundwater pollution are being used and are properly functioning.

- State the frequency of the inspections (daily, monthly, quarterly, etc.) and what is to be inspected.

- Include an Inspection Checklist showing what is to be inspected, date, observations, actions taken, if any. This checklist is documentation that you are implementing the GPP.

Section G. CERTIFICATION STATEMENT

- The person who can make the managerial and/or financial decisions that are required to implement your plan should be the one signing the certification statement.

- Use the following certification statement verbatim.

  I (typed name) certify that this Groundwater Protection Plan complies with the requirements of 401 KAR 5:037. I have read the terms of the plan and will implement its provisions.

Signature
Date

Section H. REVIEW LOCATION FOR GROUNDWATER PROTECTION PLAN

Section 4(7) of 401 KAR 5:037 provides for public inspection of GPPs (See pages 11-12). Should you choose to designate the Kentucky Division of Water, 14 Reilly Road, Frankfort, or any site other than the facility location for public review, a copy of the recertified GPP must be sent to the GPP Program or other site every three years, or whenever recertification is required by a change in activities being conducted.

Appendix 22.2

Preparing a GROUNDWATER PROTECTION PLAN

By including everything described in this outline, with details, your GPP will be in compliance with 401 KAR 5:037***.***

Date of Plan

Section A. GENERAL INFORMATION

1. Name, Address and Location of Facility or Project
2. Name and contact information of Person Developing GPP
3. Name(s) and contact information Person(s) Responsible for Implementing GPP and authorized representative
4. Brief Description of Project or Facility

Section B. ACTIVITIES THAT HAVE THE POTENTIAL TO POLLUTE GROUNDWATER

- List all the activities that are conducted at your facility that require a GPP.
- Include details.

Section C. PRACTICES SELECTED TO PROTECT GROUNDWATER FROM POLLUTION

- For each activity listed in Section B, briefly describe the practice (Best Management Plan) that will be used to protect groundwater.
- Include details.
- If any of your activities listed in Section B are regulated under another program, you may incorporate them by reference.

Section D. IMPLEMENTATION SCHEDULE

- The GPP must be implemented immediately.
- If all protective practices are being implemented already, state so. If protective equipment or devices must be ordered or built, list what is to be done and prospective date by which the protective practice will be completed.

Section E. EMPLOYEE TRAINING

- Briefly describe topics to be covered in training the employees about groundwater protection practices.
- State the frequency of training sessions; be specific.

Section F. INSPECTION SCHEDULE

- State the frequency of the inspections and what is to be inspected.
- Include an Inspection Checklist, and save all inspections. This documents that you are following your GPP.

Section G. CERTIFICATION STATEMENT

I, _____, certify that this Groundwater Protection Plan complies with the requirements of 401 KAR 5:037. I have read the terms of the plan and will implement its provisions.

Signature _____

Date _____

Guidance Document Regarding Underground Storage Tanks

Section H. RECORD RETENTION REQUIREMENT

- Specify how public requests for viewing your GPP will be handled.
- Retain the GPP and all compliance records for 6 years.

*Remember to review your entire GPP every 3 years and revise your plan at any time changes occur.

Review of Groundwater Protection Plans (GPPs)

Field Review by Kentucky Division of Water

State inspectors may periodically conduct a field review to make sure you have a complete and acceptable GPP located where it can be of use.

Formal Review by Kentucky Division of Water

If you wish, you may submit your GPP to the Groundwater Section in Frankfort. If your GPP is technically complete and acceptable as protective of the groundwater for the activities described at your site or project, you will receive a letter to that effect.

If the GPP you submit is not acceptable, you will receive information describing what it needs to make it acceptable, and then you may make the corrections and resubmit it if desired.

Note that the submittal of your GPP for review and approval is optional unless required by:

- a Department for Environmental Protection Inspector or program,
- the GPP Program, or
- an Agreed Order.

The outline shown on the reverse side is the MINIMUM information that a Groundwater Protection Plan must include to be considered complete and within regulation.

Any GPP not containing this minimum information is considered incomplete and is in violation of 401 KAR 5:037.

We can help!

Ask questions, or submit your GPP, to susan.mallette@ky.gov, direct line 502-782-7006, switchboard 502-564-3410.

Groundwater Protection Plan Program

Watershed Management Branch

Division of Water

300 Sower Boulevard, Third Floor

Frankfort, KY 40601

Keyword: "KY GPP"

APPENDIX 23

CURRENT SAFETY DATA SHEETS

Appendix 23

CURRENT MATERIAL SAFETY DATA SHEETS

A complete listing of MSDS's is available on line at:

http://hq.msdsonline.com/eku/Search/Default.aspx

and is linked from the EKU Facilities Services web page:

http://www.facilities.eku.edu

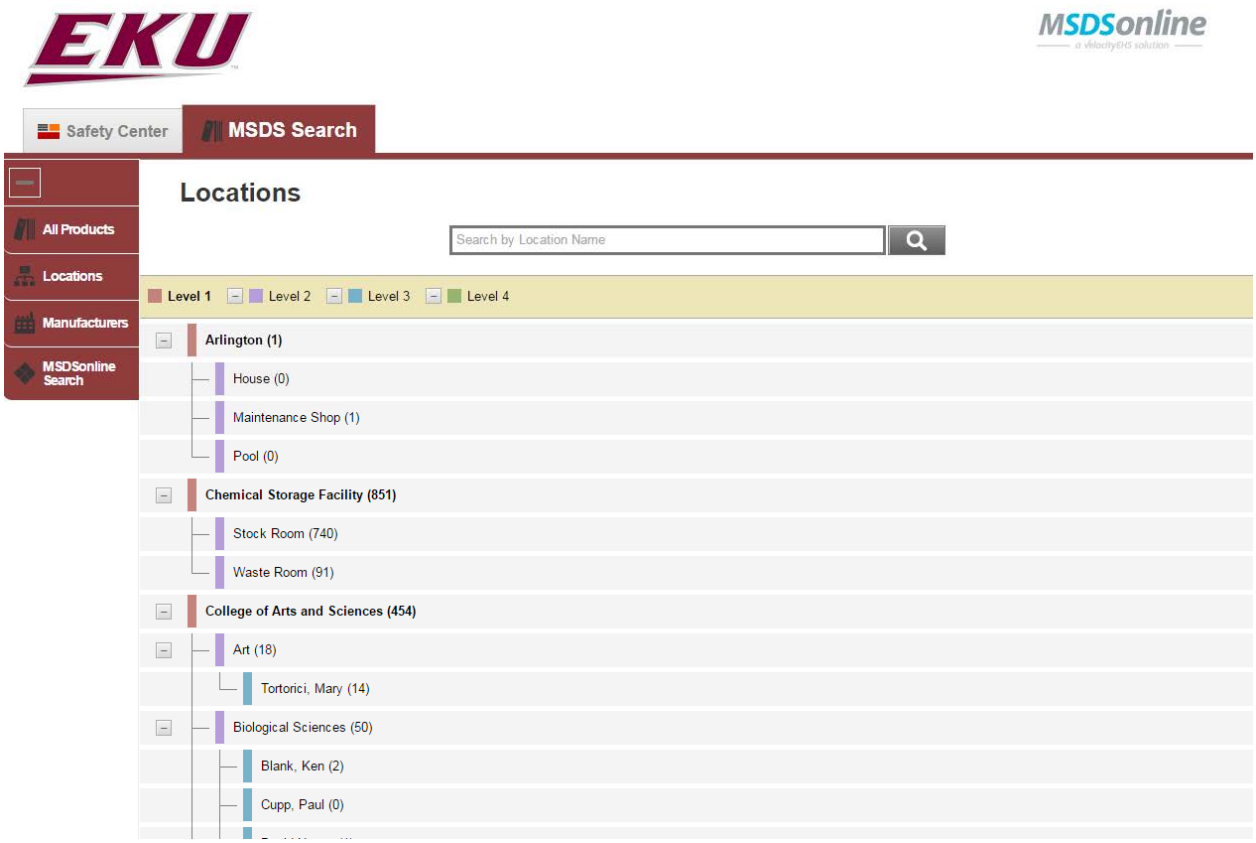

APPENDIX 24

SPILL CONTRACTOR LETTER(S) OF AGREEMENT

PECCO, Inc.

Environmental and Industrial Services!

PERDUE ENVIRONMENTAL CONTRACTING COMPANY INC.

250 Etter Drive
Nicholasville, KY 40356

● *Phone: 859-887-5508* ● *Toll Free: 877-543-9590* ● *Fax: 859-887-5610*

October 5, 2016

Mr. Bill Rhodes
Assistant Director Facilities Services
Environmental Resources & Energy Management
Eastern Kentucky University
CPO 6A1/521 Lancaster Avenue
Richmond, KY 40475

RE: EMERGENCY RESPONSE SERVICES – LETTER OF INTENT

Dear Bill:

This letter confirms the mutual agreement between Eastern Kentucky University and PECCO, Inc. (a.k.a. Perdue Environmental Contracting Company Inc) for PECCO to provide Emergency Spill Response Services to EKU. Please be assured that our personnel have been properly trained to handle virtually any situation that might occur at your plant and will be properly equipped to respond to your need.

Should an emergency occur, please call our toll free number (877-543-9590) to report the incident. Our people are on call 24/7/365. A PO # is NOT required for us to mobilize and respond.

While all of us hope there is never a need for these types of services, we are ready to respond should a need arise. If you have any questions or need anything else from me or our company, please give me a call.

Best regards,

Bob Goetz
Sales & Marketing Manager

Cc: Scottie Perdue
William Grimes

APPENDIX 25

REGULATORY COMPLIANCE PLAN CHECKLISTS

Appendix 25

Regulatory Compliance Checklists

The combined spill response plan for this facility has been prepared to address the following regulatory requirements applicable to this location:

- GPP – Groundwater Pollution Prevention Plan – Required by Kentucky 401 KAR 5:037
- SPCC – Spill Prevention Control and Countermeasures Plan – Required by 40 CFR 112

The following charts identify the regulatory requirements that must be included in the Combined Plan to satisfy the requirements of each regulatory program (GPP & SPCC). Also included in these charts is the location in the Plan Document corresponding to the referenced regulatory requirement that must be in the plan.

REQUIREMENT FOR GPP PLAN

Kentucky GPP Requirements (401 KAR 5:037)

Citation	Description of Rule	Plan Section		
A	General Information			
A.1	Name and Address of Facility	2.1	2.2	2.4
A.2	Person Developing GPP	2.8		
A.3	Person Responsible for Implementing GPP	2.6		
A.4	Location of Facility on Topographic Map	Appx 1 Figure 1		
A.5	Brief Description of Facility Operation	2.3	4.0	
B	Activities that have the potential to pollute groundwater			
B.1	Activity List	3.1.2	4.0	Appx 3.2
B.2	Description of Each Tank	4.0	Appx 3.2	
B.3	Capacity of Each Tank	4.0	Appx 3.2	
B.4	Contents of Each Tank	4.0	Appx 3.2	
C	Practices selected to protect groundwater from pollution			
C.1	Specific practice to protect groundwater or	9.0		
C.2	SPCC or KPDES Practices to protect groundwater	9.0		
C.3	BMP Practices to protect groundwater	9.0		
C.4	Secondary containment specifics – type, size, material, compatibility	Appx 3.2		
C.5	Regulations incorporated by reference (other standards) as long as the following are met	3.0		

Appendix 25

Regulatory Compliance Checklists

Citation	Description of Rule	Plan Section		
C.6	Design standards / monitoring of groundwater or leak detection / corrective action plan	Appx 7		
C.7	UST's including regulation, above design / detection / CAP, and UST Certification Statement	Appx 7	9.1	Appx 21
D	Implementation Schedule			
D.1	Implement immediately	3.1.2		
D.2	Describe actions completed and implementation schedule for non-complete actions	11.0	12.5	
E	Employee Training			
E.1	Specific training for GPP Plan	7.0	7.2.1	
E.2	Agenda on protection practices	7.0		
E.3	Frequency of training	7.0	7.2.1	
F	Inspection Schedule			
F.1	Frequency of inspection	6.4		
F.2	Inspection checklist of what is inspected and actions taken	6.4	Appx 5	
G	GPP Certification Statement			
G.1	Management official	12.5		
G.2	Verbatim statement	12.5		
H	Review Location for Groundwater Protection Plan			
H.1	Identify location of plan	3.3		

Appendix 25

Regulatory Compliance Checklists

REQUIREMENT FOR SPCC PLAN
Federal SPCC Requirements (40 CFR 112.XXX)

Citation	Description of Rule	Plan Section		
§112.1	General applicability	3.1		
§112.3	Requirements to prepare, implement, and PE Certification of Plan	3.2	12.3	
§112.4	Amendment of Plan by Regional Administrator	3.2.2		
§112.5	Amendment of Plan by Owner/Operator	3.2.3		
§112.7	General requirements for SPCC Plans for all facilities and all oil types	4.0		
§112.7(a)	General requirements; discussion of facility's conformance with rule requirements; deviations from Plan requirements; facility characteristics that must be described in the Plan; spill reporting information in the Plan; emergency procedures.	4.0		
§112.7(b)	Fault analysis	10.0		
§112.7(c)	Secondary containment	5.0	Appx 3.2	
§112.7(d)	Contingency planning	6.0		
§112.7(e)	Inspections, tests, and records	3.3	Appx 5	
§112.7(f)	Employee training and discharge prevention procedures	8.0		
§112.7(g)	Security (excluding oil production facilities)	2.9		
§112.7(h)	Loading/unloading (excluding offshore facilities)	9.8		
§112.7(i)	Brittle fracture evaluation requirements	9.9		
§112.7(j)	Conformance with State requirements	5.0		
§112.8	Requirements for onshore facilities (excluding production facilities)	5.0		
§112.8(a)	General and specific requirements	5.0		
§112.8(b)	Facility drainage	2.5		
§112.8(c)	Bulk storage containers	5.0	Appx 3.2	Appx 7.1
§112.8(d)	Facility transfer operations, pumping, and facility process	9.0		
§112.8(d)	General applicability	3.1	12.3	